MIC2786/MIC2787

Push-Button Reset IC with Voltage Supervisor

General Description

The MIC2786/MIC2787 are low-current, ultra-small, push-button supervisor reset ICs with an integrated supply voltage monitor. The device features two manual reset inputs and two reset outputs. The reset outputs are asserted and held when the supply voltage decreases below the factory programmed threshold voltage. Reset will be asserted for the reset timeout delay once the supply voltage increases above the rising threshold voltage or when both manual reset inputs are asserted low for longer than the setup delay time.

The MIC2786 features integrated pull-up resistors on the /MR0 and /MR1 inputs, while the MIC2787 requires external pull-up resistors. The PDY input pin selects between a 2s, 4s or 6s setup period. Factory-programmed reset timeout delays of 140ms (min.) and 240ms (min.) are available. An active-low, open-drain reset output (/RST) and an active-high, push-pull reset output (RSTP) provide flexibility when interfacing to various microcontrollers, PMICs, or load switches.

The MIC2786/MIC2787 consume a quiescent current of only 7.4µA and are offered in a tiny, space saving 8-pin Thin MLF® (2mm x 2mm x 0.55mm) package.

Data sheets and support documentation can be found on Micrel's web site at: www.micrel.com.

Features

- 1.6V to 5.5V operating voltage
- 7.4µA supply current when /MR0, /MR1 not asserted
- 1.66V to 4.63V preset voltage threshold options
- 2.5% voltage threshold accuracy over temperature
- Asserting /MR0 and /MR1 for the setup delay time asserts reset output for the reset timeout delay
- Programmable delay (PDY) input selects 2s, 4s or 6s setup delay
- Factory-programmed 140ms (min.) or 240ms (min.) reset timeout delay
- Integrated /MR0, /MR1 pull-up resistors (MIC2786)
- Dual reset outputs:
  - Open-drain, active-low reset output (/RST)
  - Push-pull, active-high reset output (RSTP)
- –40°C to +85°C ambient operating temperature range
- 8-pin 2mm x 2mm x 0.55mm Thin MLF® package

Applications

- Smart phones
- Tablets
- Set-top boxes (STB)

Typical Application

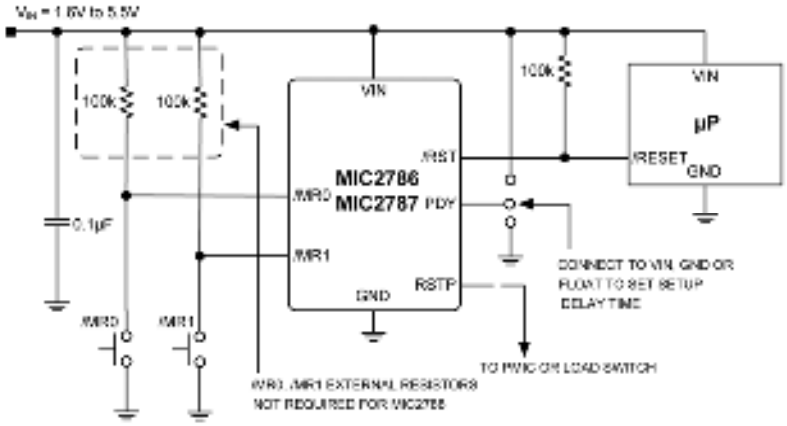

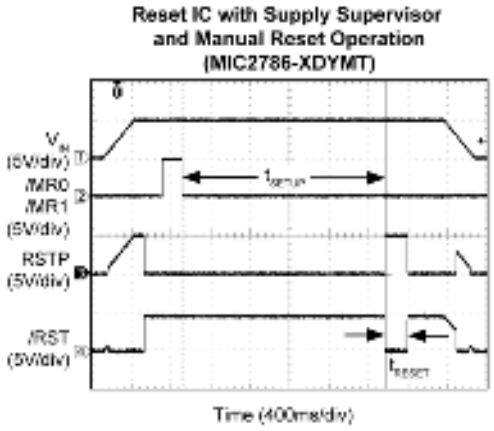

MLF and *Micro*LeadFrame are registered trademarks of Amkor Technologies, Inc.

Ordering Information [1]

Part Number	Marking	Minimum t_{RESET} (ms)	Nominal Threshold Voltage	Package [3,4]	Integrated Pull-Up Resistors
MIC2786-XAYMT	6XA	140	4.625	8-Pin (2mm × 2mm) Thin MLF®	Yes
MIC2786-YAYMT[2]	6YA	240	4.625	8-Pin (2mm × 2mm) Thin MLF®	Yes
MIC2786-XBYMT[2]	6XB	140	4.375	8-Pin (2mm × 2mm) Thin MLF®	Yes
MIC2786- YBYMT[2]	6YB	240	4.375	8-Pin (2mm × 2mm) Thin MLF®	Yes
MIC2786- XCYMT[2]	6XC	140	3.075	8-Pin (2mm × 2mm) Thin MLF®	Yes
MIC2786-YCYMT[2]	6YC	240	3.075	8-Pin (2mm × 2mm) Thin MLF®	Yes
MIC2786-XDYMT[2]	6XD	140	2.925	8-Pin (2mm × 2mm) Thin MLF®	Yes
MIC2786-YDYMT[2]	6YD	240	2.925	8-Pin (2mm × 2mm) Thin MLF®	Yes
MIC2786-XEYMT[2]	6XE	140	2.625	8-Pin (2mm × 2mm) Thin MLF®	Yes
MIC2786-YEYMT[2]	6YE	240	2.625	8-Pin (2mm × 2mm) Thin MLF®	Yes
MIC2786-XFYMT[2]	6XF	140	2.313	8-Pin (2mm × 2mm) Thin MLF®	Yes
MIC2786-YFYMT[2]	6YF	240	2.313	8-Pin (2mm × 2mm) Thin MLF®	Yes
MIC2786-XGYMT[2]	6XG	140	2.188	8-Pin (2mm × 2mm) Thin MLF®	Yes
MIC2786-YGYMT[2]	6YG	240	2.188	8-Pin (2mm × 2mm) Thin MLF®	Yes
MIC2786-XHYMT[2]	6XH	140	1.665	8-Pin (2mm × 2mm) Thin MLF®	Yes
MIC2786-YHYMT[2]	6YH	240	1.665	8-Pin (2mm × 2mm) Thin MLF®	Yes
MIC2787-XAYMT[2]	7XA	140	4.625	8-Pin (2mm × 2mm) Thin MLF®	No
MIC2787-YAYMT[2]	7YA	240	4.625	8-Pin (2mm × 2mm) Thin MLF®	No
MIC2787-XBYMT[2]	7XB	140	4.375	8-Pin (2mm × 2mm) Thin MLF®	No
MIC2787-YBYMT[2]	7YB	240	4.375	8-Pin (2mm × 2mm) Thin MLF®	No
MIC2787-XCYMT[2]	7XC	140	3.075	8-Pin (2mm × 2mm) Thin MLF®	No
MIC2787-YCYMT[2]	7YC	240	3.075	8-Pin (2mm × 2mm) Thin MLF®	No
MIC2787-XDYMT	7XD	140	2.925	8-Pin (2mm × 2mm) Thin MLF®	No
MIC2787-YDYMT[2]	7YD	240	2.925	8-Pin (2mm × 2mm) Thin MLF®	No
MIC2787-XEYMT[2]	7XE	140	2.625	8-Pin (2mm × 2mm) Thin MLF®	No
MIC2787-YEYMT[2]	7YE	240	2.625	8-Pin (2mm × 2mm) Thin MLF®	No
MIC2787-XFYMT[2]	7XF	140	2.313	8-Pin (2mm × 2mm) Thin MLF®	No
MIC2787-YFYMT[2]	7YF	240	2.313	8-Pin (2mm × 2mm) Thin MLF®	No
MIC2787-XGYMT[2]	7XG	140	2.188	8-Pin (2mm × 2mm) Thin MLF®	No
MIC2787-YGYMT[2]	7YG	240	2.188	8-Pin (2mm × 2mm) Thin MLF®	No
MIC2787-XHYMT[2]	7XH	140	1.665	8-Pin (2mm × 2mm) Thin MLF®	No
MIC2787-YHYMT[2]	7YH	240	1.665	8-Pin (2mm × 2mm) Thin MLF®	No

Notes:

1. All devices available in Tape and Reel only.
2. Contact Factory for availability.
3. Thin MLF® ▲ = Pin 1 identifier.
4. Thin MLF® is a Green RoHS-compliant package. Lead finish is NiPdAu. Mold compound is Halogen Free.

Pin Configuration

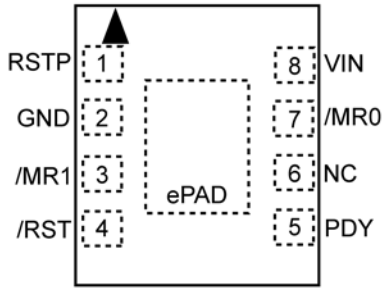

MIC2786/MIC2787
8-Pin (2mm × 2mm) Thin MLF®
Top View

Pin Description

Pin Number	Pin Name	Pin Function
1	RSTP	Active-High Push-Pull Reset Output. This output changes from low-to-high when VIN drops below the selected reset threshold or both manual reset pins are pulled low for the setup delay period. RSTP remains high for the reset timeout delay after VIN exceeds the reset threshold plus hysteresis voltage or the setup delay period has elapsed.
2	GND	Supply Ground.
3	/MR1	Active-Low Manual Reset Input. The MIC2786 has an internal 65kΩ pull-up resistor to VIN, while the MIC2787 requires an external pull-up resistor to VIN if used with a push button. Pull this pin low to assert and force a reset. Pulling both manual reset inputs low for the setup delay time causes one reset output pulse for the reset timeout delay period. Connect to VIN if unused, do not leave floating.
4	/RST	Active-Low Open-Drain Reset Output. This output changes from high-to-low when VIN drops below the selected reset threshold or both manual reset pins are pulled low for the setup delay period. /RST remains low for the reset timeout delay after VIN exceeds the reset threshold or the setup delay has elapsed and it requires an external pull-up resistor.
5	PDY	Programmable Delay Input with Tri-State Connection. When left open, setup delay is 2s, when connected to GND, setup delay is 4s and when connected to VIN, setup delay is 6s.
6	NC	No Connect. Leave pin floating.
7	/MR0	Active Low Manual Reset Input. The MIC2786 has an internal 65kΩ pull-up resistor to VIN, while the MIC2787 requires an external pull-up resistor to VIN if used with a push button. Pull this pin low to assert and force a reset. Pulling both manual reset inputs low for the setup delay time causes one reset output pulse for the reset timeout delay period. If unused, connect to VIN; do not leave floating.
8	VIN	Supply Voltage Pin. It is the input to the Supply Voltage monitor. When the supply voltage falls below the reset threshold voltage, reset outputs (/RST and RSTP) are triggered immediately. When the supply voltage rises above the reset threshold plus hysteresis voltage, the reset outputs remain asserted for the duration of the reset timeout delay. A minimum 0.1µF decoupling ceramic capacitor must be connected between VIN and GND close to the pins.
EPAD	EPAD	Exposed Pad. Connect to GND.

Absolute Maximum Ratings[1]

Supply Voltage (V_{IN}) ..... –0.3V to +6.0V
Reset Input Voltage (/MR0, /MR1). ..... –0.3V to V_{IN}+0.3V
Open Drain Reset Output (/RST) ..... –0.3V to +6.0V
Push-Pull Reset Output (RSTP)..... –0.3V to V_{IN}+0.3V
Tri-State Programmable Delay (PDY)..... –0.3V to V_{IN}+0.3V
Lead Temperature (soldering, 10s)..... 260°C
Junction Temperature (T_J) ..... –40°C to +150°C
Storage Temperature (Ts)..... –55°C to +150°C
ESD Rating (Human Body Model) [3] 2kV
ESD Rating (Machine Model) [3] 300V

Operating Ratings[2]

Supply Voltage (V_{IN})..... +1.6V to +5.5V
Reset Input Voltage (/MR0, /MR1)..... 0V to V_{IN}
Open Drain Reset Output (/RST)..... 0V to +5.5V
Push-Pull Reset Output (RSTP) ..... 0V to V_{IN}
Tri-State Programmable Delay (PDY)..... 0V to V_{IN}
Ambient Temperature (T_A) ..... –40°C to +85°C
Junction Thermal Resistance
2mm × 2mm Thin MLF® (θ_{JA})..... 90°C/W

Electrical Characteristics[4]

V_{IN} = 3.0V, T_A = 25°C, **Bold** values indicate –40°C ≤ T_A ≤ +85°C; unless noted otherwise.

Parameter	Conditions	Min.	Typ.	Max.	Units
Power Supply Input					
Supply Voltage (V_{IN})		**1.6**		**5.5**	V
Supply Current (I_{VIN})	V_{IN} = 5V; /MR0, /MR1, /RST, RSTP, and PDY open		7.9	**12.5**	µA
	V_{IN} = 3V; /MR0, /MR1, /RST, RSTP, and PDY open		7.4		
Reset Threshold Voltage					
Reset Threshold Voltage (V_{TH})	A (falling) T_A = 25°C	4.533	4.625	4.718	V
	A (falling) –40°C ≤ T_A ≤ +85°C	**4.509**	4.625	**4.741**	
	B (falling) T_A = 25°C	4.288	4.375	4.463	
	B (falling) –40°C ≤ T_A ≤ +85°C	**4.266**	4.375	**4.484**	
	C (falling) T_A = 25°C	3.014	3.075	3.137	
	C (falling) –40°C ≤ T_A ≤ +85°C	**2.998**	3.075	**3.152**	
	D (falling) T_A = 25°C	2.867	2.925	2.984	
	D (falling) –40°C ≤ T_A ≤ +85°C	**2.852**	2.925	**2.998**	
	E (falling) T_A = 25°C	2.573	2.625	2.678	
	E (falling) –40°C ≤ T_A ≤ +85°C	**2.559**	2.625	**2.691**	
	F (falling) T_A = 25°C	2.267	2.313	2.359	
	F (falling) –40°C ≤ T_A ≤ +85°C	**2.255**	2.313	**2.371**	
	G (falling) T_A = 25°C	2.144	2.188	2.232	
	G (falling) –40°C ≤ T_A ≤ +85°C	**2.133**	2.188	**2.243**	
	H (falling) T_A = 25°C	1.632	1.665	1.698	
	H (falling) –40°C ≤ T_A ≤ +85°C	**1.623**	1.665	**1.707**	

Electrical Characteristics [4] (Continued)

V_{IN} = 3.0V, T_A = 25°C, **Bold** values indicate –40°C ≤ T_A ≤ +85°C; unless noted otherwise.

Parameter	Conditions	Min.	Typ.	Max.	Units
Hysteresis Voltage (V_{HYST})	A, B		0.5		%
Hysteresis Voltage (V_{HYST})	C, D, E, F, G, H		1.0		%
Reset Time					
Setup Delay (t_{SETUP})	PDY = Open	**1.6**	2.0	**2.4**	s
	PDY = 0V	**3.2**	4.0	**4.8**	s
	PDY = V_{IN}	**4.8**	6.0	**7.2**	s
Reset Timeout Delay (t_{RESET})	Option X	**140**	220	**280**	ms
	Option Y	**240**	350	**480**	ms
Reset Outputs (/RST, RSTP)					
Reset Output Voltage Low (/RST Output and RSTP Output) (V_{OL})	V_{IN} = 4.5V, I_{SINK} = 3.2mA			**0.3**	V
	V_{IN} = 3.3V, I_{SINK} = 2.5mA			**0.3**	
	V_{IN} = 1.6V, I_{SINK} = 1.0mA			**0.3**	
Reset Output Voltage High (RSTP Output) (V_{OH})	V_{IN} = 4.5V, I_{SOURCE} = 0.8mA	**0.8 × V_{IN}**			V
	V_{IN} = 2.7V, I_{SOURCE} = 0.5mA	**0.8 × V_{IN}**			
	V_{IN} = 1.6V, I_{SOURCE} = 250µA	**0.8 × V_{IN}**			
/RST Output Leakage (I_{LO})	$V_{/RST}$ = 5.5V			**0.3**	µA
Manual Reset Inputs (/MR0, /MR1)					
Input High Voltage (V_{IH})		**1.2**			V
Input Low Voltage (V_{IL})				**0.3**	V
Internal Pull-Up Resistor (R_{PU})	MIC2786 only		65		kΩ
Leakage Current /MR0, /MR1 Pin (I_{MR})	/MR0, /MR1 inputs; MIC2787 only	**–1.0**		**1.0**	µA
Programmable Setup Delay Input (PDY)					
Input Bias Current PDY Pin (I_{PDY})	PDY = V_{IN}, /MR0 = /MR1 = 0V		+60		µA
	PDY = V_{IN}, /MR0 = V_{IN} or /MR1= V_{IN}		100		nA
	PDY = 0V, /MR0 = /MR1 = 0V		-60		µA
	PDY = 0V, /MR0 = V_{IN} or /MR1 = V_{IN}		100		nA

Notes:

1. Exceeding the absolute maximum rating may damage the device.
2. The device is not guaranteed to function outside its operating rating.
3. Devices are ESD sensitive. Handling precautions recommended. Human body model, 1.5kΩ in series with 100pF.
4. Specification for packaged product only.

Typical Characteristics

V_{IN} Supply Current vs. Temperature (PDY = OPEN)

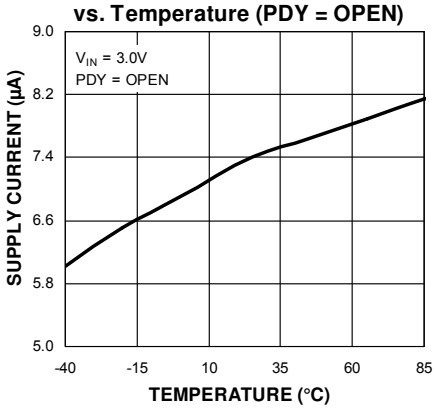

Setup Delay vs. Temperature (PDY = OPEN)

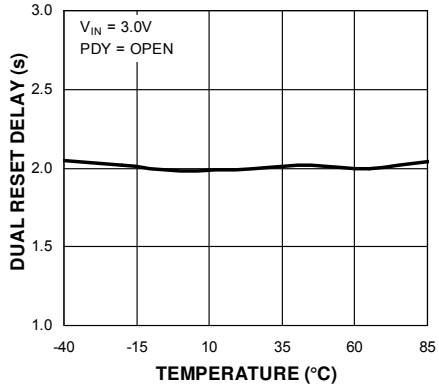

Reset Timeout Delay (Option X) vs. Temperature (PDY = OPEN)

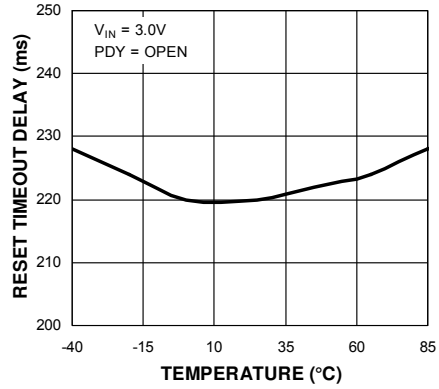

V_{IN} Supply Current vs. Temperature (PDY = 0V)

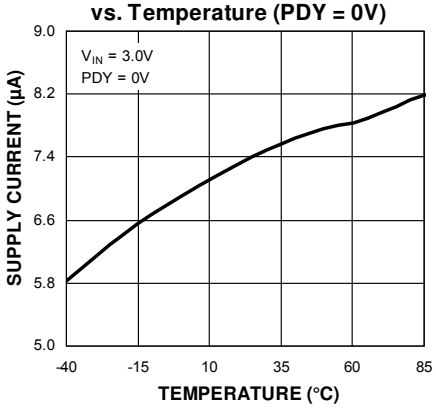

Setup Delay vs. Temperature (PDY = 0V)

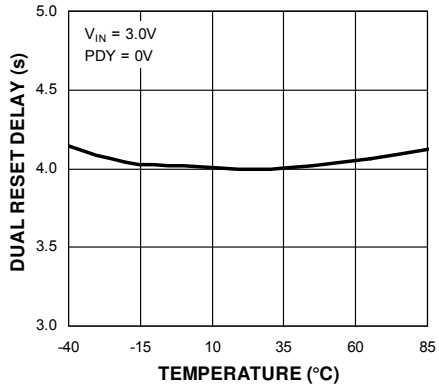

Reset Timeout Delay (Option X) vs. Temperature (PDY = 0V)

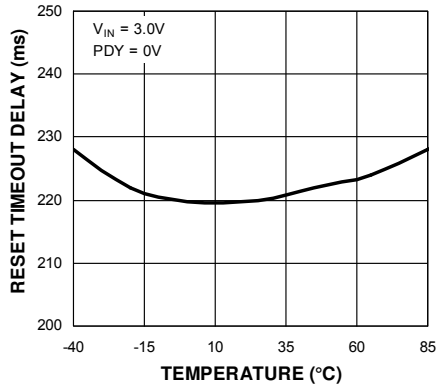

V_{IN} Supply Current vs. Temperature (PDY = V_{IN})

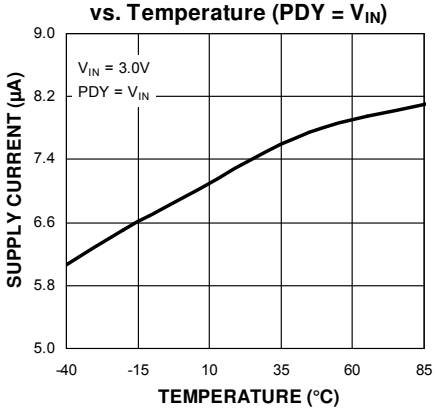

Setup Delay vs. Temperature (PDY = V_{IN})

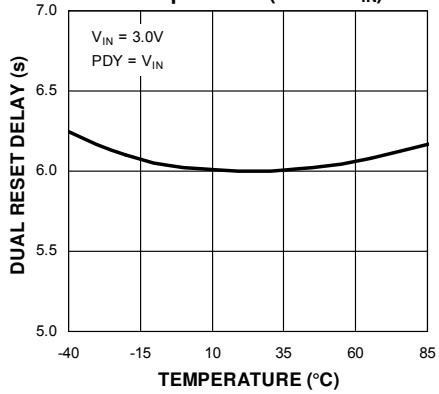

Reset Timeout Delay (Option X) vs. Temperature (PDY = V_{IN})

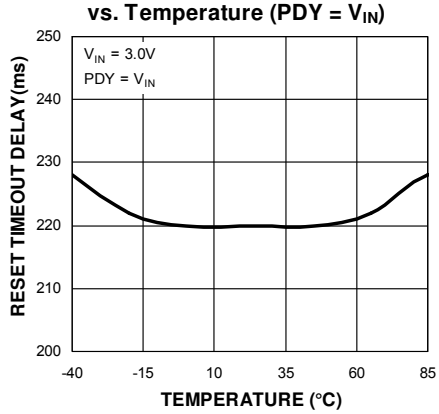

Typical Characteristics (Continued)

V_{IN} Supply Current vs. Input Voltage

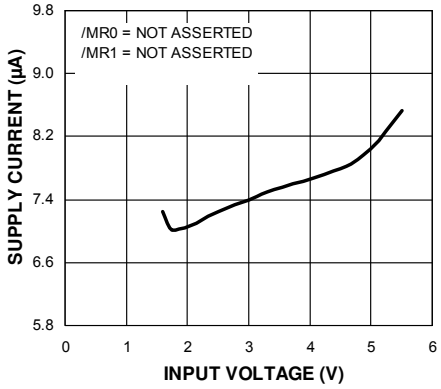

Setup Delay vs. Input Voltage

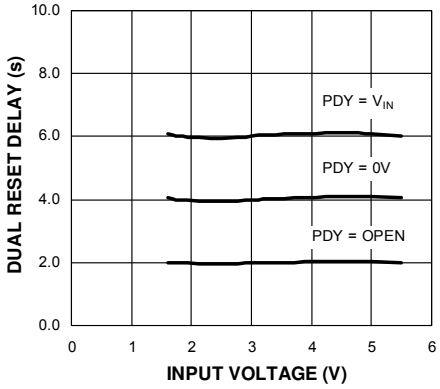

Reset Timeout Delay (Option X) vs. Input Voltage

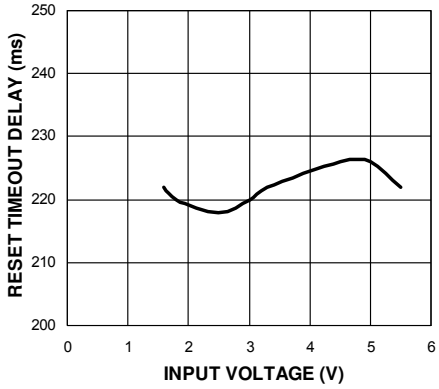

Normalized Reset Threshold vs. Temperature

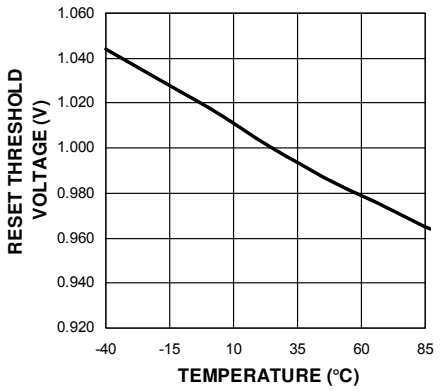

Timing Diagram

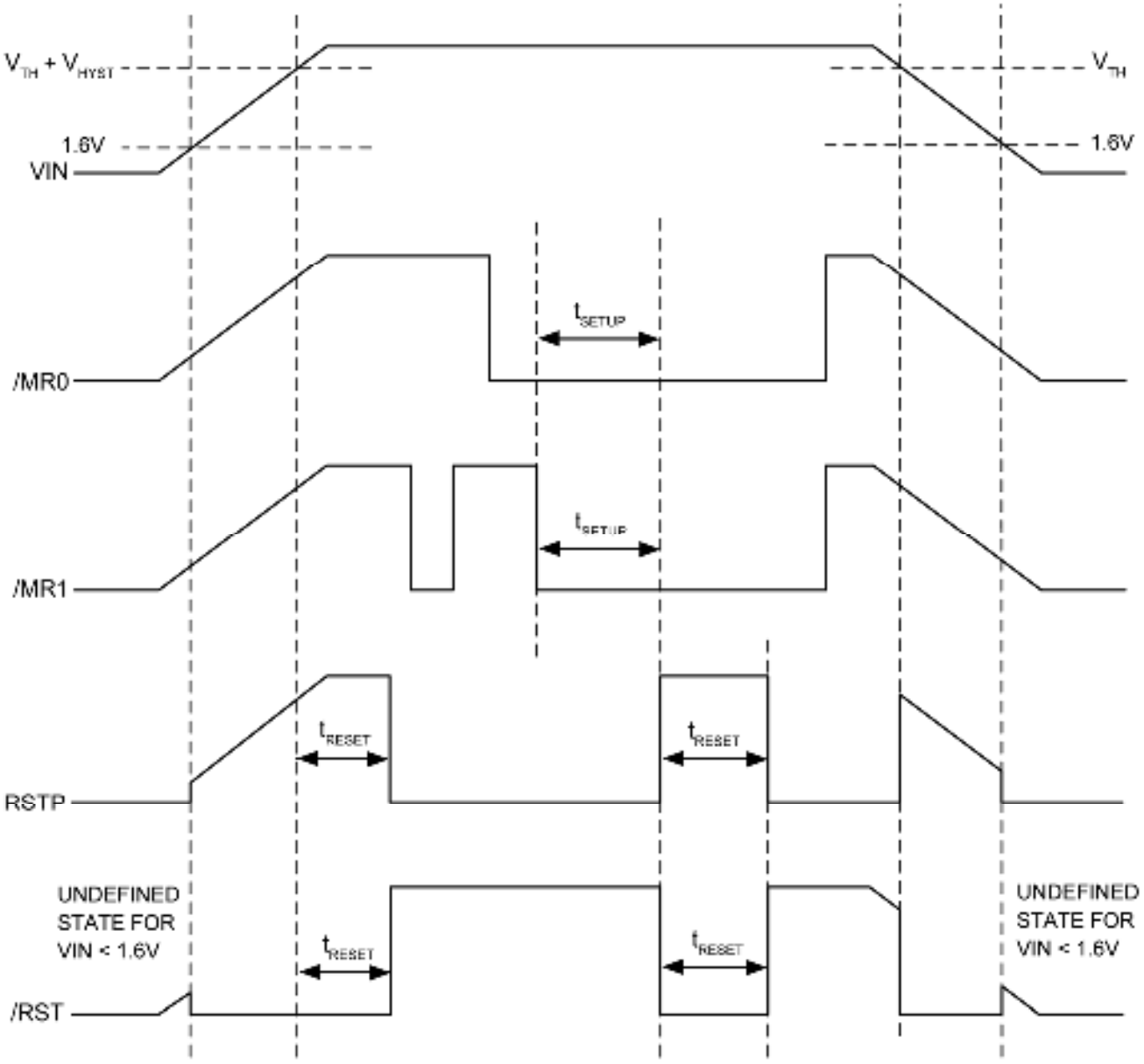

Functional Diagram

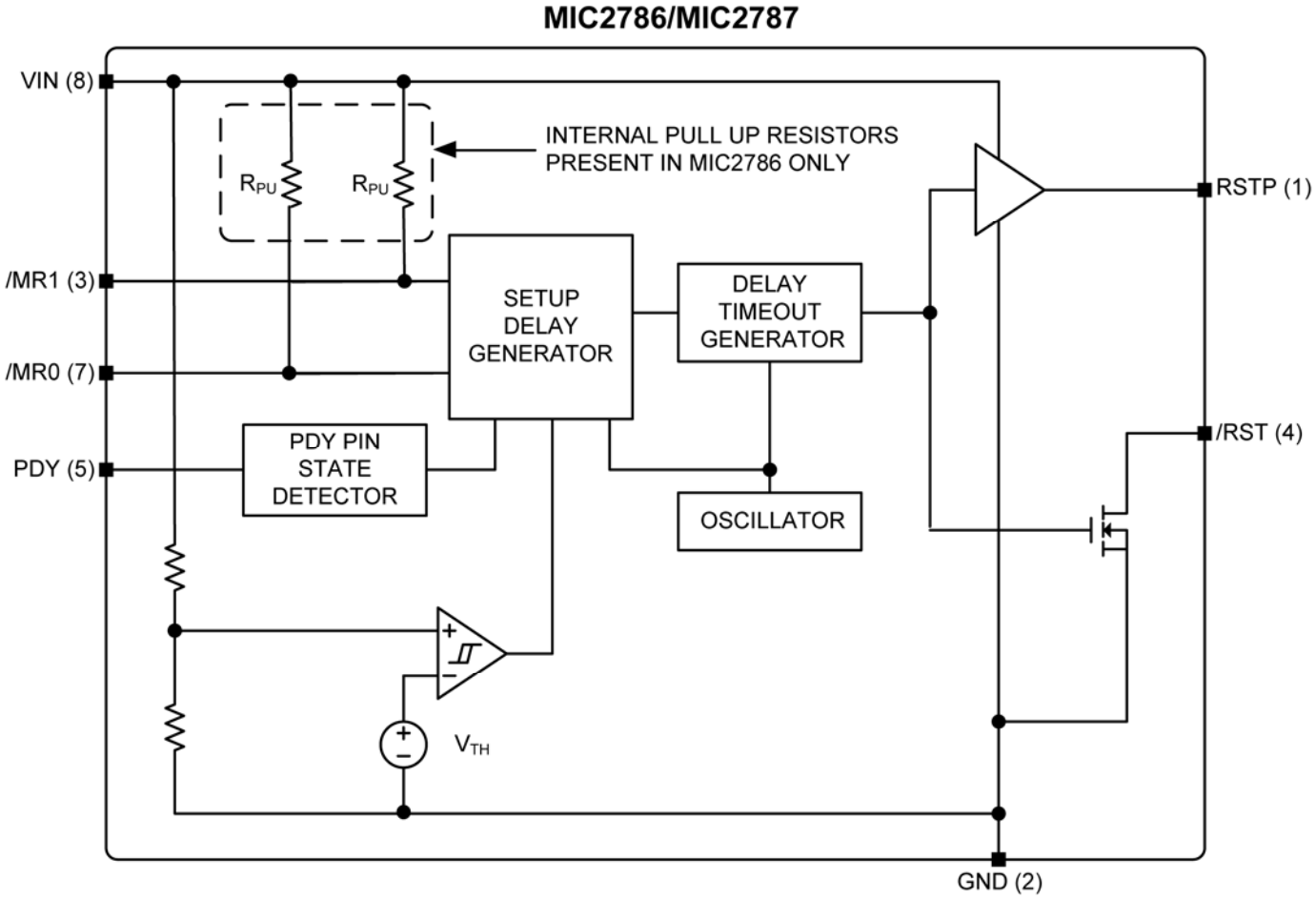

Application Information

Design and Product Advantages

The MIC2786/MIC2787 are voltage supervisor reset ICs with dual manual reset inputs and long manual reset setup delay times. The dual manual reset inputs and long manual reset setup delay times help protect against accidental system resets in applications such as smart phones, personal navigation devices, MP3 players, and set-top boxes (STB).

The MIC2786/MIC2787 assert and hold a reset when the supply voltage decreases below the factory-programmed threshold voltage. Reset is asserted for a fixed reset timeout delay once the supply voltage increases above the rising threshold voltage or when both manual reset inputs are asserted low for longer than the setup delay time.

The MIC2786/MIC2787 feature manual reset setup delay times of 2s, 4s or 6s, which are selected by the tri-state programmable delay input pin (PDY). They are available with factory-programmed reset timeout delays of 140ms (min.) or 240ms (min.). Both the MIC2786 and MIC2787 feature an active-low, open-drain reset output (/RST) and an active-high, push-pull reset output (RSTP). This allows flexibility for interfacing with different microprocessors, PMICs, and load-switches. The MIC2786 features 65kΩ pull-up resistors on the /MR0 and /MR1 inputs to provide ease when connecting to push-button inputs. The MIC2787 does not provide pull-up resistors on the manual reset inputs and is intended for directly interfacing to logic outputs.

Supply Bypass Capacitor

A 0.1µF input bypass capacitor must be placed from V_{IN} (Pin 8) to GND (Pin 2).

Programmable Delay Input (PDY)

The MIC2786/MIC2787 has a programmable setup delay time, t_{SETUP} that is set via a tri-state logic configuration. The PDY pin is intended to be connected to the V_{IN} supply voltage, ground or left floating.

PDY Configuration	t_{SETUP}
OPEN	2s
GND	4s
V_{IN}	6s

Dual Manual Reset Inputs (/MR0, /MR1)

The /MR0, /MR1 input pins have integrated pull-up resistors for the MIC2786 but require external pull-up resistors for the MIC2787. A recommended value is 100kΩ to keep the current consumption low when the push-button switches are pressed. The behavior of the reset outputs is independent of the order in which the /MR0, /MR1 inputs are driven low. If both inputs are low for a setup delay time, only one reset pulse, of width t_{RESET}, is generated. Keeping both inputs low for a longer time does not generate additional reset output pulses.

Reset Outputs (/RST and RSTP)

The /RST output is a simple open-drain N-channel MOSFET structure that requires a pull-up resistor to an external voltage. For most applications, the pull-up voltage will be the same as the power supply that supplies V_{IN} to the MIC2786/MIC2787. As shown in Figure 1, it is possible to tie this resistor to some other voltage, other than V_{IN}, thus enabling level-shifting of the /RST output. The pull-up voltage must be limited to 5.5V or less to avoid damage to the MIC2786/MIC2787. The pull-up resistor must be small enough to supply current to the inputs and leakage paths that are driven by the /RST output (a recommended value is 100kΩ). Leave floating if the /RST pin is unused.

Since the /RST output is open-drain, several reset sources can be wire-ORed, in parallel, to allow resets from multiple sources. By tying the pull-up resistor to some other voltage, the MIC2786/MIC2787 can monitor one voltage while level-shifting the /RST output to some other voltage.

The RSTP pin is a push-pull output that is driven to V_{IN}. It cannot be level-shifted to another voltage. It is an inverted signal of /RST.

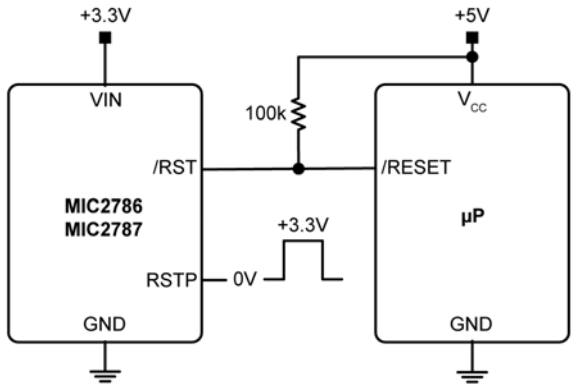

Figure 1. MIC2786/MIC2787 Used in Multiple Supply System

Asserting /RST and RSTP Outputs

a) When Functioning as a Manual Reset

The reset outputs /RST and RSTP are asserted when the setup delay time, t_{SETUP}, is exceeded while the /MR0, /MR1 pins are driven low. Both the reset outputs remain asserted for a factory-programmed reset timeout delay time t_{RESET}. Two options are available with 140ms or 240ms minimum t_{RESET} duration. The /RST pin is driven active low while the RSTP pin is driven active high for the t_{RESET} duration. The reset outputs are undefined for V_{IN} < 1.6V.

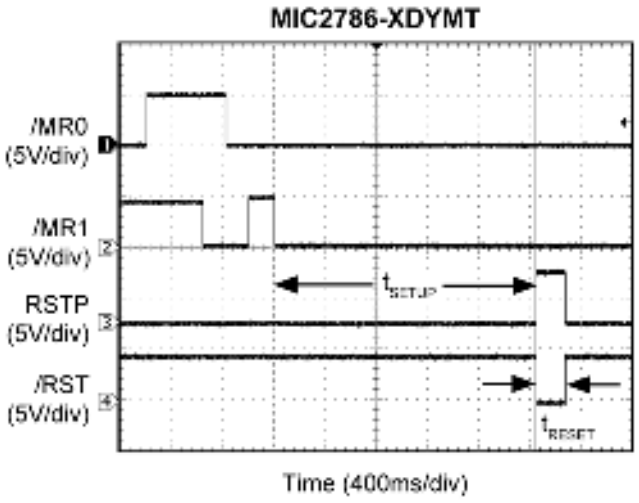

Figure 2. Manual Reset Function

b) When Functioning as a Voltage Monitor

The /RST pin is asserted whenever V_{IN} falls below the reset threshold voltage, V_{TH} (V_{IN} < V_{TH}). The V_{IN} pin circuitry includes hysteresis to prevent /RST or RSTP pin chattering due to noise. The /RST pin remains asserted for the duration of the reset timeout delay (t_{RESET}) after V_{IN} has risen above the reset threshold voltage plus the hysteresis. The reset function ensures a microprocessor is properly reset and powers up in a known condition after a power failure. /RST remains valid with V_{IN} as low as 1.6V. The RSTP output is a compliment of the /RST output.

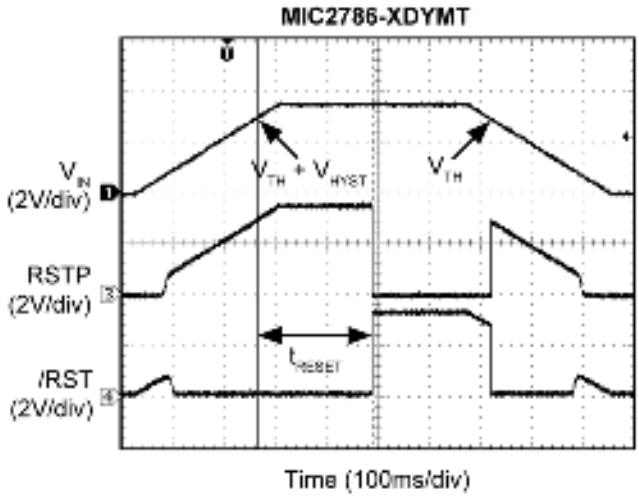

Figure 3. Voltage Monitor Function

V_{IN} Transients

The MIC2786/MIC2787 is relatively immune to small negative-going V_{IN} glitches below the reset threshold. As shown in Figure 4, the overdrive voltage is the difference between the threshold voltage and the minimum point of the V_{IN} glitch. Typically, an overdrive of 100mV, with duration of 20µs or less will not cause a reset.

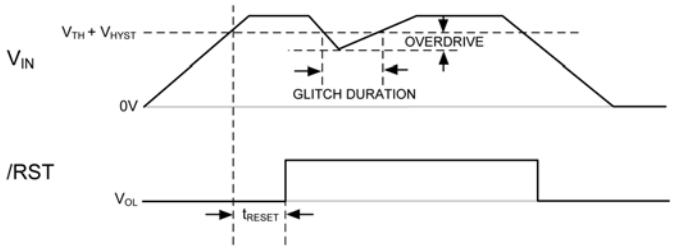

Figure 4. V_{IN} Transient

Typical Applications

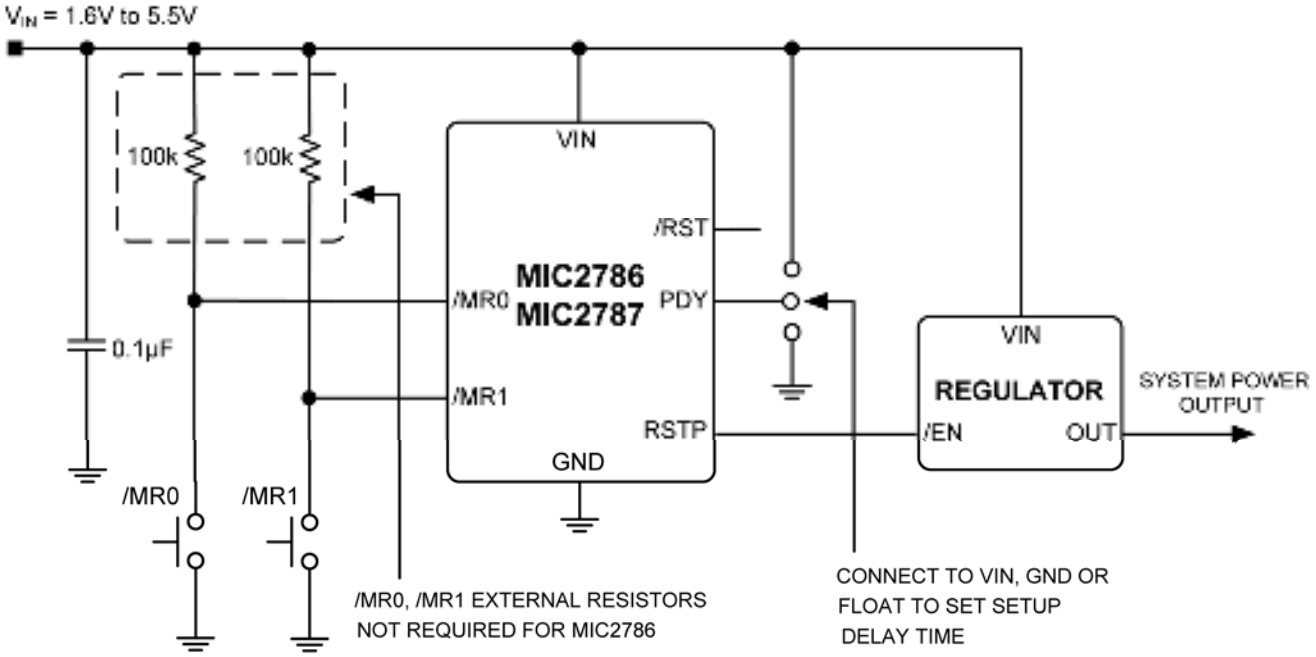

Figure 5. MIC2786/MIC2787 Used for Interrupting System Power

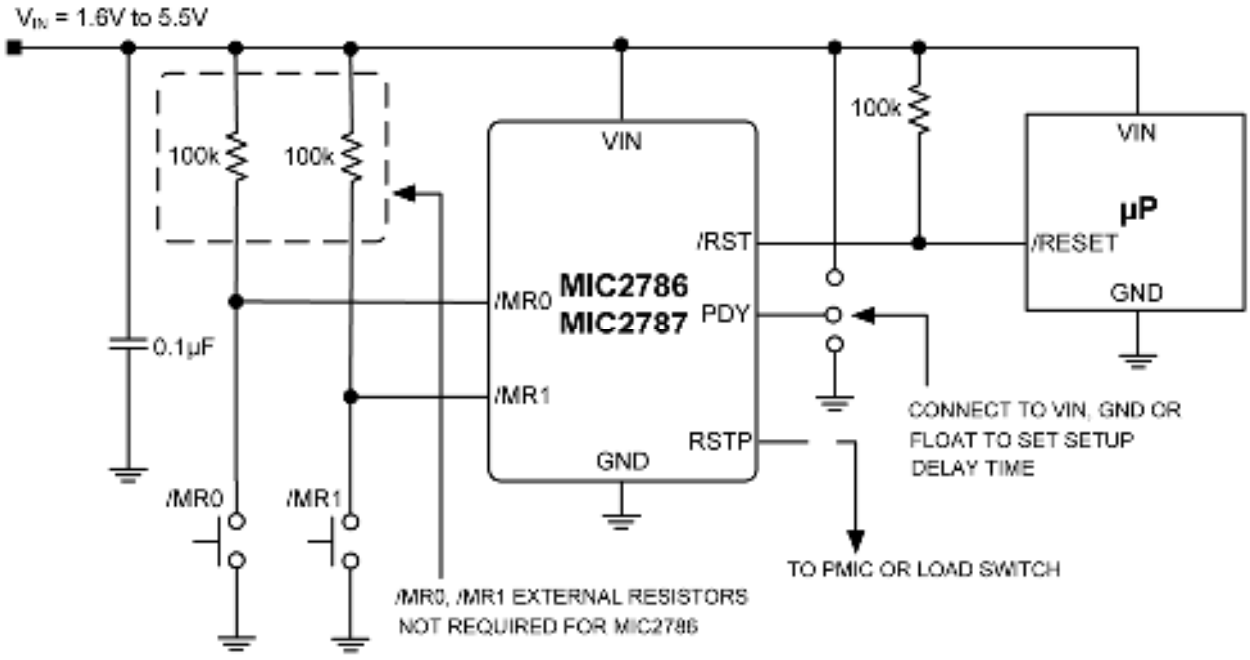

Figure 6. MIC2786/MIC2787 Used for Microcontroller Reset

Evaluation Board Schematic

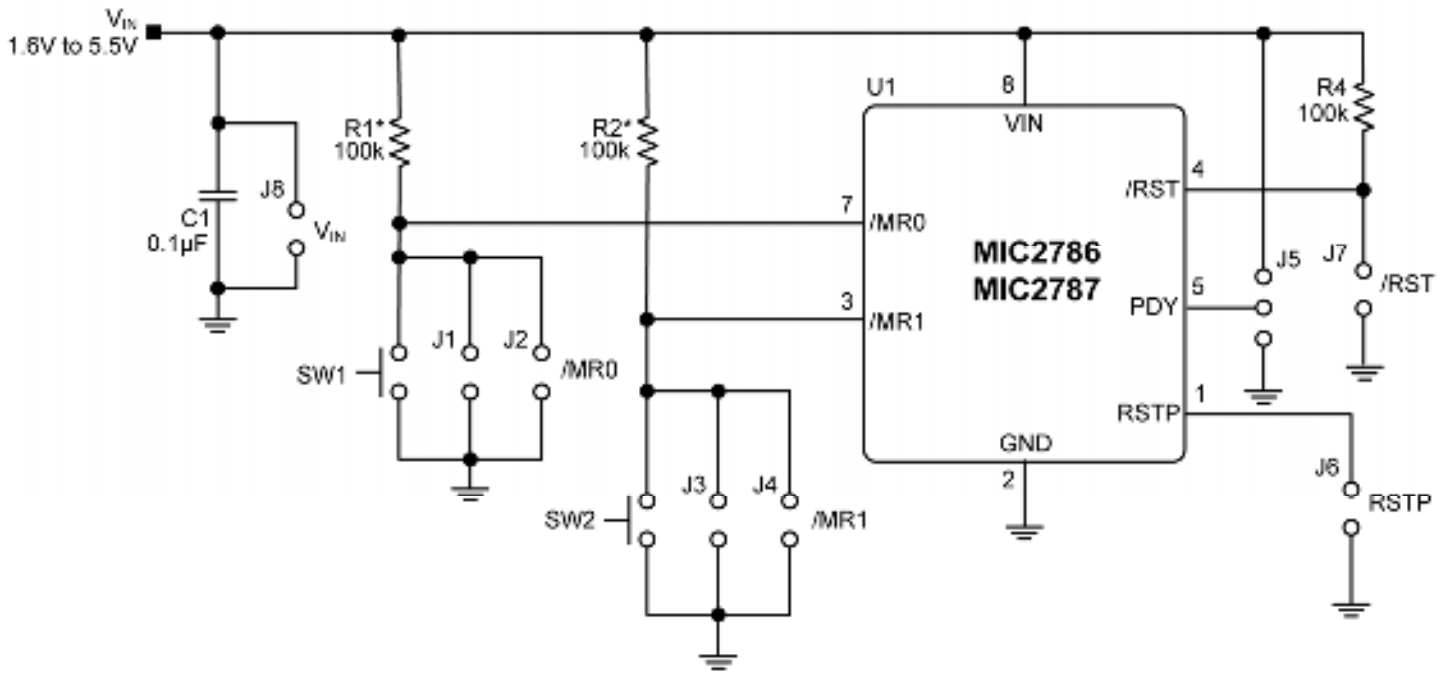

*RESISTORS R1 AND R2 ARE FOR MIC2787. R1 AND R2 ARE NOT REQUIRED FOR MIC2786.

Bill of Materials

Item	Part Number	Manufacturer	Description	Qty.
C1	GRM188R71C104KA01D	Murata[1]	0.1µF, 16V capacitor, X7R, 0603	1
R1, R2, R4	CRCW0603100KJNEA	Vishay[2]	100k, 5% resistor, 0603	3
U1	**MIC2786-XDYMT**	**Micrel, Inc.[3]**	**Push-Button Reset IC with Supply Voltage Supervisor**	**1**
	MIC2787-XDYMT			

Notes:

1. Murata Tel: www.murata.com.
2. Vishay Tel: www.vishay.com.
3. **Micrel, Inc.: www.micrel.com.**

PCB Layout Recommendations

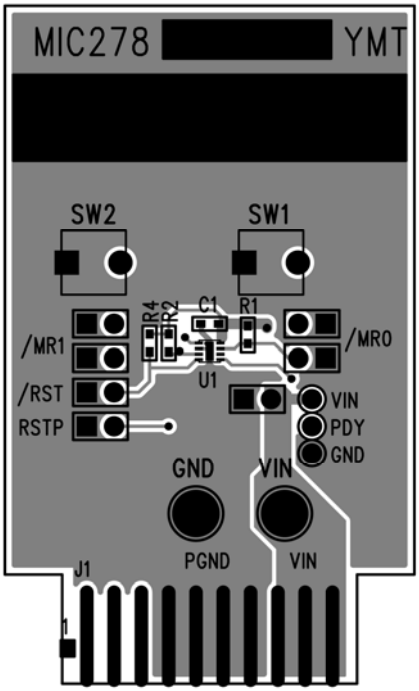

Top Layer

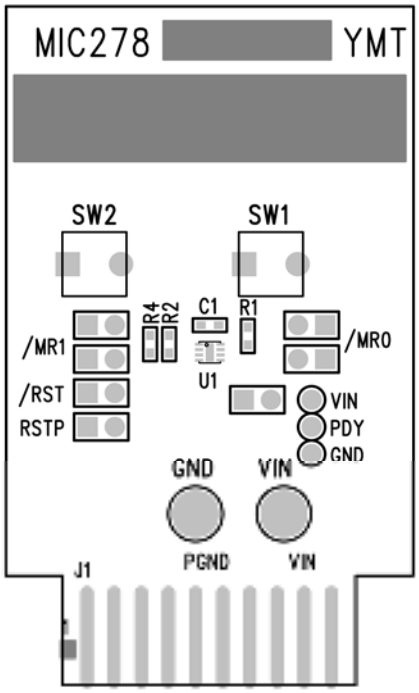

Top Silkscreen

PCB Layout Recommendations (Continued)

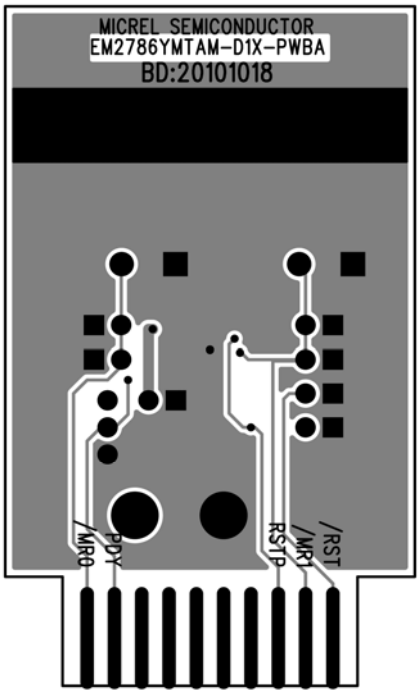

Copper Layer

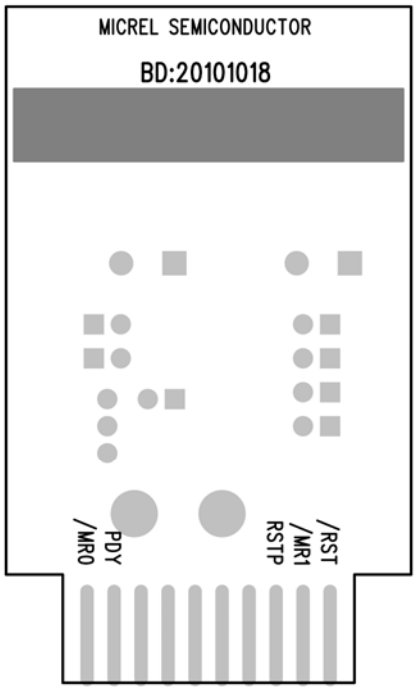

Bottom Silkscreen

Package Information

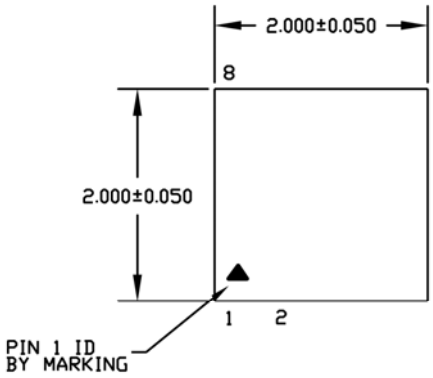

TOP VIEW

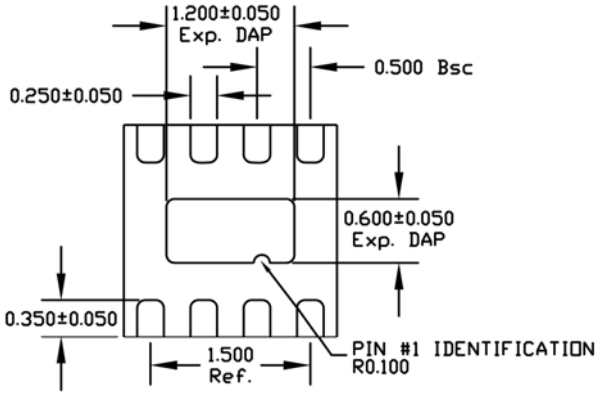

BOTTOM VIEW

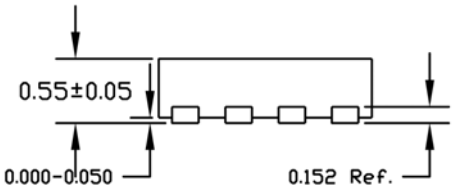

SIDE VIEW

NOTE:
1. ALL DIMENSIONS ARE IN MILLIMETERS.
2. MAX. PACKAGE WARPAGE IS 0.08 mm.
3. MAXIMUM ALLOWABE BURRS IS 0.076 mm IN ALL DIRECTIONS.
4. PIN #1 ID WILL BE LASER MARKED.

8-Pin 2mm × 2mm Thin MLF®

Recommended Landing Pattern

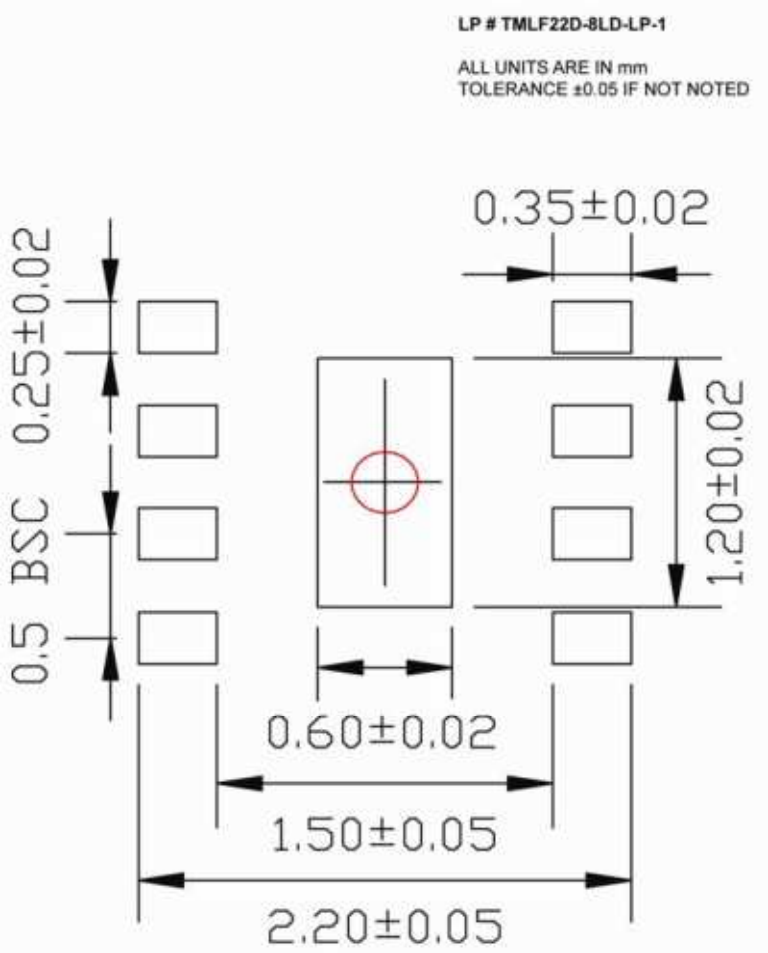

Red circle indicates Thermal Via. Size should be .300mm – .350mm in diameter and it should be connected to GND plane for maximum thermal performance.

8-Pin 2mm × 2mm Thin MLF®

MICREL, INC. 2180 FORTUNE DRIVE SAN JOSE, CA 95131 USA
TEL +1 (408) 944-0800 FAX +1 (408) 474-1000 WEB http://www.micrel.com

Micrel makes no representations or warranties with respect to the accuracy or completeness of the information furnished in this data sheet. This information is not intended as a warranty and Micrel does not assume responsibility for its use. Micrel reserves the right to change circuitry, specifications and descriptions at any time without notice. No license, whether express, implied, arising by estoppel or otherwise, to any intellectual property rights is granted by this document. Except as provided in Micrel's terms and conditions of sale for such products, Micrel assumes no liability whatsoever, and Micrel disclaims any express or implied warranty relating to the sale and/or use of Micrel products including liability or warranties relating to fitness for a particular purpose, merchantability, or infringement of any patent, copyright or other intellectual property right.

Micrel Products are not designed or authorized for use as components in life support appliances, devices or systems where malfunction of a product can reasonably be expected to result in personal injury. Life support devices or systems are devices or systems that (a) are intended for surgical implant into the body or (b) support or sustain life, and whose failure to perform can be reasonably expected to result in a significant injury to the user. A Purchaser's use or sale of Micrel Products for use in life support appliances, devices or systems is a Purchaser's own risk and Purchaser agrees to fully indemnify Micrel for any damages resulting from such use or sale.

© 2011 Micrel, Incorporated.