MIC5392/3

High-Performance Dual 150mA LDO

General Description

The MIC5392/3 is a tiny dual low-dropout linear regulator ideally suited for portable electronics. It is ideal for general purpose/digital applications which require high-power supply ripple rejection (PSRR) >60dB, eliminating the need for a bypass capacitor and providing two enable pins for maximum flexibility. The MIC5392/3 integrates two high-performance; 150mA LDOs into a tiny 6-pin, 1.2mm × 1.2mm leadless DFN package, which provides exceptional thermal package characteristics.

The MIC5392/3 is a µCap design which enables operation with very small ceramic output capacitors for stability, thereby reducing required board space and component cost. The combination of low-drop-out voltage, high power supply rejection and exceptional thermal package characteristics makes it ideal for powering mobile phones camera modules, image sensors, PDAs, MP3 players and audio codec power applications.

The MIC5392/3 is available in fixed-output voltages in the tiny 6-pin 1.2mm × 1.2mm leadless DFN package which is only 1.44mm^2 in area. Additional voltage options are available.

Datasheets and support documentation are available on Micrel's web site at: www.micrel.com.

Features

- 2.5V to 5.5V input voltage range
- Two 150mA output current LDOs
- High output accuracy
  - ±2% initial accuracy
- Low quiescent current (32µA per LDO)
- Stable with 1µF ceramic output capacitors
- Independent enable pins
- Low dropout voltage (155mV at 150mA)
- Thermal-shutdown protection
- Current-limit protection
- Internal 25Ω output discharge circuit (MIC5393)
- 1.2mm × 1.2mm Extra Thin DFN package (H ≤ 0.4mm)
- 1.2mm × 1.2mm Thin DFN package

Applications

- Smart phones
- Tablet PCs
- GPS, PMP, PDAs, and handhelds
- Audio codec power
- Portable electronics
- 5V systems

Typical Application

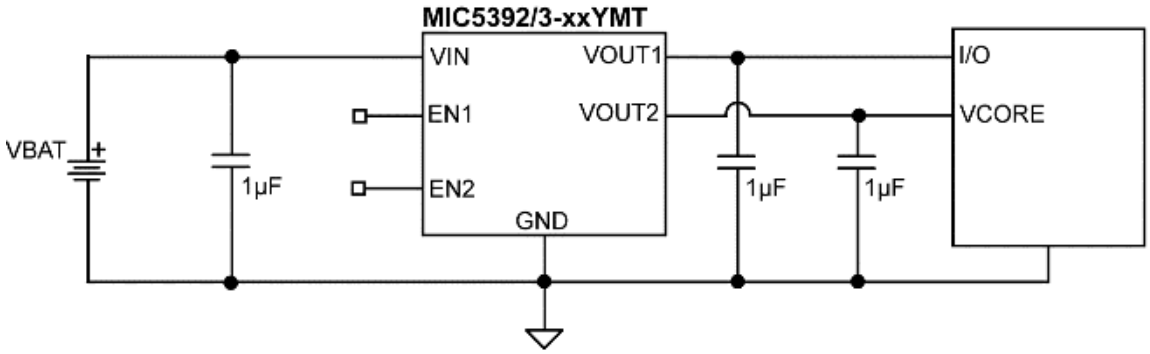

Camera DSP Power Supply Circuit

Ordering Information

Part Number[1]	Manufacturing Part Number	Marking Code	Voltage	Junction Temperature Range	Package[2]
MIC5392-1.2/1.0YMT	**MIC5392-4CYMT**	RJ	1.2/1.0V	–40°C to +125°C	6-Pin 1.2mm × 1.2mm Thin DFN
MIC5392-1.5/2.8YMX[4]	**MIC5392-FMYMX**	RX	1.5/2.8V	–40°C to +125°C	6-Pin 1.2mm × 1.2mm Extra Thin DFN
MIC5392-2.8/1.5YMT	**MIC5392-MFYMT**	RP	2.8/1.5V	–40°C to +125°C	6-Pin 1.2mm × 1.2mm Thin DFN
MIC5392-2.8/1.8YMT	**MIC5392-MGYMT**	RD	2.8/1.8V	–40°C to +125°C	6-Pin 1.2mm × 1.2mm Thin DFN
MIC5392-3.0/1.8YMX[4]	**MIC5392-PGYMX**	1R	3.0/1.8V	–40°C to +125°C	6-Pin 1.2mm × 1.2mm Extra Thin DFN
MIC5392-3.0/2.8YMT	**MIC5392-PMYMT**	RM	3.0/2.8V	–40°C to +125°C	6-Pin 1.2mm × 1.2mm Thin DFN
MIC5392-3.0/2.8YMX[4]	**MIC5392-PMYMX**	2R	3.0/2.8V	–40°C to +125°C	6-Pin 1.2mm × 1.2mm Extra Thin DFN
MIC5392-3.0/3.0YMX[4]	**MIC5392-PPYMX**	3R	3.0/3.0V	–40°C to +125°C	6-Pin 1.2mm × 1.2mm Extra Thin DFN
MIC5392-3.3/1.8YMX[4]	**MIC5392-SGYMX**	4R	3.3/1.8V	–40°C to +125°C	6-Pin 1.2mm × 1.2mm Extra Thin DFN
MIC5392-3.3/3.3YMT	**MIC5392-SSYMT**	RL	3.3/3.3V	–40°C to +125°C	6-Pin 1.2mm × 1.2mm Thin DFN
MIC5392-3.3/3.3YMX[4]	**MIC5392-SSYMX**	5R	3.3/3.3V	–40°C to +125°C	6-Pin 1.2mm × 1.2mm Extra Thin DFN
MIC5393-1.5/2.8YMX[3]	**MIC5393-FMYMX**	U6	1.5/2.8V	–40°C to +125°C	6-Pin 1.2mm × 1.2mm Extra Thin DFN
MIC5393-2.8/2.8YMX[3]	**MIC5393-MMYMX**	UV	2.8/2.8	–40°C to +125°C	6-Pin 1.2mm × 1.2mm Extra Thin DFN
MIC5393-3.0/1.8YMX[3]	**MIC5393-PGYMX**	U5	3.0/1.8V	–40°C to +125°C	6-Pin 1.2mm × 1.2mm Extra Thin DFN
MIC5393-3.0/2.8YMX[3][4]	**MIC5393-PMYMX**	UU	3.0/2.8V	–40°C to +125°C	6-Pin 1.2mm × 1.2mm Extra Thin DFN
MIC5393-3.0/3.0YMT[3]	**MIC5393-PPYMT**	UL	3.0/3.0V	–40°C to +125°C	6-Pin 1.2mm × 1.2mm Thin DFN
MIC5393-3.0/3.0YMX[3]	**MIC5393-PPYMX**	U3	3.0/3.0V	–40°C to +125°C	6-Pin 1.2mm × 1.2mm Extra Thin DFN
MIC5393-3.3/1.8YMT[3]	**MIC5393-SGYMT**	UB	3.3/1.8V	–40°C to +125°C	6-Pin 1.2mm × 1.2mm Thin DFN
MIC5393-3.3/1.8YMX[3]	**MIC5393-SGYMX**	U2	3.3/1.8V	–40°C to +125°C	6-Pin 1.2mm × 1.2mm Extra Thin DFN
MIC5393-3.3/3.3YMT[3]	**MIC5393-SSYMT**	UR	3.3/3.3V	–40°C to +125°C	6-Pin 1.2mm × 1.2mm Thin DFN
MIC5393-3.3/3.3YMX[3]	**MIC5393-SSYMX**	U4	3.3/3.3V	–40°C to +125°C	6-Pin 1.2mm × 1.2mm Extra Thin DFN
MIC5393-1.5/2.8YMT	**MIC5393-FMYMT**	UP	1.5/2.8V	–40°C to +125°C	6-Pin 1.2mm × 1.2mm Thin DFN
MIC5393-1.8/2.8YMT	**MIC5393-GMYMT**	UT	1.8/2.8V	–40°C to +125°C	6-Pin 1.2mm × 1.2mm Thin DFN
MIC5393-1.8/2.8YMX	**MIC5393-GMYMX**	U7	1.8/2.8V	–40°C to +125°C	6-Pin 1.2mm × 1.2mm Extra Thin DFN

Notes:

1. Other voltages available. Contact Micrel for details.
2. Thin DFN and Extra Thin DFN are GREEN, RoHS-compliant package. Lead finish is NiPdAu. Mold compound is Halogen Free.
3. MIC5393 offers Auto-Discharge function.
4. Contact factory for availability.

Pin Configuration

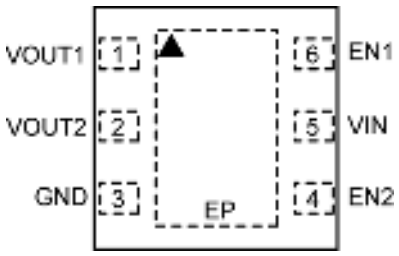

6-Pin 1.2mm × 1.2mm Thin DFN (MT)
6-Pin 1.2mm × 1.2mm Extra Thin DFN (MX)
(Top View)

Pin Description

Pin Number	Pin Name	Pin Function
1	VOUT1	Output regulator 1. Connect a capacitor to ground.
2	VOUT2	Output regulator 2. Connect a capacitor to ground.
3	GND	Ground.
4	EN2	Enable input for regulator 2. Logic High enables operation of regulator 2. Logic Low will shut down regulator 2. Do not leave floating.
5	VIN	Input voltage supply. Connect a capacitor to ground.
6	EN1	Enable input for regulator 1. Logic High enables operation of regulator 1. Logic Low will shut down regulator 1. Do not leave floating.
EP	ePad	Exposed heat sink pad. Connect to ground.

Absolute Maximum Ratings[5]

Supply Voltage (V_{IN}) ..... –0.3V to +6V
Enable Voltage (V_{EN1}, V_{EN2}). ..... –0.3V to VIN
Power Dissipation (P_D) ..... Internally Limited[7]
Lead Temperature (soldering, 10sec.) ..... 260°C
Junction Temperature (T_J) ..... –40°C to +125°C
Storage Temperature (T_S) ..... –65°C to +150°C
ESD Rating[8] 2kV

Operating Ratings[6]

Supply Voltage (V_{IN}) ..... +2.5V to +5.5V
Enable Voltage (V_{EN1}, V_{EN2}) ..... –0.3V to V_{IN}
Junction Temperature (T_J) ..... –40°C to +85°C
Junction Thermal Resistance
1.2mm×1.2mm Thin DFN-6 (θ_{JA}) ..... 173°C/W
1.2mm×1.2mm Extra Thin DFN-6 (θ_{JA}) ..... 173°C/W

Electrical Characteristics[9]

$V_{IN} = V_{EN1} = V_{EN2} = V_{OUT} + 1V$; higher of the two regulator outputs; $I_{OUTLDO1} = I_{OUTLDO2} = 100\mu A$; $C_{OUT1} = C_{OUT2} = 1\mu F$; $T_J = 25°C$, **Bold** values indicate –40°C to +125°C, unless noted.

Parameter	Condition	Min.	Typ.	Max.	Units
Output Voltage Accuracy	Variation from nominal V_{OUT}	–2.0		+2.0	%
	Variation from nominal V_{OUT}; –40°C to +125°C	**–3.0**		**+3.0**	
Line Regulation	$V_{IN} = V_{OUT}$ +1V to 5.5V		0.02	**0.3**	%/V
Load Regulation	I_{OUT} = 100µA to 150mA		0.3	1	%
Dropout Voltage	I_{OUT} = 50mA I_{OUT} = 150mA		50 155	**110** **310**	mV
Ground Pin Current	V_{EN1} = High; V_{EN2} = Low; I_{OUT} = 0mA V_{EN1} = Low; V_{EN2} = High; I_{OUT} = 0mA $V_{EN1} = V_{EN2}$ = High; $I_{OUT1} = I_{OUT2}$ = 0mA		32 32 57	**45** **45** **85**	µA
Ground Pin Current in Shutdown	$V_{EN1} = V_{EN2}$ = 0V		0.05	1	µA
Ripple Rejection	f = 1kHz; C_{OUT} = 1µF		60		dB
Current Limit	V_{OUT} = 0V	200	325	550	mA
Output Voltage Noise	C_{OUT} = 1µF, 10Hz to 100kHz		100		μV_{RMS}
Auto-Discharge NFET Resistance	MIC5393 Only; $V_{EN1} = V_{EN2}$ = 0V; V_{IN} = 3.6V		25		Ω
Enable Inputs (EN1/EN2)					
Enable Input Voltage	Logic Low			**0.2**	V
	Logic High	**1.2**			
Enable Input Current	$V_{IL} \le 0.2V$		0.01	**1**	µA
	$V_{IH} \ge 1.2V$		0.01	**1**	
Turn-On Time	C_{OUT} = 1µF		50	**125**	µs

Notes:

5. Exceeding the absolute maximum rating may damage the device.
6. The device is not guaranteed to function outside its operating rating.
7. The maximum allowable power dissipation of any T_A (ambient temperature) is $P_{D(max)} = (T_J(max) - T_A) / \theta_{JA}$. Exceeding the maximum allowable power dissipation will result in excessive die temperature, and the regulator will go into thermal shutdown.
8. Devices are ESD sensitive. Handling precautions recommended. Human body model, 1.5kΩ in series with 100pF.
9. Specification for packaged product only.

Typical Characteristics

Power Supply Rejection Ratio

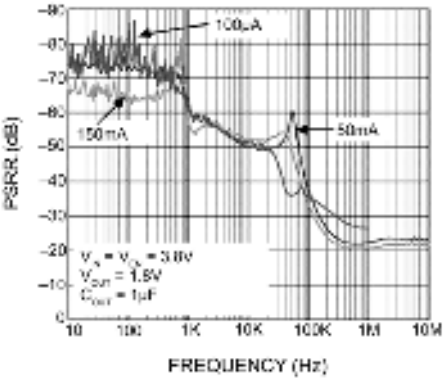

Output Voltage vs. Input Voltage

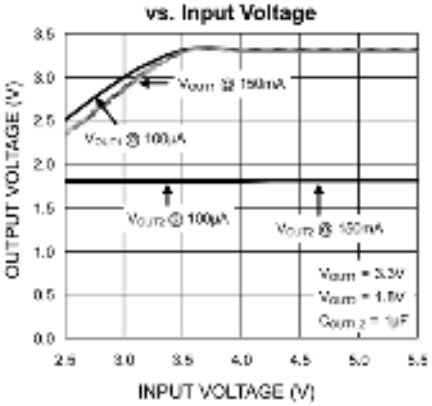

Output Voltage vs. Output Current

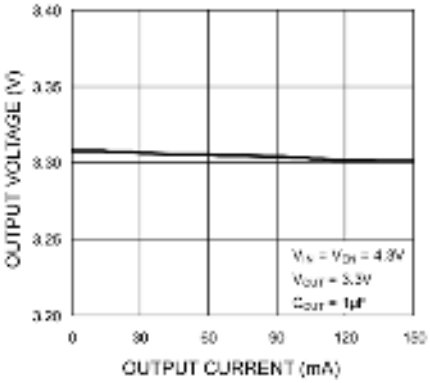

Ground Current vs. Input Voltage

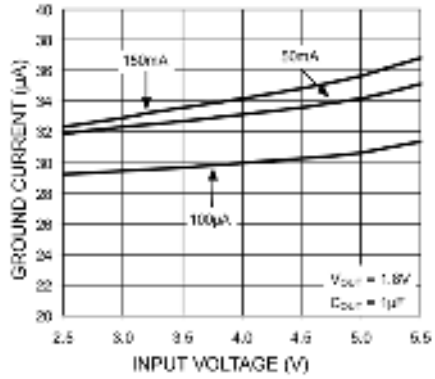

Ground Current vs. Output Current

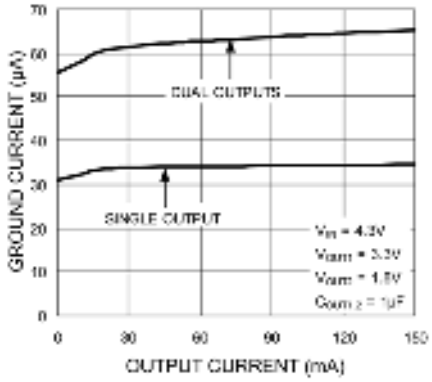

Ground Current vs. Temperature

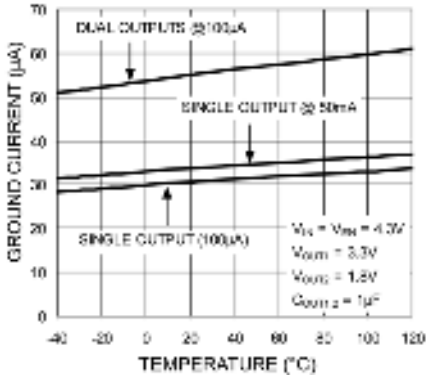

Dropout Voltage vs. Output Current

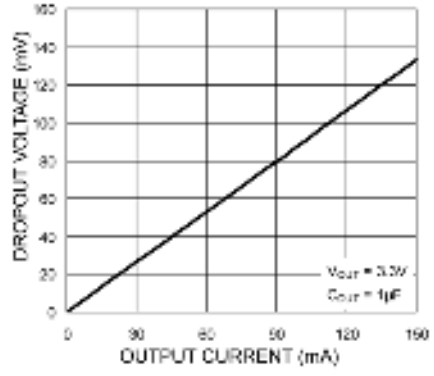

Dropout Voltage vs. Temperature

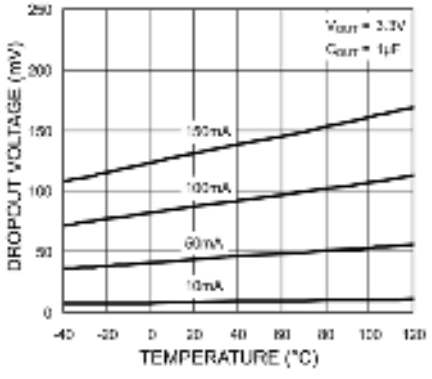

Current Limit vs. Input Voltage

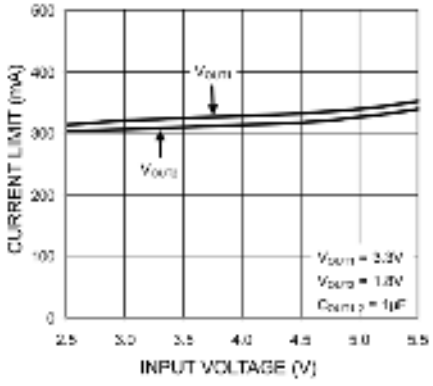

Typical Characteristics (Continued)

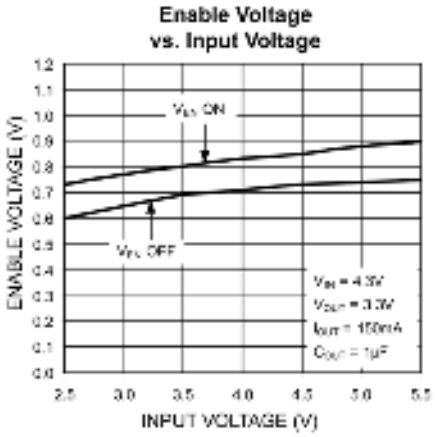

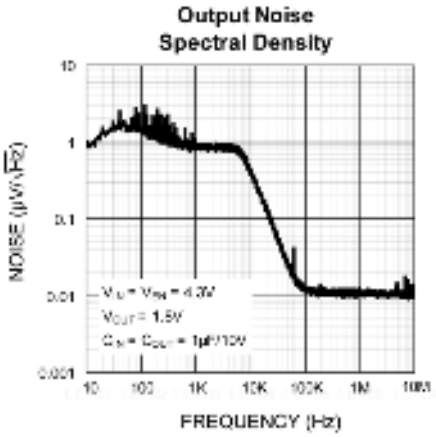

Functional Characteristics

Turn-On Time

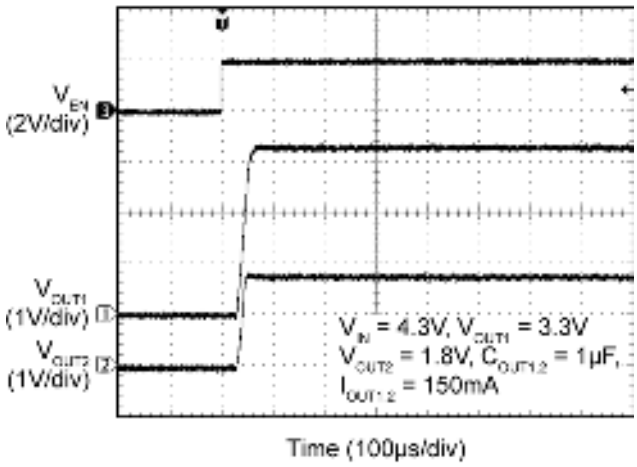

MIC5393 Turn-Off Time (Auto-Discharge)

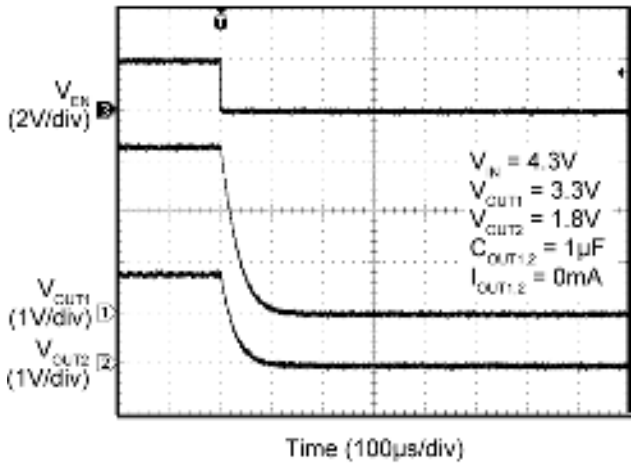

Load Transient
(5mA to 150mA)

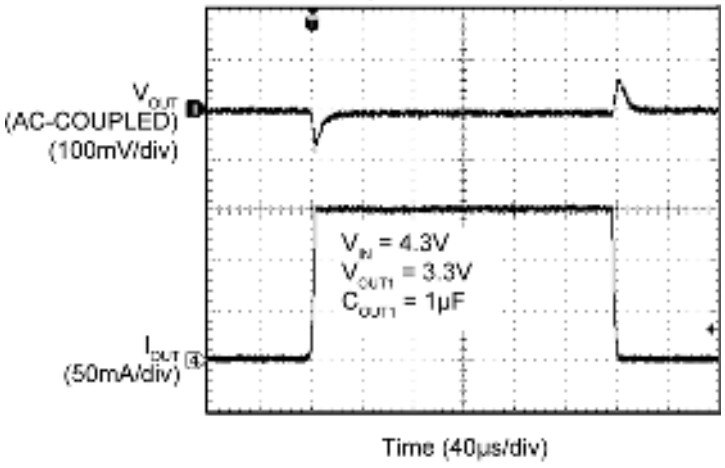

Load Transient
(5mA to 150mA)

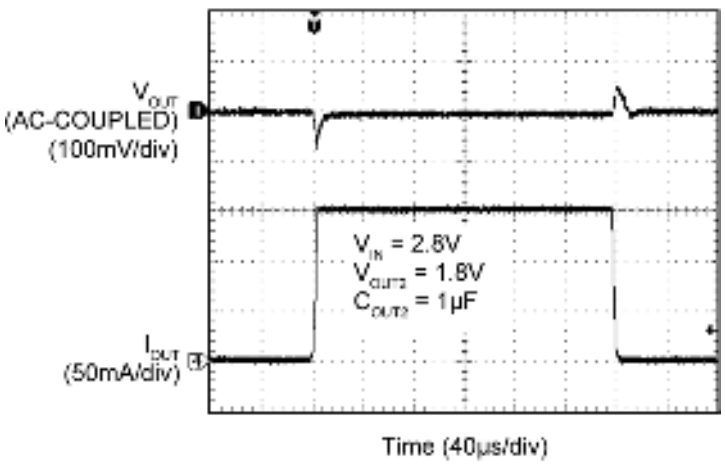

Line Transient
(4.3V to 5.5V @ 150mA)

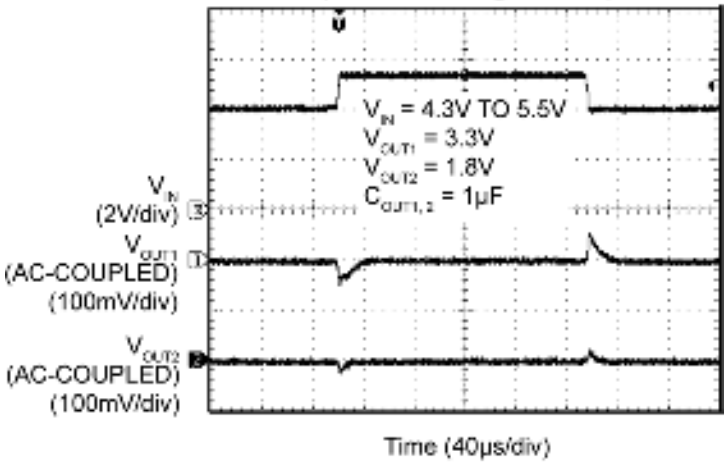

Functional Diagram

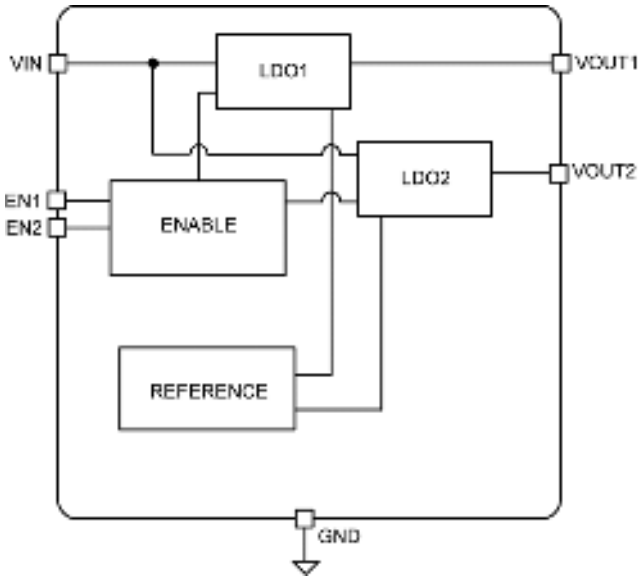

Figure 1. Simplified MIC5392 Functional Block Diagram

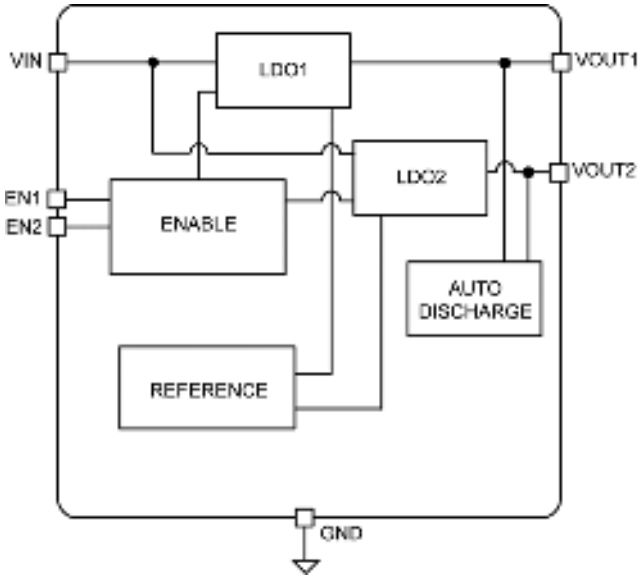

Figure 2. Simplified MIC5393 Functional Block Diagram

Application Information

MIC5392/3 is a dual 150mA LDO in a small 1.2mm × 1.2mm package. The MIC5393 includes an auto-discharge circuit for each of the LDO outputs that are activated when the output is disabled. The MIC5392/3 regulator is fully protected from damage due to fault conditions through linear current limiting and thermal shutdown.

Input Capacitor

The MIC5392/3 is a high-performance, high-bandwidth device. An input capacitor of 1µF capacitor is required from the input to ground to provide stability. Low-ESR ceramic capacitors provide optimal performance at a minimum of space. Additional high-frequency capacitors, such as small-valued NPO dielectric-type capacitors, help filter out high-frequency noise and are good practice in any RF-based circuit. X5R or X7R dielectrics are recommended for the input capacitor. Y5V dielectrics lose most of their capacitance over temperature and are therefore, not recommended.

Output Capacitor

The MIC5392/3 requires an output capacitor of 1µF or greater to maintain stability. The design is optimized for use with low-ESR ceramic chip capacitors. High-ESR capacitors may cause high frequency oscillation. The output capacitor can be increased, but performance has been optimized for a 1µF ceramic output capacitor and does not improve significantly with larger capacitance.

X7R/X5R dielectric-type ceramic capacitors are recommended because of their temperature performance. X7R-type capacitors change capacitance by 15% over their operating temperature range and are the most stable type of ceramic capacitors. Z5U and Y5V dielectric capacitors change value by as much as 50% and 60%, respectively, over their operating temperature ranges. To use a ceramic chip capacitor with Y5V dielectric, the value must be much higher than an X7R ceramic capacitor to ensure the same minimum capacitance over the equivalent operating temperature range.

No-Load Stability

Unlike many other voltage regulators, the MIC5392/3 will remain stable and in regulation with no load. This is especially important in CMOS RAM to keep applications alive.

Enable/Shutdown

The MIC5392/3 comes with two active-high enable pins that allow each regulator to be disabled independently. Forcing the enable pin low disables the regulator and sends it into a “zero” off-mode-current state. In this state, current consumed by the regulator goes nearly to zero. When disabled the MIC5393 switches a 25Ω (typical) load on the regulator output to discharge the external capacitor.

Forcing the enable pin high enables the output voltage. The active-high enable pin uses CMOS technology and the enable pin cannot be left floating; a floating enable pin may cause an indeterminate state on the output.

Thermal Considerations

The MIC5392/3 is designed to provide 150mA of continuous current for both outputs in a very small package. Maximum ambient operating temperature can be calculated based on the output current and the voltage drop across the part. For example if the input voltage is 3.6V, the output voltage is 3.0V for VOUT1, 2.8V for VOUT2 and the output current = 150mA. The actual power dissipation of the regulator circuit can be determined using Equation 1:

Eq. 1

$$P_D = (V_{IN} - V_{OUT1})\ I_{OUT1} + (V_{IN} - V_{OUT2})\ I_{OUT2} + V_{IN}\ I_{GND}$$

Because this device is CMOS and the ground current is typically <100µA over the load range, the power dissipation contributed by the ground current is <1% and can be ignored for the calculation in Equation 2:

Eq. 2

$$P_D = (3.6V - 3.0V) \times 150mA + (3.6V - 2.8) \times 150mA$$

$$P_D = 0.21W$$

To determine the maximum ambient operating temperature of the package, use the junction-to-ambient thermal resistance of the device and the following basic formula in Equation 3:

Eq. 3

$$P_{D(MAX)} = \left(\frac{T_{J(MAX)} - T_A}{\theta_{JA}} \right)$$

$T_{J(MAX)}$ = 125°C, and the maximum junction temperature of the die, θ_{JA}, thermal resistance = 173°C/W.

Substituting PD for PD(max) and solving for the ambient operating temperature will give the maximum operating conditions for the regulator circuit. The junction-to-ambient thermal resistance for the minimum footprint is 173°C/W.

The maximum power dissipation must not be exceeded for proper operation.

For example, when operating the MIC5392-PMYMT at an input voltage of 3.6V and 150mA loads at each output with a minimum footprint layout, the maximum ambient operating temperature TA can be determined in Equation 4:

Eq. 4

$$0.21W = (125°C – TA)/(173°C/W)$$

$$TA = 89°C$$

Therefore, a 2.8V/1.8V application with 150mA at each output current can accept an ambient operating temperature of 58°C in a 1.2mm × 1.2mm DFN package. For a full discussion of heat sinking and thermal effects on voltage regulators, refer to the “Regulator Thermals” section of Micrel’s *Designing with Low-Dropout Voltage Regulators* handbook. This information can be found on Micrel's website at:

http://www.micrel.com/_PDF/other/LDOBk_ds.pdf

Typical Application Circuit

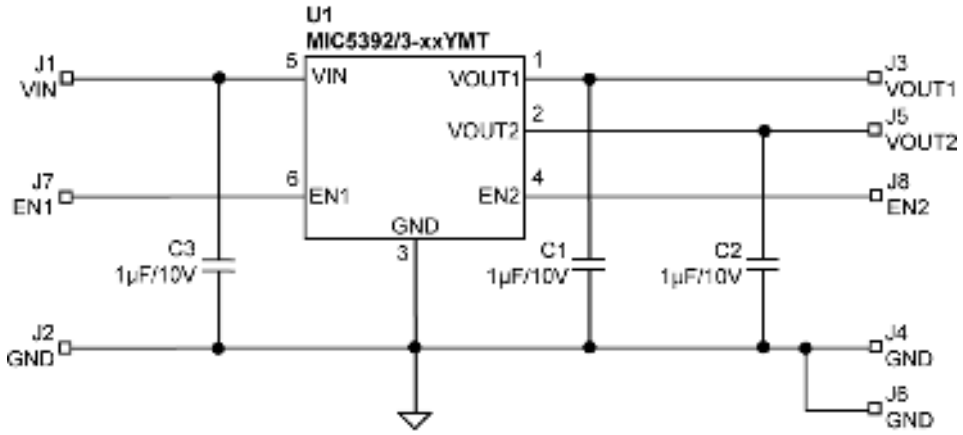

Bill of Materials

Item	Part Number	Manufacturer	Description	Qty.
C1, C2, C3	GRM188R61A105KE19D	Murata[10]	Capacitor, 1µF, 10V, X5R, 0603	3
U1	**MIC5392/3-xxYMT** **MIC5392/3-xxYMX**	**Micrel, Inc.**[9]	**High-Performance Dual 150mA LDO**	**1**

Notes:

10. Murata: www.murata.com.
11. **Micrel, Inc.:** www.micrel.com.

PCB Layout Recommendations

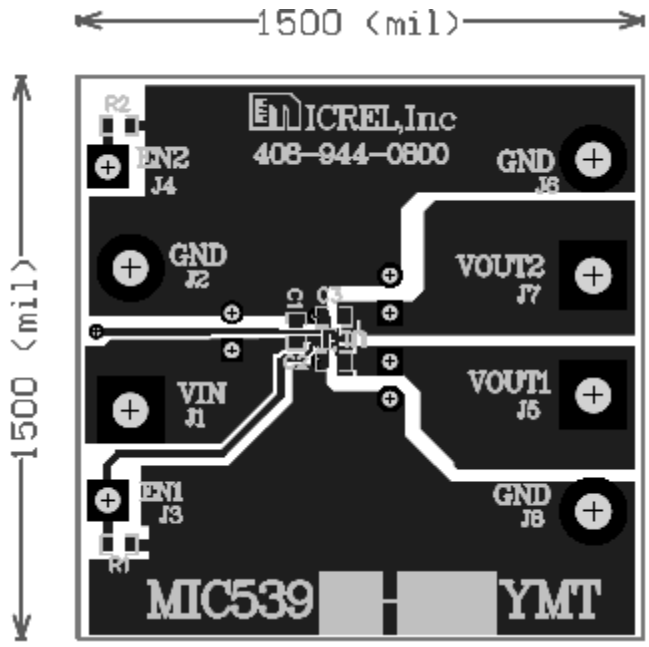

Top Layer

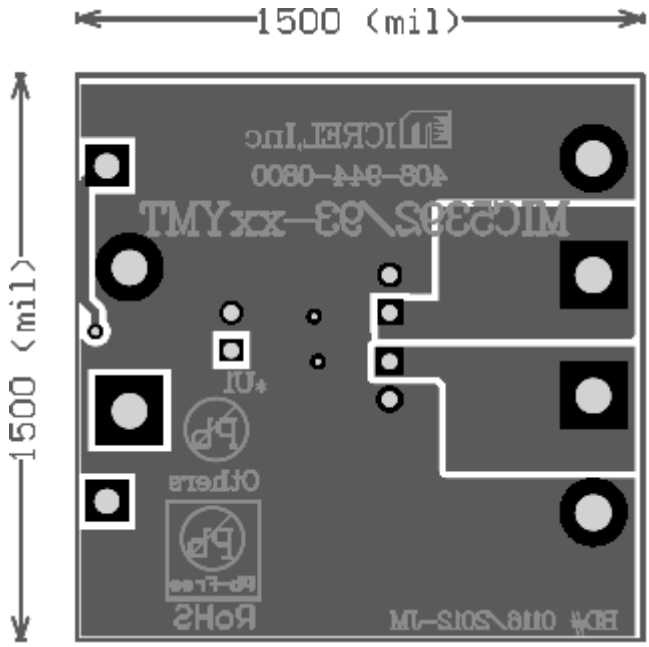

Bottom Layer

Package Information and Recommended Landing Pattern[12]

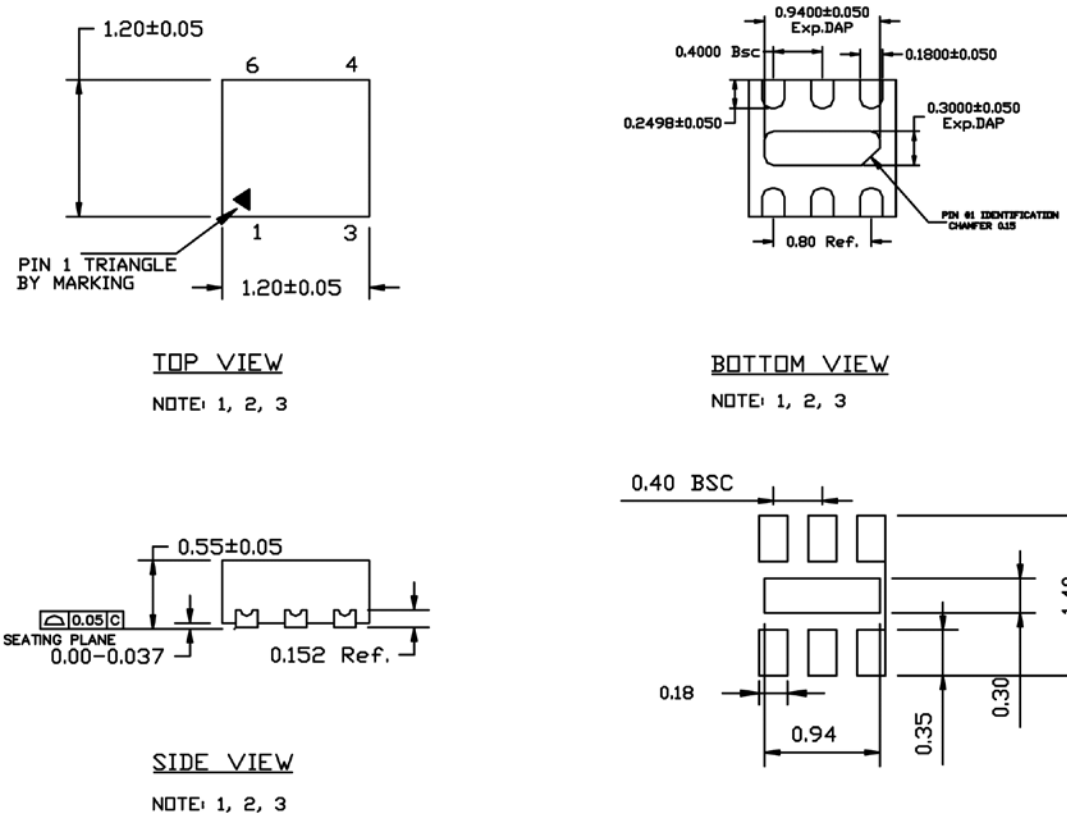

6-Pin 1mm × 1mm Thin DFN (MT)

Note:

12. Package information is correct as of the publication date. For updates and most current information, go to www.micrel.com.

Package Information and Recommended Landing Pattern[12] (Continued)

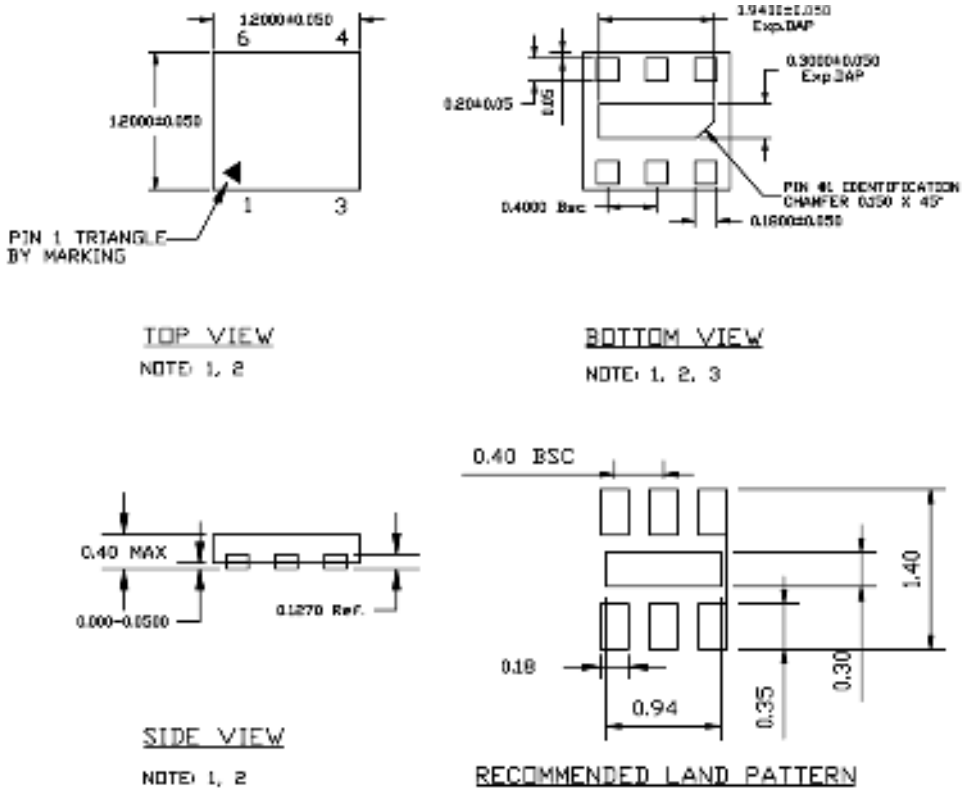

NOTE:
1. MAX PACKAGE WARPAGE IS 0.05 MM
2. MAX ALLOWABLE BURR IS 0.076MM IN ALL DIRECTIONS
3. LEAD AND EPAD CORNER MAXIMUM RADIUS 0.075MM

6-Pin 1.2mm × 1.2mm Extra Thin DFN (MX)

MICREL, INC. 2180 FORTUNE DRIVE SAN JOSE, CA 95131 USA
TEL +1 (408) 944-0800 FAX +1 (408) 474-1000 WEB http://www.micrel.com

Micrel, Inc. is a leading global manufacturer of IC solutions for the worldwide high performance linear and power, LAN, and timing & communications markets. The Company's products include advanced mixed-signal, analog & power semiconductors; high-performance communication, clock management, MEMs-based clock oscillators & crystal-less clock generators, Ethernet switches, and physical layer transceiver ICs. Company customers include leading manufacturers of enterprise, consumer, industrial, mobile, telecommunications, automotive, and computer products. Corporation headquarters and state-of-the-art wafer fabrication facilities are located in San Jose, CA, with regional sales and support offices and advanced technology design centers situated throughout the Americas, Europe, and Asia. Additionally, the Company maintains an extensive network of distributors and reps worldwide.

Micrel makes no representations or warranties with respect to the accuracy or completeness of the information furnished in this datasheet. This information is not intended as a warranty and Micrel does not assume responsibility for its use. Micrel reserves the right to change circuitry, specifications and descriptions at any time without notice. No license, whether express, implied, arising by estoppel or otherwise, to any intellectual property rights is granted by this document. Except as provided in Micrel's terms and conditions of sale for such products, Micrel assumes no liability whatsoever, and Micrel disclaims any express or implied warranty relating to the sale and/or use of Micrel products including liability or warranties relating to fitness for a particular purpose, merchantability, or infringement of any patent, copyright, or other intellectual property right.

Micrel Products are not designed or authorized for use as components in life support appliances, devices or systems where malfunction of a product can reasonably be expected to result in personal injury. Life support devices or systems are devices or systems that (a) are intended for surgical implant into the body or (b) support or sustain life, and whose failure to perform can be reasonably expected to result in a significant injury to the user. A Purchaser's use or sale of Micrel Products for use in life support appliances, devices or systems is a Purchaser's own risk and Purchaser agrees to fully indemnify Micrel for any damages resulting from such use or sale.

© 2012 Micrel, Incorporated.