AC Controller Modules

I_{RMS} = 230A
V_{RRM} = 800 - 1800 V

ECO-PAC 2

Preliminary Data

V_{RSM} V_{DSM} V	V_{RRM} V_{DRM} V	Type	
900	800	MMO230 -08io7	MLO230 -08io7
1300	1200	MMO230 -12io7	MLO230 -12io7
1500	1400	MMO230 -14io7	MLO230 -14io7
1700	1600	MMO230 -16io7	MLO230 -16io7
1900	1800	MMO230 -18io7	MLO230 -18io7

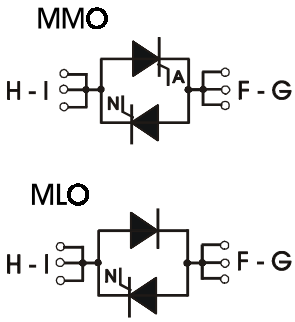

Symbol	Conditions		Maximum Ratings	
I_{RMS}	T_C = 85°C; 50-400 Hz (per single controller)		230	A
I_{TRMS}			180	A
I_{TAVM}	T_C = 85°C; 180° sine		105	A
I_{TSM}	T_{VJ} = 45°C; V_R = 0 V;	t = 10 ms (50 Hz), sine	2250	A
		t = 8.3 ms (60 Hz), sine	2400	A
	T_{VJ} = 125°C; V_R = 0 V;	t = 10 ms (50 Hz), sine	2000	A
		t = 8.3 ms (60 Hz), sine	2150	A
I^2dt	T_{VJ} = 45°C; V_R = 0 V;	t = 10 ms (50 Hz), sine	25300	A^2s
		t = 8.3 ms (60 Hz), sine	23900	A^2s
	T_{VJ} = 125°C; V_R = 0 V;	t = 10 ms (50 Hz), sine	20000	A^2s
		t = 8.3 ms (60 Hz), sine	19100	A^2s
$(di/dt)_{cr}$	T_{VJ} = 125°C; f = 50 Hz; t_P = 200 µs; $V_D = {}^2/_3 V_{DRM}$;	repetitive, I_T = 250 A	150	A/µs
	I_G = 0.45 A di_G/dt = 0.45 A/µs;	non repetitive, $I_T = I_{TAVM}$	500	A/µs
$(dv/dt)_{cr}$	T_{VJ} = 125°C; $V_{DR} = {}^2/_3 V_{DRM}$ R_{GK} = ∞, method 1 (linear voltage rise)		1000	V/µs
P_{GM}	T_{VJ} = 125°C; $I_T = I_{TAVM}$;	t_P = 30 ms	≤ 10	W
		t_P = 300 ms	≤ 5	W
P_{GAVM}			0.5	W
V_{RGM}			10	V
T_{VJ}			-40 ... + 125	°C
T_{VJM}			125	°C
T_{stg}			-40 ... + 125	°C
V_{ISOL}	50/60 Hz, RMS	t = 1 min	3000	V ~
	I_{ISOL} ≤ 1 mA	t = 1 s	3600	V ~
M_d	Mounting torque	(M4)	1.5 - 2.0	Nm
			14 - 18	lb.in.
Weight	typ.		26	g

Data according to IEC 60747 refer to a single thyristor unless otherwise stated
IXYS reserves the right to change limits, test conditions and dimensions.

Features

- Thyristor controller for AC (circuit W1C acc. to IEC) for mains frequency
- Isolation voltage 3000 V~
- Planar glass passivated chips
- Low forward voltage drop
- Leads suitable for PC board soldering

Applications

- Switching and control of single and three phase AC circuits
- Light and temperature control
- Softstart AC motor controller
- Solid state switches

Advantages

- Easy to mount with two screws
- Space and weight savings
- Improved temperature and power cycling
- High power density
- Small and light weight

© 2001 IXYS All rights reserved

Component

Symbol	Conditions	Characteristic Values min.	typ.	max.	
I_D, I_R	T_{VJ} = 125°C; $V_R = V_{RRM}$; $V_D = V_{DRM}$			5	mA
V_T	I_T = 300 A; T_{VJ} = 25°C			1.5	V
V_{TO}	For power-loss calculations only			0.8	V
r_T				2.4	mΩ
V_{GT}	V_D = 6 V; T_{VJ} = 25°C			1.5	V
	T_{VJ} = -40°C			1.6	V
I_{GT}	V_D = 6 V; T_{VJ} = 25°C			150	mA
	T_{VJ} = -40°C			200	mA
V_{GD}	T_{VJ} = 125°C; $V_D = {}^2/_3 V_{DRM}$			0.2	V
I_{GD}	T_{VJ} = 125°C; $V_D = {}^2/_3 V_{DRM}$			10	mA
I_L	T_{VJ} = 25°C; t_P = 10 ms I_G = 0.45 A; di_G/dt = 0.45 A/∝s			450	mA
I_H	T_{VJ} = 25°C; V_D = 6 V; R_{GK} = ∞			200	mA
t_{gd}	T_{VJ} = 25°C; V_D = ½ V_{DRM} I_G = 0.45 A; di_G/dt = 0.45 A/∝s			2	∝s
R_{thJC}	per Thyristor; DC			0.26	K/W
	per module			0.13	K/W
R_{thCH}	per Thyristor; DC		0,2		K/W
	per module		0,1		K/W
d_S	Creeping distance on surface			11.2	mm
d_A	Creeping distance in air			5.0	mm
a	Max. allowable acceleration			50	m/s^2

Dimensions in mm (1 mm = 0.0394")

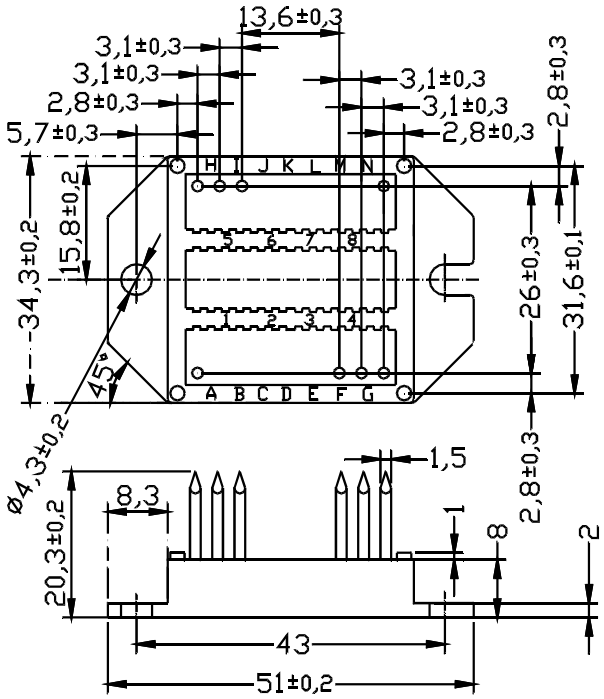

124

© 2001 IXYS All rights reserved