samtec

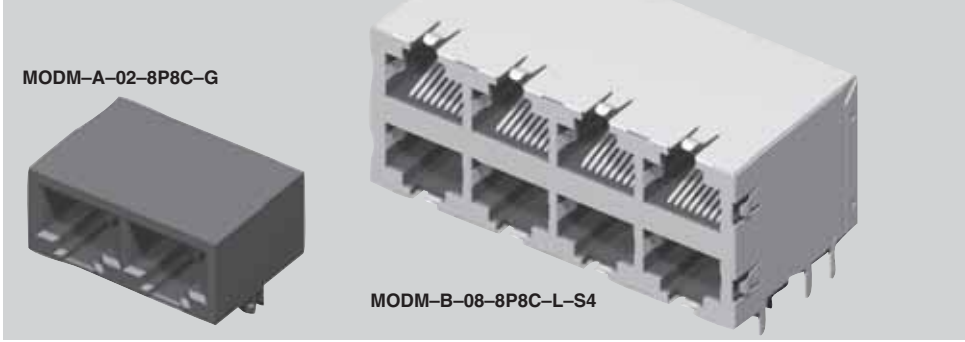


**MODM-A, MODM-B SERIES**

# GANGED IN-LINE/STACKED MODULAR JACKS

## SPECIFICATIONS

For complete specifications and recommended PCB layouts see www.samtec.com?MODM-A

**Insulator Material:** PBT Glass Filled
**Contact Material:** Phosphor Bronze
FILE NO. E225096
FILE NO. E244987
**Shield Material:** Copper Alloy
**Plating:** Gold on Contacts, Nickel on Shield, Gold on Tails
**Operating Temp Range:** -25°C to +90°C
**Current Rating:** 2 A per Contact
**Voltage Rating:** 120 VAC
**Contact Resistance:** 20 mΩ max
**Minimum Cycles:** 500
**System Applications:** CAT3
**Packaging:** Packaged and shipped in Bulk Packaging Trays; Trays suitable for automation are available upon request.
**RoHS Compliant:** Yes
**Lead–Free Solderable:** Yes (Wave Solder only)

**MODM – A – NO. OF PORTS – POSITIONS CONTACTS – PLATING – SHIELD OPTION**

**–02 thru –06, –08, –10**

**–8P8C**
= 8 Positions 8 Contacts per port

**–G**
= 15µ" (0,38µm) Gold on Mating Area, Gold Flash on Tails

**–E**
= 50µ" (1,27µm) Gold on Mating Area, Gold Flash on Tails

**APPLICATION SPECIFIC OPTION**
Other plating options available. Call Samtec.

(Leave Blank for Unshielded)

**–S**
= Shielded (No Panel Grounds) (–03 and –10 Not Available)

**–S4**
= Shielded with Top, Bottom and Side Panel Grounds (Requires –02, –04 or –08 ports)

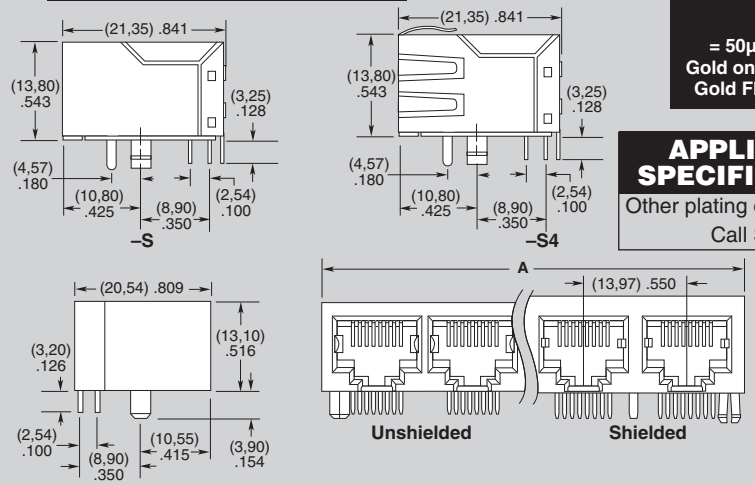


| NO. OF PORTS | A Unshielded | A Shielded |
|---|---|---|
| –02 | (30,46) 1.199 | (31,00) 1.220 |
| –03 | (44,43) 1,749 | N/A |
| –04 | (58,40) 2.299 | (58,94) 2.320 |
| –05 | (72,37) 2.849 | (72,91) 2.870 |
| –06 | (86,34) 3.399 | (86,88) 3.420 |
| –08 | (114,28) 4.499 | (114,90) 4.524 |
| –10 | (128,28) 5.050 | N/A |

## SPECIFICATIONS

For complete specifications and recommended PCB layouts see www.samtec.com?MODM-B

**Insulator Material:** PBT Glass Filled
**Contact Material:** Phosphor Bronze
FILE NO. E225096
FILE NO. E244987
**Shield Material:** Copper Alloy
**Plating:** Gold on Contacts, Nickel on Shield, Gold on Tails
**Operating Temp Range:** -25°C to +90°C
**Current Rating:** 1.5 A per contact
**Voltage Rating:** 120 VAC max
**Contact Resistance:** 20 mΩ max
**Minimum Cycles:** 500
**System Applications:** CAT3
**Packaging:** Packaged and shipped in Bulk Packaging Trays; Trays suitable for automation are available upon request.
**RoHS Compliant:** Yes
**Lead–Free Solderable:** Yes (Wave Solder only)

**MODM – B – NO. OF PORTS – POSITIONS CONTACTS – PLATING – OPTIONS**

**–02, –04, –06, –08, –12, –16**

**–8P8C**
= 8 Positions 8 Contacts per port

**–L**
= 15µ" (0,38 µm) Gold on Mating Area, Gold Flash on Tails

**–U**
= 50µ" (1,27µm) Gold on Mating Area, Gold Flash on Tails

**APPLICATION SPECIFIC OPTION**
Other plating options available. Call Samtec.

(Leave Blank for Unshielded)

**–S4**
= Shielded with Top, Bottom and Side Panel Grounds (–02 port does not have panel grounds)

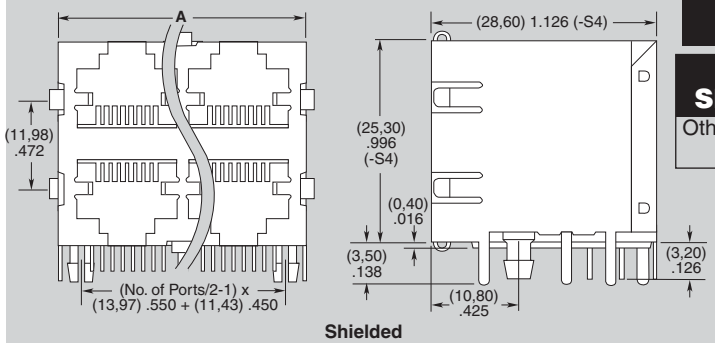


| NO. OF PORTS | A Unshielded | A Shielded |
|---|---|---|
| –02 | (16,50) .650 | (17,25) 0.679 |
| –04 | (30,50) 1.200 | (31,25) 1.230 |
| –06 | (44,50) 1.752 | (45,25) 1.781 |
| –08 | (58,50) 2.303 | (59,25) 2.333 |
| –12 | (86,50) 3.406 | (87,25) 3.435 |
| –16 | (114,50) 4.508 | (115,25) 4.537 |

*Due to technical progress, all designs, specifications and components are subject to change without notice.*