samtec

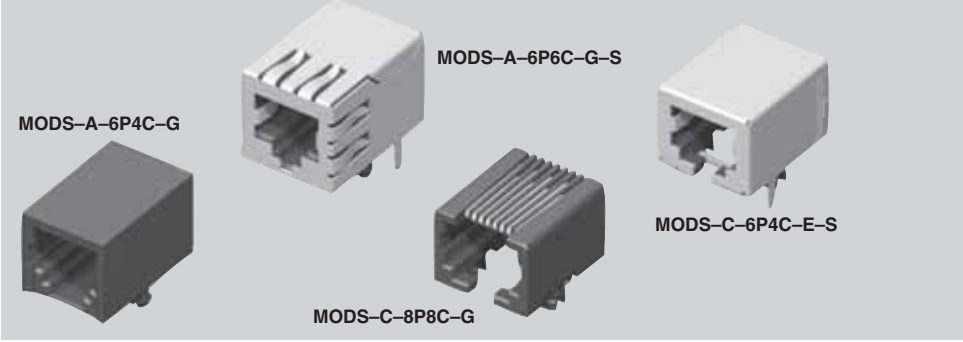

MODS-A, MODS-C SERIES

SINGLE RIGHT ANGLE MODULAR JACKS

SPECIFICATIONS

For complete specifications and recommended PCB layouts see www.samtec.com?MODS-A or www.samtec.com?MODS-C

Insulator Material: PBT Glass Filled
Contact Material: Phosphor Bronze
Shield Material: Copper Alloy
Plating: Gold on Contacts, Nickel on Shield
Operating Temp Range: -25°C to +90°C
Current Rating: 1.5 A per contact
Voltage Rating: 120 VAC
Contact Resistance: 20 mΩ max
Minimum Cycles: 500
System Application: CAT3
Packaging: Packaged and shipped in Bulk Packaging Trays; Trays suitable for automation are available upon request.
RoHS Compliant: Yes
Lead–Free Solderable: Yes (Wave Solder only)

UL FILE NO. E225096 FILE NO. E244987

APPLICATION SPECIFIC OPTION

Other plating options available. Call Samtec.

MODS – A – POSITIONS CONTACTS – PLATING – SHIELD OPTION

POSITIONS CONTACTS

–6P4C = 6 Positions 4 Contacts
–6P6C = 6 Positions 6 Contacts
–8P8C = 8 Positions 8 Contacts

PLATING

–G
= 15µ" (0,38 µm) Gold on Mating Area, Gold Flash on Tails

–E
= 50µ" (1,27µm) Gold on Mating Area, Gold Flash on Tails

SHIELD OPTION

(Leave Blank for Unshielded)

–S
= Shielded (No Panel Grounds)

–S4
= Shielded with Top, Bottom and Side Panel Grounds

POSITIONS CONTACTS	A	B	C
–6PXC	(13,21) .520	(20,54) .809	(12,70) .500
–8P8C	(15,24) .600		
–6PXC (–S)	(13,94) .549	(21,20) .835	(13,60) .535
–8P8C (–S)	(15,98) .629		

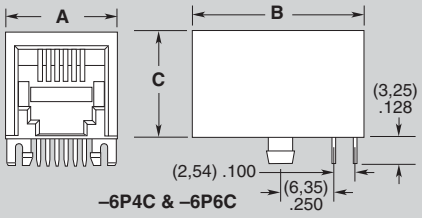

–6P4C & –6P6C

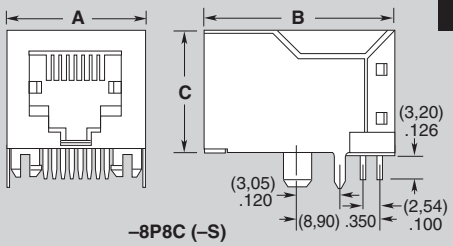

–8P8C (–S)

MODS – C – POSITIONS CONTACTS – PLATING – SHIELD OPTION

POSITIONS CONTACTS

–6P4C = 6 Positions 4 Contacts
–6P6C = 6 Positions 6 Contacts
–8P8C = 8 Positions 8 Contacts

PLATING

–G
= 15µ" (0,38 µm) Gold on Mating Area, Gold Flash on Tails

–E
= 50µ" (1,27µm) Gold on Mating Area, Gold Flash on Tails

SHIELD OPTION

(Leave Blank for Unshielded)

–S
= Shielded (No Panel Grounds)

–S1
= Shielded with Top and Bottom Panel Grounds

POSITIONS CONTACTS	A	B	C
–6PXC	(13,21) .520	(18,00) .709	(11,70) .461
–8P8C	(15,20) .598		
–6PXC (–S)	(14,00) .551	(18,80) .740	(12,20) .480
–8P8C (–S)	(15,90) .626		

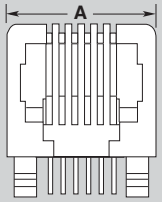

–6P4C & –6P6C

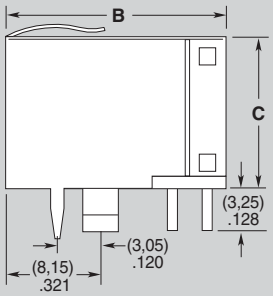

–8P8C (–S1)

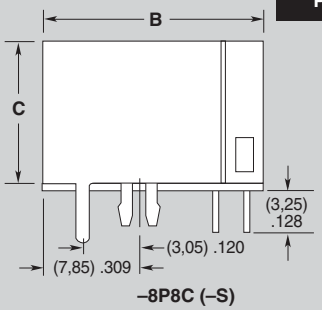

–8P8C (–S)

Due to technical progress, all designs, specifications and components are subject to change without notice.