samtec

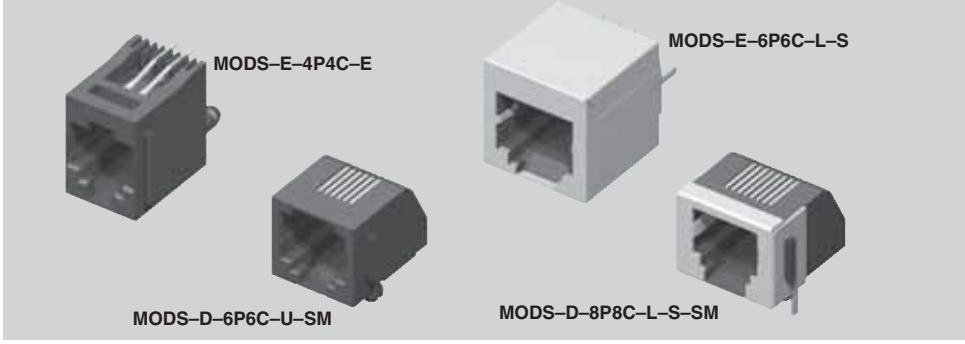

MODS-D, MODS-E SERIES

SINGLE VERTICAL & SMT MODULAR JACKS

SPECIFICATIONS

For complete specifications and recommended PCB layouts see www.samtec.com?MODS-D

Insulator Material: Nylon 46/ PBT Glass Filled (Nylon for -SM, PBT for -TH)
Contact Material: Phosphor Bronze
Shield Material: Copper Alloy
Plating: Gold on Contacts, Nickel on Shield, Tin on Tails
Operating Temp Range: -25°C to +90°C
Current Rating: 1.5 A per contact
Voltage Rating: 120 VAC
Contact Resistance: 20 mΩ max
Minimum Cycles: 500
System Applications: CAT3
Packaging: Packaged and shipped in Bulk Packaging Trays; Trays suitable for automation are available upon request.
RoHS Compliant: Yes
Lead–Free Solderable: –SM=Yes –TH=Yes (Wave Solder only)

FILE NO. E225096
FILE NO. E244987

MODS – D – POSITIONS CONTACTS – PLATING – SHIELD OPTION – TAIL

POSITIONS CONTACTS
- **–6P4C** = 6 Positions 4 Contacts
- **–6P6C** = 6 Positions 6 Contacts
- **–8P8C** = 8 Positions 8 Contacts

PLATING
- **–L** = 15µ" (0,38 µm) Gold on Mating Area, Gold Flash on Tails
- **–U** = 50µ" (1,27µm) Gold on Mating Area, Gold Flash on Tails

SHIELD OPTION
- (Leave Blank for Unshielded)
- **–S** = Shielded
- **–N** = No Panel Stops (Unshielded Only)

TAIL
- **–SM** = Surface Mount
- **–TH** = Through-hole

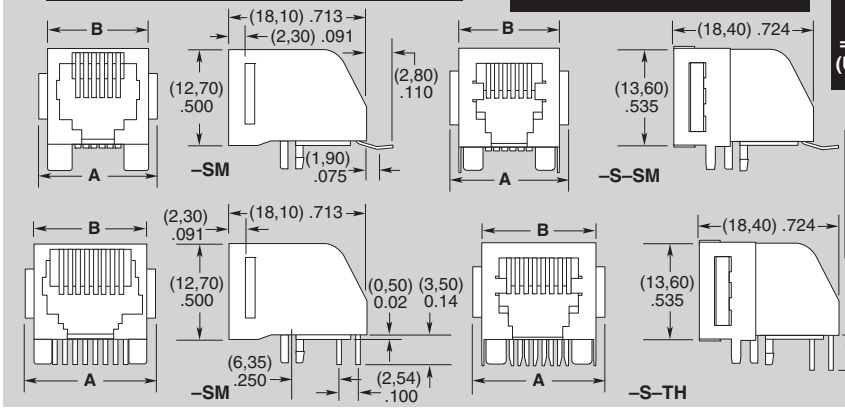

POSITIONS CONTACTS	A	B	B (-S)
–6PXC	(15,90) .626	(13,30) .524	(14,10) .555
–8P8C	(17,80) .701	(15,20) .598	(16,00) .630

SPECIFICATIONS

For complete specifications and recommended PCB layouts see www.samtec.com?MODS-E

Insulator Material: PBT Glass Filled
Contact Material: Phosphor Bronze
Shield Material: Copper Alloy
Plating: Gold on Contacts, Nickel on Shield
Operating Temp Range: -25°C to +90°C
Current Rating: 1.5 A per contact
Voltage Rating: 120 VAC
Contact Resistance: 20 mΩ max
Minimum Cycles: 500
System Applications: CAT3
Packaging: Packaged and shipped in Bulk Packaging Trays; Trays suitable for automation are available upon request.
RoHS Compliant: Yes
Lead–Free Solderable: Yes (Wave Solder only)

FILE NO. E225096

MODS – E – POSITIONS CONTACTS – PLATING – SHIELD OPTION

POSITIONS CONTACTS
- **–4P4C** = 4 Positions 4 Contacts
- **–6P4C** = 6 Positions 4 Contacts
- **–6P6C** = 6 Positions 6 Contacts
- **–8P8C** = 8 Positions 8 Contacts

PLATING

Unshielded Only
- **–G** = 15µ" (0,38 µm) Gold on Mating Area, Gold Flash on Tails
- **–E** = 50µ" (1,27µm) Gold on Mating Area, Gold Flash on Tails

Shielded Only
- **–L** = 15µ" (0,38 µm) Gold on Mating Area, Gold Flash on Tails
- **–U** = 50µ" (1,27µm) Gold on Mating Area, Gold Flash on Tails

SHIELD OPTION
- (Leave Blank for Unshielded)
- **–S** = Shielded (-4P4C and Panel Stops N/A)

POSITIONS CONTACTS	A	B
–4P4C	(13,80) .543	(11,43) .450
–6PXC	(15,90) .626	(13,46) .530
–8P8C	(17,90) .705	(15,50) .610

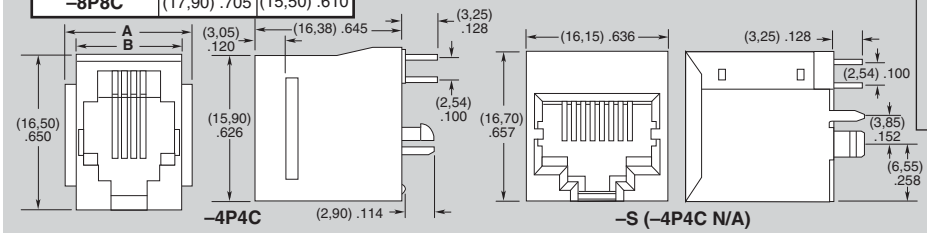

APPLICATION SPECIFIC OPTION

- No panel stop option available
- Other plating options available

Call Samtec.

Due to technical progress, all designs, specifications and components are subject to change without notice.