Monolithic Power Systems

MP1251/MP1252

SMBus
Voltage Source

PRELIMINARY

General Description

The MP1251 and MP1252 are voltage sources with SMBus interfaces. These ICs have a D/A converter that outputs a voltage based on an internal reference. The MP1251 output voltage has 32 voltage steps from 0.0V to 2.0V. The MP1252 output voltage has 32 voltage steps from 0.0V to 1.9V.

The MP1251 and MP1252 have three additional outputs based on the unused three lower bits on the SMBus interface. These outputs can be used for additional controls.

Features

- D/A converter.
- Series/Synchronous SMBus interface
- 32 step output voltage control
- Three outputs from unused SMBus data bits.
- 2% Internal Reference

Applications

- Ideal for brightness control of CCFL in notebook applications

Ordering Information

Part Number *	Package	Temperature
MP1251DS	SOIC8	-40°C to +85°C
MP1252DS	SOIC8	-40°C to +85°C

* For Tape & Reel use suffix - Z (i.e., MP1251DS-Z)

Figure 1: Block Diagram

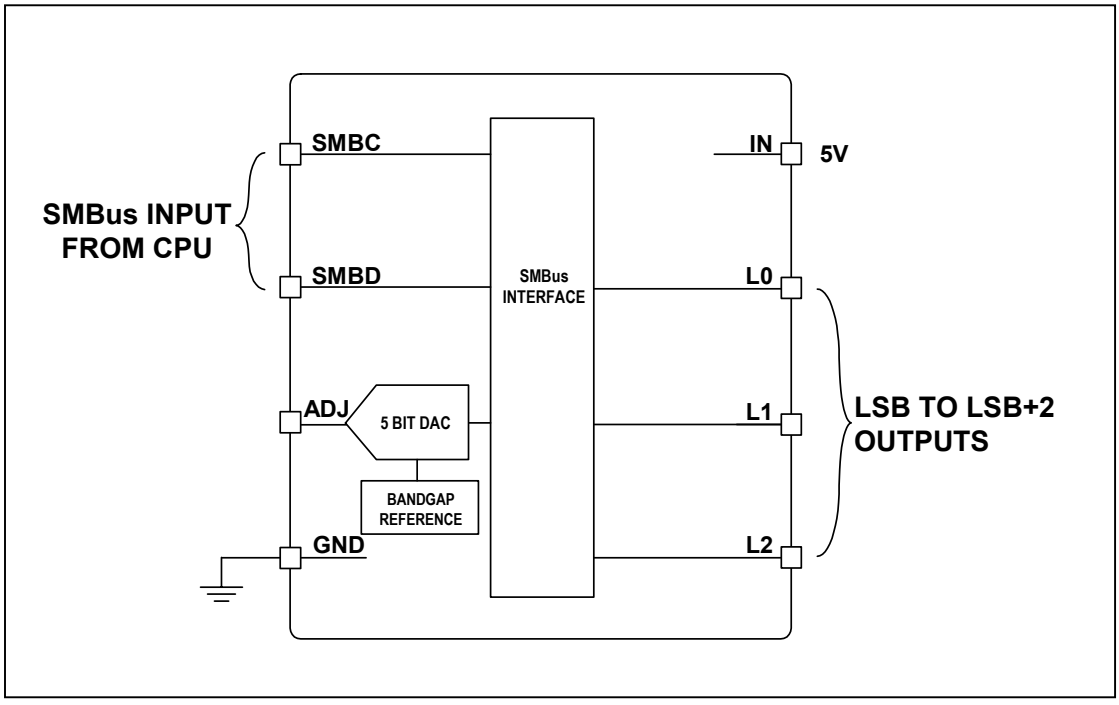

Absolute Maximum Ratings

V_{IN}	7.0V
Logic Inputs	-0.3V to V_{IN} +0.3V
Junction Temperature	150Deg°C
Storage Temp	-55Deg°C to 150Deg°C

Recommended Operation Conditions

V_{IN}	4.5V to 5.5V
Operating Temperature	-40 to +85°C

Thermal Characteristics

Thermal Resistance SOIC8	105°C/W

Electrical Characteristics (Unless otherwise specified T_A=25°C)

Parameters	Symbol	Conditions	Min	Typ	Max	Units
Dimming D/A Output (ADJ- Floating)						
Maximum Level (MP1251)		V_{IN}=5V, Data=00000xxx	1.925	2.0	2.075	V
Minimum Level (MP1251)		V_{IN}=5V, Data=11111xxx	0.0	0.05	0.1	V
Maximum Level (MP1252)		V_{IN}=5V, Data=00000xxx	1.825	1.9	1.975	V
Minimum Level (MP1252)		V_{IN}=5V, Data=11111xxx	0.0	0.05	0.1	V
Power-on Reset Default				3.5		V
Setting Time				10		µS
D/A output levels				32		
Supply Voltage						
V_{IN} current – Active			150	200	300	µA

Note: V_{ADJ} (DATA [7:3]) = (1- (DATA [7:3] / 31))* Maximum Level

Pin Description

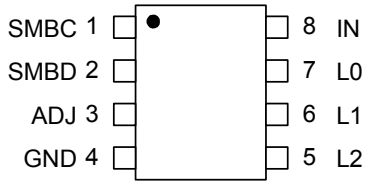

Table 1: Pin Designators

Pin #	Pin Name	Pin Function
1	SMBC	SMBus Clock Input/Output
2	SMBD	SMBus Data Input/Output
3	ADJ	The output of the brightness D/A converter.
4	GND	Ground
5	L2	Output of data bus bit D2
6	L1	Output of data bus bit D1
7	L0	Output of data bus bit D0
8	IN	Supply Voltage

Two-Wire Bus Register Description

The register map between the SMBus interface and the SMBus Host:

Register Map

Address

SMBus Protocol: Read or Write Byte
Input/Output: Byte-bit flags mapped as follows:

# Bits	Name	R / W	Value	Description
8	A7 - A0	W	01011000 (58h)	1. Bits A7 – A1 are the base address. 2. A0 is the read selection bit. A0 is zero for write. 3. The host outputs both write and read addresses.
		R	01011001 (59h)	

Index

# Bits	Name	R / W	Value	Description
8	B7 - B0	W	10101010 (AAh)	1. The host outputs the write index. 2. The MP1251 or MP1252 outputs the read index.
		R	00000000 (00h)	

Brightness

# Bits	Name	R / W	Default	Description
8	D7 - D0	R / W	00000000	1. Bits D7 – D3 contain the brightness level settings. 2. Only D7 – D3 are used to step the 32 levels. 3. When D7 – D0 = 1111 1xxx, the MP1251 or MP1252 outputs the minimum voltage. When D7 – D0 = 0000 0xxx, the outputs are at a maximum level. 4. D2 – D0 are outputted as L2 – L0 for the customer use. 5. The host outputs the write brightness. 6. The MP1251 or MP1252 outputs the read brightness.

Note: V_{ADJ} (DATA [7:3]) = (1- (DATA [7:3] / 31))* Maximum Level

Communication Protocol

The MP1251 or MP1252 uses “Write Byte Protocol” and “Read Byte Protocol” to communicate with the host. The “Write Byte Protocol” can be used by the host to write to the Data Register, while the “Read Byte Protocol” is used to read data from the Data Register. The base address for the SMBus is 58hex.

[ ] MP1251 or MP1252 to Master

[ ] Master to MP1251 or MP1252

Two Wire Read Protocols

	ADDRESS			INDEX		DATA BYTE		
	7	0						
S	**0101100**	**1**	**A**	**0000000 0**	**A**	**Brightness**	**A**	**P**
Start Condition		Read						Stop Condition

A = Acknowledge

Two Wire Write Protocols

Write D/A Output

	ADDRESS			INDEX		DATA BYTE		
	7	0						
S	**0101100**	**0**	**A**	**1010101 0**	**A**	**Brightness**	**A**	**P**
Start Condition		Read						Stop Condition

A = Acknowledge

Packaging

SOIC8

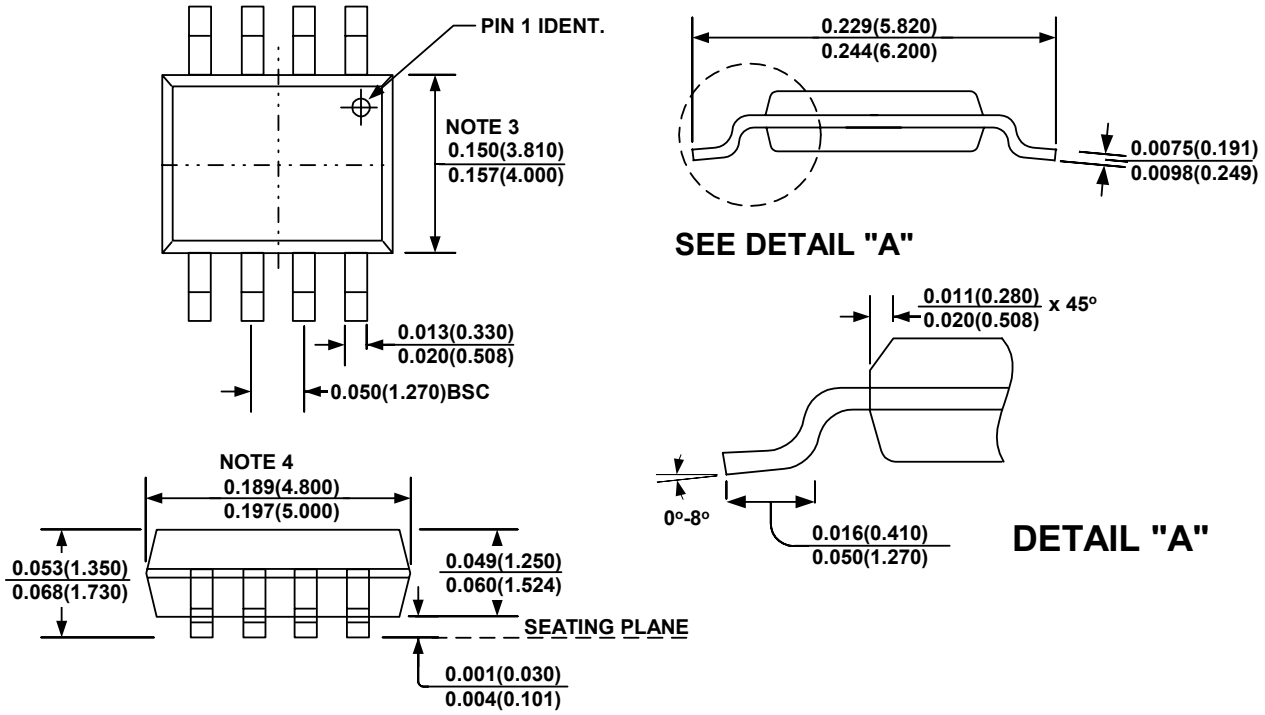

NOTE:

1) Control dimension is in inches. Dimension in bracket is millimeters.
2) The length of the package does not include mold flash. Mold flash shall not exceed 0.006in. (0.15mm) per side. With the mold flash included, over-all length of the package is 0.2087in. (5.3mm) max.
3) The width of the package does not include mold flash. Mold flash shall not exceed 0.10in. (0.25mm) per side. With the mold flash included, over-all width of the package is 0.177in. (4.5mm) max.

NOTICE: MPS believes the information in this document to be accurate and reliable. However, it is subject to change without notice. Please contact the factory for current specifications. No responsibility is assumed by MPS for its use or fit to any application, nor for infringement of patent or other rights of third parties.

© 2003 MPS, Inc.