

MRF24J40MC
Data Sheet

2.4 GHz IEEE Std. 802.15.4™ RF Transceiver Module with PA/LNA and External Antenna Connector

© 2019 Microchip Technology Inc.

Note the following details of the code protection feature on Microchip devices:

- Microchip products meet the specification contained in their particular Microchip Data Sheet.
- Microchip believes that its family of products is one of the most secure families of its kind on the market today, when used in the intended manner and under normal conditions.
- There are dishonest and possibly illegal methods used to breach the code protection feature. All of these methods, to our knowledge, require using the Microchip products in a manner outside the operating specifications contained in Microchip's Data Sheets. Most likely, the person doing so is engaged in theft of intellectual property.
- Microchip is willing to work with the customer who is concerned about the integrity of their code.
- Neither Microchip nor any other semiconductor manufacturer can guarantee the security of their code. Code protection does not mean that we are guaranteeing the product as "unbreakable."

Code protection is constantly evolving. We at Microchip are committed to continuously improving the code protection features of our products. Attempts to break Microchip's code protection feature may be a violation of the Digital Millennium Copyright Act. If such acts allow unauthorized access to your software or other copyrighted work, you may have a right to sue for relief under that Act.

Information contained in this publication regarding device applications and the like is provided only for your convenience and may be superseded by updates. It is your responsibility to ensure that your application meets with your specifications. MICROCHIP MAKES NO REPRESENTATIONS OR WARRANTIES OF ANY KIND WHETHER EXPRESS OR IMPLIED, WRITTEN OR ORAL, STATUTORY OR OTHERWISE, RELATED TO THE INFORMATION, INCLUDING BUT NOT LIMITED TO ITS CONDITION, QUALITY, PERFORMANCE, MERCHANTABILITY OR FITNESS FOR PURPOSE**.** Microchip disclaims all liability arising from this information and its use. Use of Microchip devices in life support and/or safety applications is entirely at the buyer's risk, and the buyer agrees to defend, indemnify and hold harmless Microchip from any and all damages, claims, suits, or expenses resulting from such use. No licenses are conveyed, implicitly or otherwise, under any Microchip intellectual property rights unless otherwise stated.

For information regarding Microchip's Quality Management Systems, please visit www.microchip.com/quality.

Trademarks

The Microchip name and logo, the Microchip logo, Adaptec, AnyRate, AVR, AVR logo, AVR Freaks, BesTime, BitCloud, chipKIT, chipKIT logo, CryptoMemory, CryptoRF, dsPIC, FlashFlex, flexPWR, HELDO, IGLOO, JukeBlox, KeeLoq, Kleer, LANCheck, LinkMD, maXStylus, maXTouch, MediaLB, megaAVR, Microsemi, Microsemi logo, MOST, MOST logo, MPLAB, OptoLyzer, PackeTime, PIC, picoPower, PICSTART, PIC32 logo, PolarFire, Prochip Designer, QTouch, SAM-BA, SenGenuity, SpyNIC, SST, SST Logo, SuperFlash, Symmetricom, SyncServer, Tachyon, TempTrackr, TimeSource, tinyAVR, UNI/O, Vectron, and XMEGA are registered trademarks of Microchip Technology Incorporated in the U.S.A. and other countries.

APT, ClockWorks, The Embedded Control Solutions Company, EtherSynch, FlashTec, Hyper Speed Control, HyperLight Load, IntelliMOS, Libero, motorBench, mTouch, Powermite 3, Precision Edge, ProASIC, ProASIC Plus, ProASIC Plus logo, Quiet-Wire, SmartFusion, SyncWorld, Temux, TimeCesium, TimeHub, TimePictra, TimeProvider, Vite, WinPath, and ZL are registered trademarks of Microchip Technology Incorporated in the U.S.A.

Adjacent Key Suppression, AKS, Analog-for-the-Digital Age, Any Capacitor, AnyIn, AnyOut, BlueSky, BodyCom, CodeGuard, CryptoAuthentication, CryptoAutomotive, CryptoCompanion, CryptoController, dsPICDEM, dsPICDEM.net, Dynamic Average Matching, DAM, ECAN, EtherGREEN, In-Circuit Serial Programming, ICSP, INICnet, Inter-Chip Connectivity, JitterBlocker, KleerNet, KleerNet logo, memBrain, Mindi, MiWi, MPASM, MPF, MPLAB Certified logo, MPLIB, MPLINK, MultiTRAK, NetDetach, Omniscient Code Generation, PICDEM, PICDEM.net, PICkit, PICtail, PowerSmart, PureSilicon, QMatrix, REAL ICE, Ripple Blocker, SAM-ICE, Serial Quad I/O, SMART-I.S., SQI, SuperSwitcher, SuperSwitcher II, Total Endurance, TSHARC, USBCheck, VariSense, ViewSpan, WiperLock, Wireless DNA, and ZENA are trademarks of Microchip Technology Incorporated in the U.S.A. and other countries.

SQTP is a service mark of Microchip Technology Incorporated in the U.S.A.

The Adaptec logo, Frequency on Demand, Silicon Storage Technology, and Symmcom are registered trademarks of Microchip Technology Inc. in other countries.

GestIC is a registered trademark of Microchip Technology Germany II GmbH & Co. KG, a subsidiary of Microchip Technology Inc., in other countries.

All other trademarks mentioned herein are property of their respective companies.

© 2019, Microchip Technology Incorporated, All Rights Reserved.

ISBN: 978-1-5224-4926-3

MRF24J40MC

2.4 GHz IEEE Std. 802.15.4™ RF Transceiver Module with PA/LNA and External Antenna Connector

Features:

- IEEE Std. 802.15.4™ Compliant RF Transceiver
- Supports ZigBee®, MiWi™ Development Environment Proprietary Wireless Networking Protocols
- 4-Wire Serial Peripheral Interface (SPI) with Interrupt
- Small size: 0.9" x 1.3" (22.9 mm x 33.0 mm), Surface Mountable: Pin Compatible with MRF24J40MB
- Integrated Crystal, Internal Voltage Regulator, Matching Circuitry, Power Amplifier, Low Noise Amplifier
- External Antenna Connector : Ultra Miniature Coaxial (U.FL), 50Ω
- Easy Integration into Final Product : Minimize Product Development, Quicker Time to Market
- Radio Regulation Certified for United States (FCC), Canada (IC), Europe (ETSI) and Australia/New Zealand (C-TICK)
- Compatible with Microchip microcontroller families (PIC16, PIC18, PIC24, dsPIC33 and PIC32)
- Range up to 4000 ft

Operational:

- Operating Voltage: 3.0V – 3.6V (3.3V typical)
- Temperature Range: -40°C to +85°C Industrial
- Low-Current Consumption:
  - Rx Mode: 25 mA (typical)
  - Tx Mode: 120 mA (typical)
  - Sleep: 12 μA (typical)

RF/Analog Features:

- ISM Band 2.405 GHz – 2.475 GHz Operation
- Data Rate: 250 kbps
- -108 dBm Typical Sensitivity with -23 dBm Maximum Input Level
- +19 dBm Typical Output Power with 45 dB Tx Power Control Range
- Integrated Low Phase Noise VCO, Frequency Synthesizer and PLL Loop Filter
- Digital VCO and Filter Calibration
- Integrated RSSI ADC and I/Q DACs
- Integrated LDO
- High Receiver RSSI Dynamic Range

MAC/Baseband Features:

- Hardware CSMA-CA Mechanism, Automatic ACK Response and FCS Check
- Independent Beacon, Transmit and GTS FIFO
- Supports all CCA modes and RSS/LQI
- Automatic Packet Retransmit Capable
- Hardware Security Engine (AES-128) with CTR, CCM and CBC-MAC modes
- Supports Encryption and Decryption for MAC Sub layer and Upper Layer

Pin Diagram:

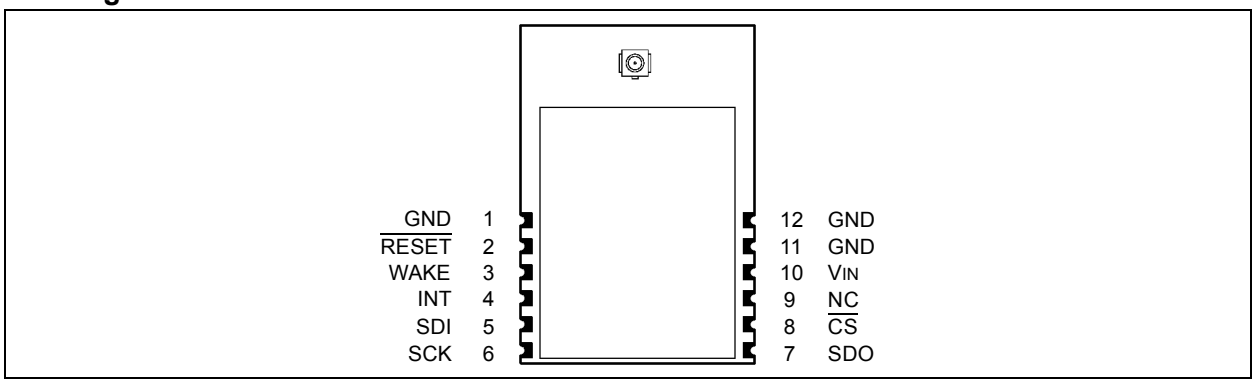

Table of Contents

1.0 Device Overview 5
2.0 Circuit Description 11
3.0 Regulatory Approval 17
4.0 Electrical Characteristics 23
Appendix A: Revision History 25
The Microchip WebSite 27
Customer Change Notification Service 27
Customer Support 27
Product Identification System 29

TO OUR VALUED CUSTOMERS

It is our intention to provide our valued customers with the best documentation possible to ensure successful use of your Microchip products. To this end, we will continue to improve our publications to better suit your needs. Our publications will be refined and enhanced as new volumes and updates are introduced.

If you have any questions or comments regarding this publication, please contact the Marketing Communications Department via E-mail at **docerrors@microchip.com** or fax the **Reader Response Form** in the back of this data sheet to (480) 792-4150. We welcome your feedback.

Most Current Data Sheet

To obtain the most up-to-date version of this data sheet, please register at our Worldwide Web site at:

http://www.microchip.com

You can determine the version of a data sheet by examining its literature number found on the bottom outside corner of any page. The last character of the literature number is the version number, (e.g., DS30000A is version A of document DS30000).

Errata

An errata sheet, describing minor operational differences from the data sheet and recommended workarounds, may exist for current devices. As device/documentation issues become known to us, we will publish an errata sheet. The errata will specify the revision of silicon and revision of document to which it applies.

To determine if an errata sheet exists for a particular device, please check with one of the following:

- Microchip's Worldwide Web site; **http://www.microchip.com**
- Your local Microchip sales office (see last page)

When contacting a sales office, please specify which device, revision of silicon and data sheet (include literature number) you are using.

Customer Notification System

Register on our web site at **www.microchip.com** to receive the most current information on all of our products.

 © 2019 Microchip Technology Inc.

1.0 DEVICE OVERVIEW

The MRF24J40MC is a 2.4 GHz IEEE Std. 802.15.4™ compliant, surface mount module with integrated crystal, internal voltage regulator, matching circuitry, Power Amplifier (PA), Low Noise Amplifier (LNA) with 50Ω external antenna connector. The MRF24J40MC module operates in the non-licensed 2.4 GHz frequency band. The integrated module design frees the integrator from extensive RF and antenna design, and regulatory compliance testing allowing quicker time to market.

The MRF24J40MC module is compatible with Microchip's ZigBee®, and MiWi™ Development Environment software stacks. The MiWi Development Environment software stack including the source code is available as a free download, from the Microchip web site: http://www.microchip.com/wireless.

The MRF24J40MC module has received regulatory approvals for modular devices in the United States (FCC) and Canada (IC). Modular approval removes the need for expensive RF and antenna design, and allows the end user to place the MRF24J40MC module inside a finished product and does not require regulatory testing for an intentional radiator (RF transmitter). To maintain conformance, refer to module settings in **Section 3.1.1 "MRF24J40MC Settings"** for the United States and **Section 3.2.1 "MRF24J40MC Settings"** for Canada.

The MRF24J40MC module has been tested and conforms to ETS EN 300 328 V1.7.1 (2006-10) European Standards. The module tests can be applied toward final product certification and Declaration of Conformity (DoC). To maintain conformance for Europe, refer to module settings in **Section 3.3.1 "MRF24J40MC Settings"**. Additional testing may be required depending on the end application.

1.1 Interface Description

Figure 1-1 shows a simplified block diagram of the MRF24J40MC module. The module is based on the Microchip Technology MRF24J40 IEEE 802.15.4™ 2.4 GHz RF Transceiver IC. The module interfaces to many popular Microchip PIC® microcontrollers through a 4-wire SPI interface, interrupt, wake, reset, power and ground, as shown in Figure 1-2. Table 1-1 provides the pin descriptions.

Serial communication and module configuration for the MRF24J40MC module are documented in the *"MRF24J40 Data Sheet"* (DS39776). Refer to the datasheet for specific serial interface protocol and register definitions.

Also, see **Section 1.3 "Operation"** for specific register settings that are unique to the MRF24J40MC module.

FIGURE 1-1: PIC18FXXXX BLOCK DIAGRAM

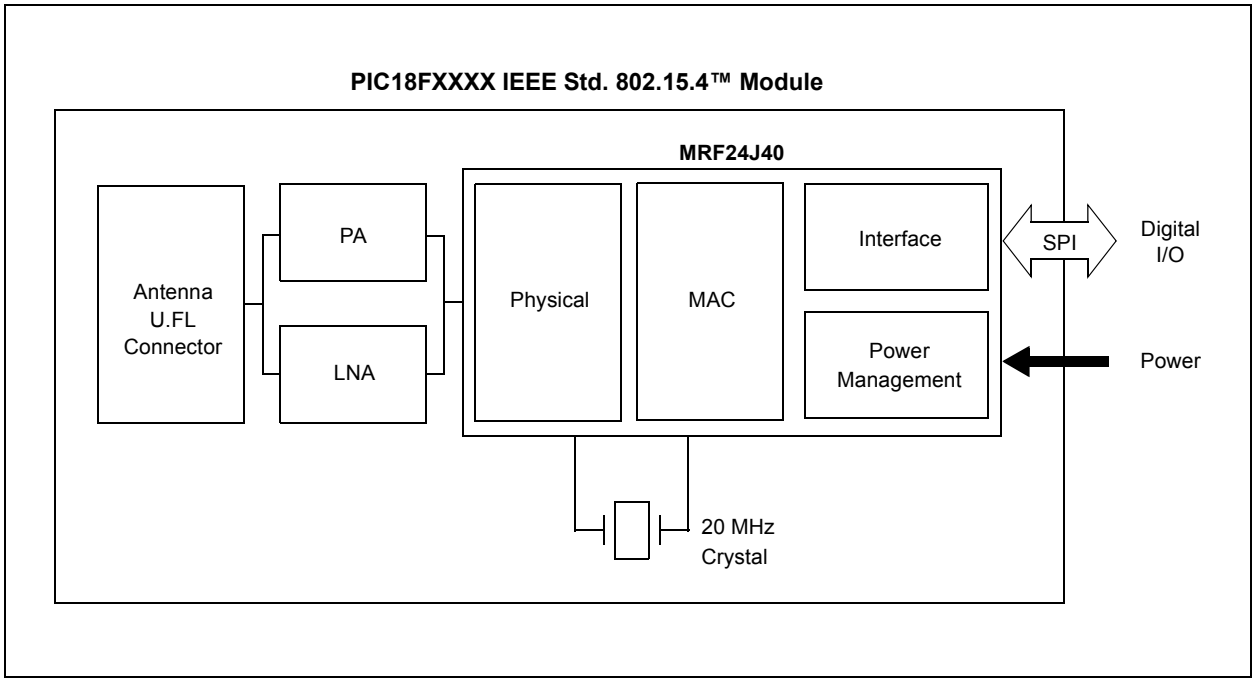

TABLE 1-1: PIN DESCRIPTION

Pin	Symbol	Type	Description
1	GND	Ground	Ground
2	$\overline{\text{RESET}}$	DI	Global hardware Reset pin
3	WAKE	DI	External wake-up trigger
4	INT	DO	Interrupt pin to microcontroller
5	SDI	DI	Serial interface data input
6	SCK	DI	Serial interface clock
7	SDO	DO	Serial interface data output from MRF24J40
8	$\overline{\text{CS}}$	DI	Serial interface enable
9	NC	—	No connection
10	VIN	Power	Power supply
11	GND	Ground	Ground
12	GND	Ground	Ground

Legend: Pin type abbreviation: D = Digital, I = Input, O = Output

FIGURE 1-2: MICROCONTROLLER TO MRF24J40MC INTERFACE

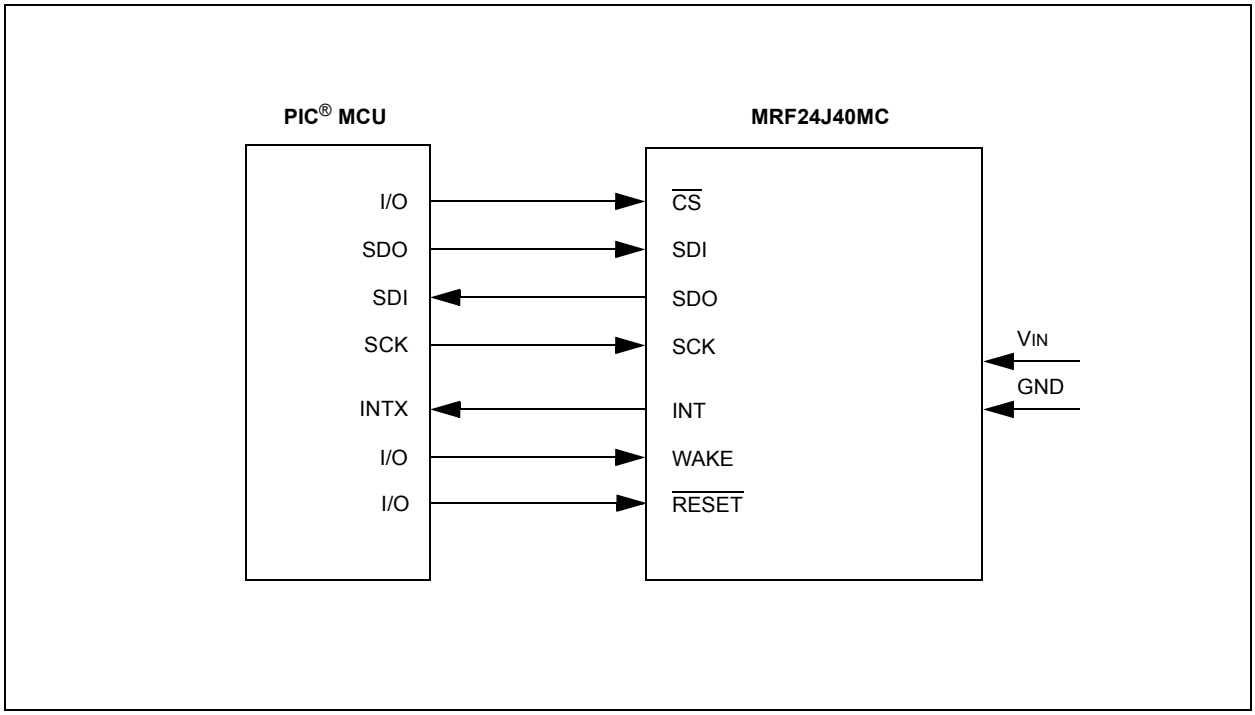

 © 2019 Microchip Technology Inc.

1.2 Mounting Details

The MRF24J40MC is a surface mountable module. Module dimensions are shown in Figure 1-3. The module Printed Circuit Board (PCB) is 0.032" thick with castellated mounting points on the edge. Figure 1-4 is a recommended host PCB footprint for the MRF24J40MC .

The MRF24J40MC has 50Ω ultra miniature coaxial (U.FL) connector.

Caution: The U.FL connector is fragile and can only tolerate very limited number of insertions.

FIGURE 1-3: MODULE DETAILS

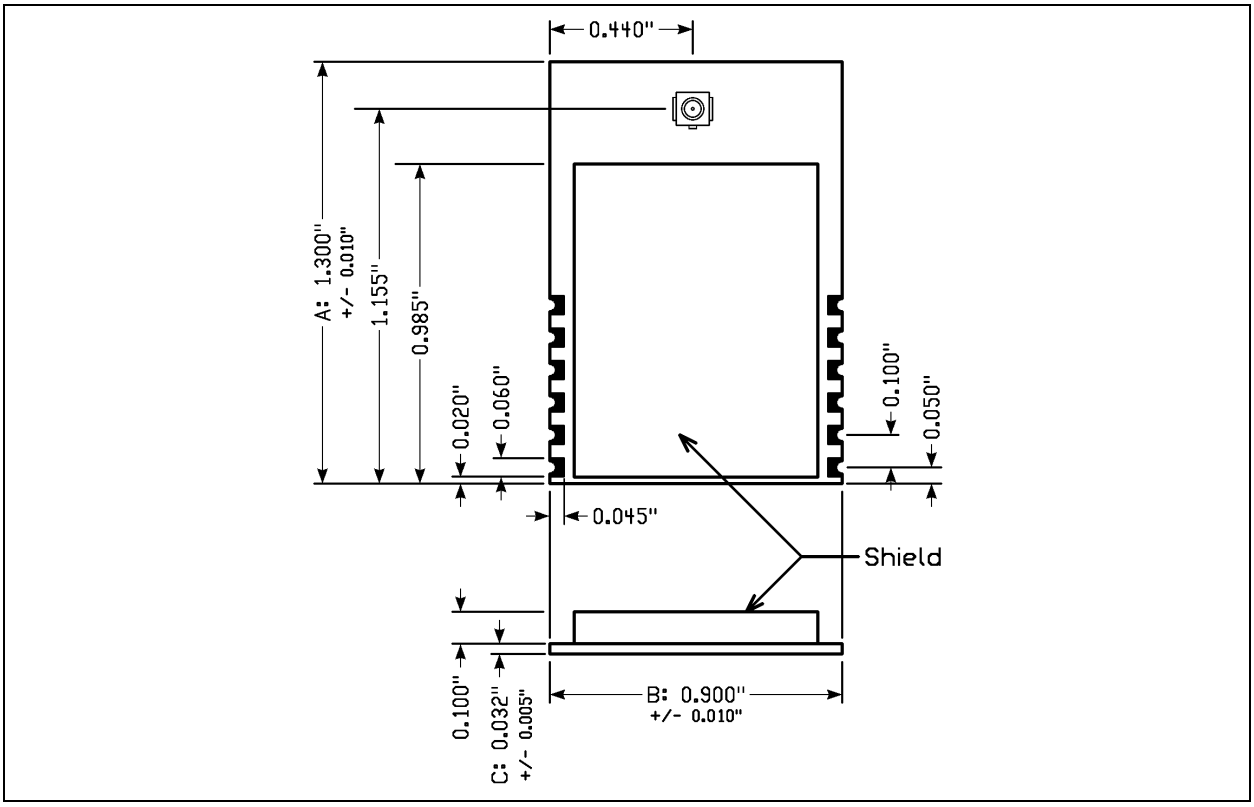

FIGURE 1-4: RECOMMENDED PCB FOOTPRINT

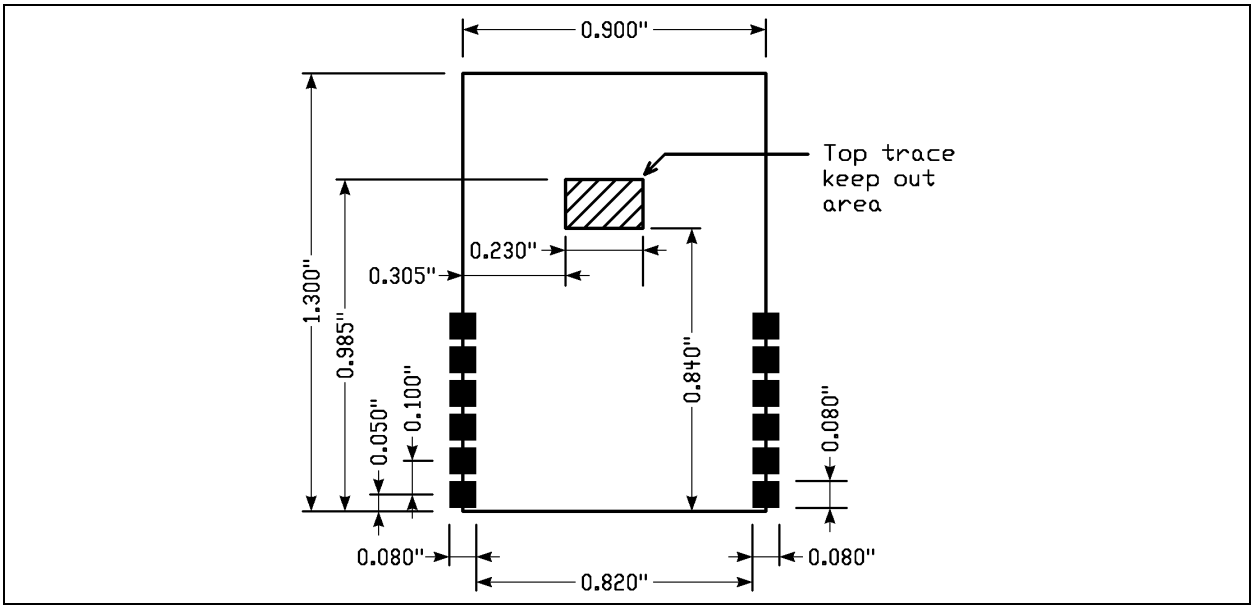

1.3 Operation

The MRF24J40MC module is based on the Microchip Technology MRF24J40 2.4 GHz IEEE 802.15.4 RF Transceiver IC. Serial communication and configuration are documented in the "*MRF24J40 Data Sheet*" (DS39776).

This section emphasizes operational settings that are unique to the MRF24J40MC module design that must be followed for proper operation.

1.3.1 PA/LNA CONTROL

Operation of the PA U3 and LNA U2 is controlled by the MRF24J40 internal RF state machine through RF switches, U1 and U4, and the GPIO1 and GPIO2 pins on the MRF24J40. Figure 1-5 shows the PA/LNA block diagram. Figure 2-2 is the schematic diagram for the module.

The internal RF state machine is configured for the PA/LNA Mode by setting TESTMODE (0x22<2:0>) = `111`. Pins GPIO1 and GPIO2 control the RF switches, PA and LNA automatically when the MRF24J40 receives and transmits data.

Note:	A complete explanation of the operation of the PA/LNA control is documented in the *"MRF24J40 Data Sheet"* (DS39776), Section 4.2 "External PA/LNA Control".

Voltage regulator U5 supplies a regulated 2.2V to the PA. This provides a stable voltage to the PA over the VIN voltage range of the module. U5 is enabled or shutdown from GPIO3. Ensure that the GPIO3 direction has been set to output (TRISGP3 (0x34<3>) = `1`). Setting a logic high (GPIO3(0x33<3>) = `1`) enables the voltage regulator and supplies voltage to the PA. Setting a logic low (GPIO3 (0x33<3>) = `0`) will shutdown the voltage regulator, disabling the PA, and provides the lowest shutdown current.

FIGURE 1-5: PA/LNA BLOCK DIAGRAM

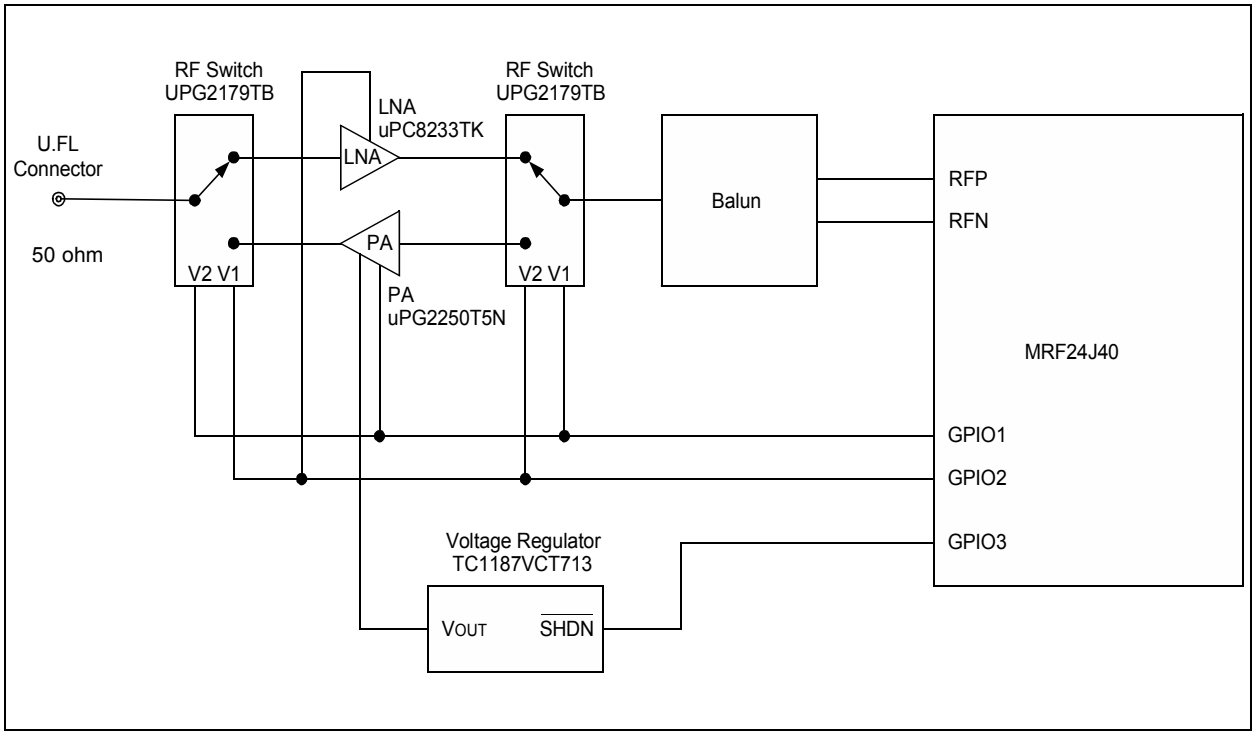

© 2019 Microchip Technology Inc.

1.3.2 ENERGY DETECTION (ED)

Before performing an energy detection (see Section 3.6.1 “RSSI Firmware Request (RSSI Mode 1)” in the *“MRF24J40 Data Sheet”* (DS39776)), perform the following steps:

1. Configure the internal RF state machine to normal operation (TESTMODE (0x22F<2:0>) = 000).
2. Configure GPIO2 and GPIO1 direction for output (TRISGP2 (0x34<2>) = 1 and TRISGP1 (0x34<1>) = 1).
3. Set GPIO2 (0x33<2>) = 1 and GPIO1 (0x32<1>) = 0. This enables the LNA and disables the PA.
4. Perform the energy detection following the steps in Section 3.6.1 “RSSI Firmware Request (RSSI Mode 1)” in the *“MRF24J40 Data Sheet”* (DS39776).

Note:	The LNA will amplify the received signal. The RSSI value will include the receive signal strength plus the LNA amplification.

1.3.3 SLEEP

To get the lowest power consumption from the MRF24J40MC module during Sleep, it is necessary to disable the PA, PA voltage regulator and LNA. To do this, perform the following steps:

1. Configure the internal RF state machine to normal operation (TESTMODE (0x22F<2:0>) = 000).
2. Configure the GPIO3, GPIO2 and GPIO1 direction for output (TRISGP3 (0x34<3>) = 1, TRISGP2 (0x34<2>) = 1 and TRISGP1 (0x34<1>) = 1).
3. Set GPIO2 (0x33<2>) = 0 and GPIO1 (0x32<1>) = 0. This disables the LNA and the PA.
4. Set GPIO3 (0x33<3>) = 0. This shuts down the voltage regulator U5 that supplies 2.2 volts to the PA.
5. Put the MRF24J40 to Sleep following the steps in the *“MRF24J40 Data Sheet”* (DS39776).

When waking the module, re-enable the PA/LNA Mode.

1.3.4 TRANSMIT POWER SETTINGS

Table 1-2 lists the power settings in register RFCON3 (0x203<7:3>) and the output power at antenna connector J1.

TABLE 1-2: TRANSMIT POWER SETTINGS

RFCON3 (0x203<7:3>)	MRF24J40 Power Setting	Output Power(1) (dBm)
11111	–36.3	–26.4
11110	–34.9	–25.2
11101	–33.7	–24.1
11100	–32.8	–23.4
11011	–31.9	–22.7
11010	–31.2	–22.4
11001	–30.5	–21.9
11000	–30.0	–21.6
10111	–26.3	–15.7
10110	–24.9	–14.5
10101	–23.7	–13.7
10100	–22.8	–12.9
10011	–21.9	–12.3
10010	–21.2	–11.8
10001	–20.5	–11.5
10000	–20.0	–11.1
01111	–16.3	–6.6
01110	–14.9	–5.5
01101	–13.7	–4.7
01100	–12.8	–4.0
01011	–11.9	–3.4
01010	–11.2	–2.9
01001	–10.5	–2.5
01000	–10.0	–2.0
00111	–6.3	10.7
00110	–4.9	18.0
00101	–3.7	18.5

Note 1: Typical output power at antenna connector J1, Channel 11, 50Ω impedance.

Note: Refer to **Section 3.0 "Regulatory Approval"** for the required maximum power setting necessary to maintain certification requirements for each country the module will be used.

 © 2019 Microchip Technology Inc.

2.0 CIRCUIT DESCRIPTION

The MRF24J40MC is a 2.4 GHz IEEE Std. 802.15.4™ compliant surface mount module with integrated crystal, internal voltage regulator, matching circuitry, power amplifier, low noise amplifier with 50Ω external antenna connector.

The MRF24J40MC module interfaces to many popular Microchip PIC microcontrollers through a 4-wire SPI Interface, interrupt, wake, reset, power and ground. An example application schematic is illustrated in Figure 2-1.

Serial communications and register definitions for the MRF24J40MC module are documented in the "*MRF24J40 Data Sheet*" (DS39776). Refer to this datasheet for specific serial interface protocol and register definitions. Also, see **Section 1.3 "Operation"** for specific register settings that are unique to the MRF24J40MC module.

2.1 External Antenna

The MRF24J40MC module has a 50Ω ultra miniature coaxial (U.FL) connector to connect to an external 2.4 GHz antenna.

Caution: The U.FL connector is fragile and can only tolerate very limited number of insertions.

The choice of antenna is limited to the antenna types the module has been tested with. Refer to the respective country in **Section 3.0 "Regulatory Approval"** for a list of tested and approved antenna types that may be used with the MRF24J40MC module.

2.2 Module Schematic

A schematic diagram of the module is illustrated in Figure 2-2 and the Bill of Materials (BOM) is shown in Table 2-1.

The MRF24J40MC module is based on the Microchip Technology MRF24J40 IEEE 802.15.4™ 2.4 GHz RF Transceiver IC (U6). The Serial I/O (SCK, SDI, SDO and $\overline{CS}$), $\overline{RESET}$, WAKE and INT pins are brought out to the module pins. The SDO signal is tri-state buffered by U7 to solve a silicon errata, where the SDO signal does not release to a high-impedance state, after the $\overline{CS}$ pin returns to its inactive state.

Crystal, X1, is a 20 MHz crystal with a frequency tolerance of ±10 ppm @ 25°C to meet the IEEE Std. 802.15.4 symbol rate tolerance of ±40 ppm.

A balun is formed by components: L11, L12, L13, C25, C27 and C31. L12 is also a pull-up for the RFP and RFN pins on the MRF24J40. C25 also acts as a DC block capacitor. RF switches, U1 and U2, switch between the power amplifier, U3, when transmitting and low noise amplifier, U2, when receiving. A band-pass filter FL1 is placed after the PA U3 to reduce harmonics. The remaining passive components provide bias and decoupling.

FIGURE 2-1: MRF24J40MC APPLICATION SCHEMATIC

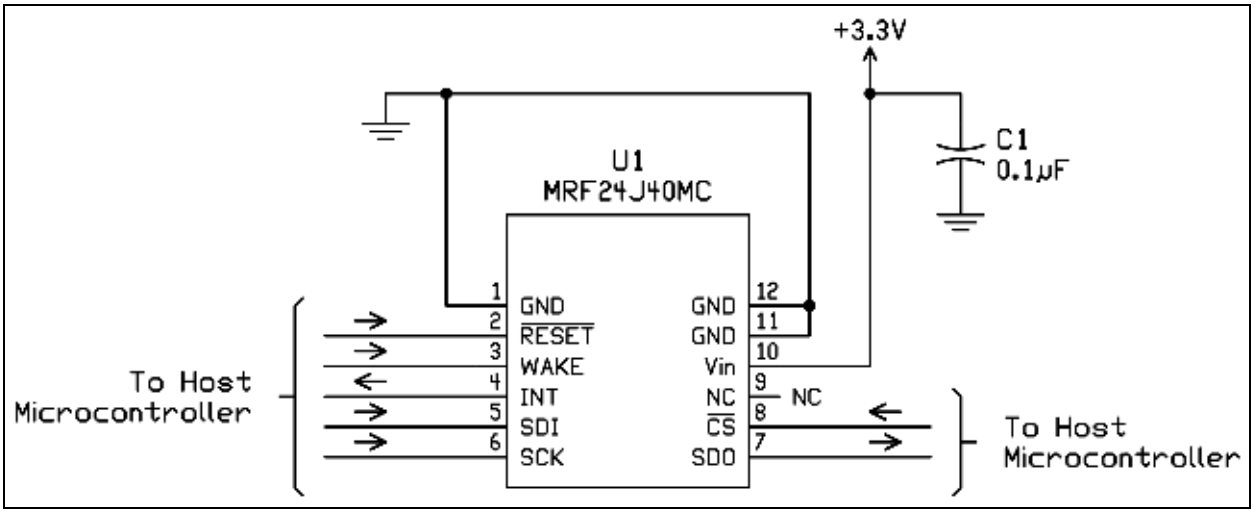

FIGURE 2-2: MRF24J40MC SCHEMATIC

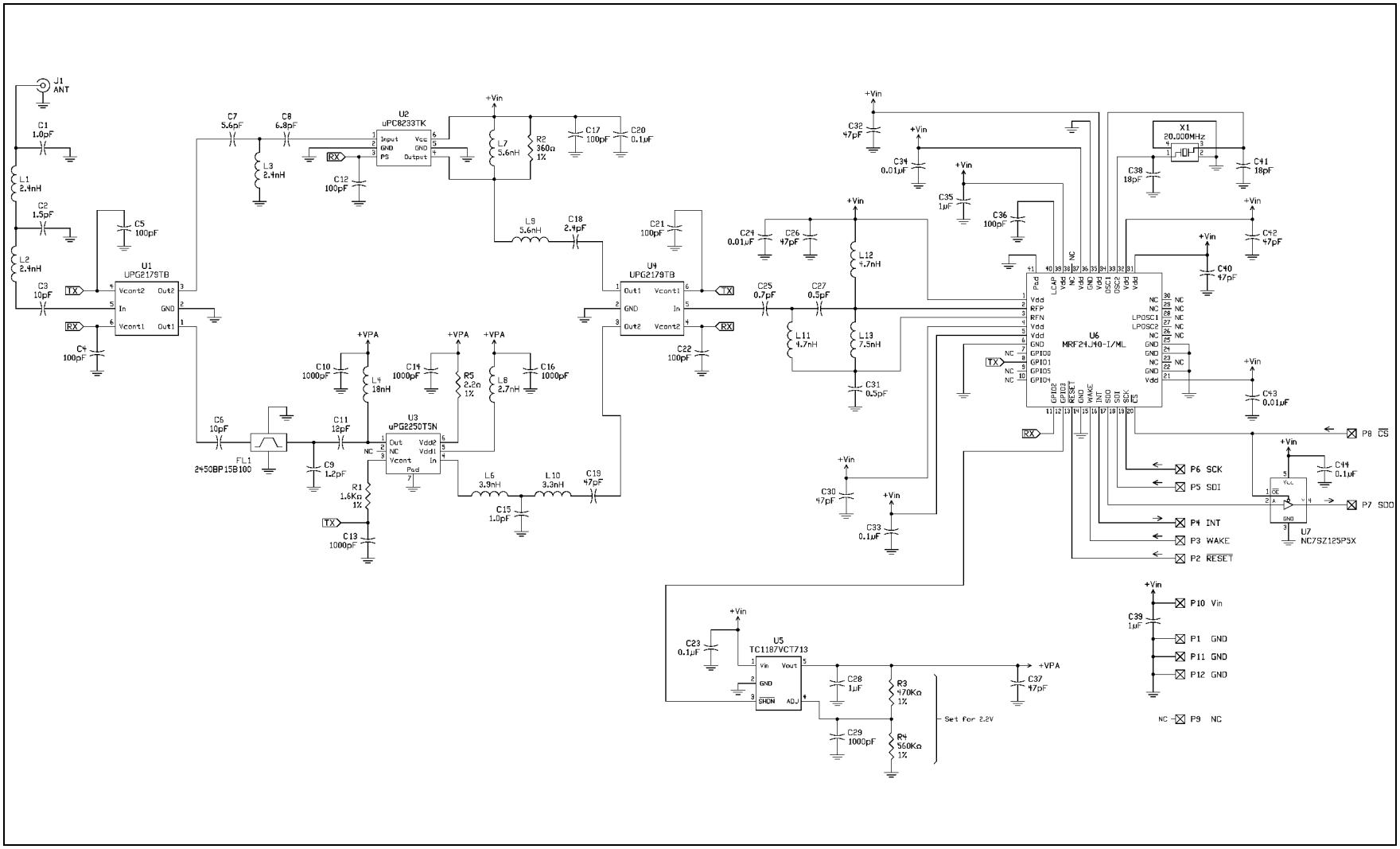

Preliminary

© 2019 Microchip Technology Inc.

TABLE 2-1: MRF24J40MC BILL OF MATERIALS

Designator	Value	Description	Manufacturer	Part Number	Comments
C27, C31	0.5 pF	Capacitor, Ceramic, 50V, ±0.1 pF, UHI Q NP0, SMT 0402	Johanson Technology	500R07S0R5BV4T	do not substitute
C25	0.7 pF	Capacitor, Ceramic, 50V, ±0.1 pF, UHI Q NP0, SMT 0402	Johanson Technology	500R07S0R7BV4T	do not substitute
C1, C15	1.0 pF	Capacitor, Ceramic, 50V, ±0.25 pF, HI-Q C0G, SMT 0402	Murata Electronics	GJM1555C1H1R0 CB01D	—
C9	1.2 pF	Capacitor, Ceramic, 50V, ±0.1 pF, UHI Q NP0, SMT 0402	Johanson Technology	500R07S1R2BV4T	do not substitute
C2	1.5 pF	Capacitor, Ceramic, 50V, ±0.25 pF, HI-Q C0G, SMT 0402	Murata Electronics	GJM1555C1H1R5 CB01D	—
C18	2.4 pF	Capacitor, Ceramic, 50V, ±-0.25 pF, HI-Q C0G, SMT 0402	Murata Electronics	GJM1555C1H2R4 CB01D	—
C7	5.6 pF	Capacitor, Ceramic, 50V, ±0.25 pF, HI-Q C0G, SMT 0402	Murata Electronics	GJM1555C1H5R6 CB01D	—
C8	6.8 pF	Capacitor, Ceramic, 50V, ±0.25 pF, HI-Q C0G, SMT 0402	Murata Electronics	GJM1555C1H6R8 CB01D	—
C3, C6	10 pF	Capacitor, Ceramic, 50V, ±5%, HI-Q C0G, SMT 0402	Murata Electronics	GJM1555C1H100-JB01D	—
C11	12 pF	Capacitor, Ceramic, 50V, ±5%, HI-Q C0G, SMT 0402	Murata Electronics	GJM1555C1H120-JB01D	—
C38, C41	18 pF	Capacitor, Ceramic, 50V, ±5%, C0G, SMT 0402	Murata Electronics	GRM1555C1H180-JZ01D	do not substitute
C19, C26, C30, C32, C37, C40, C42	47 pF	Capacitor, Ceramic, 50V, ±5%, C0G, SMT 0402	Murata Electronics	GRM1555C1H470-JZ01D	—
C4, C5, C12, C17, C21, C22, C36	100 pF	Capacitor, Ceramic, 50V, ±5%, C0G, SMT 0402	Murata Electronics	GRM1555C1H101-JZ01D	—
C10, C13, C14, C16, C29	1000 pF	Capacitor, Ceramic, 50V, ±10%, X7R, SMT 0402	Murata Electronics	GRM155R71H102-KA01D	—
C24, C34, C43	0.01 µF	Capacitor, Ceramic, 25V, ±10%, X7R, SMT 0402	Murata Electronics	GRM155R71E103-KA01D	—
C20, C23, C33, C44	0.1 µF	Capacitor, Ceramic, 10V, ±10%, X5R, SMT 0402	Murata Electronics	GRM155R61A104-KA01D	—
C28, C35, C39	1 µF	Capacitor, Ceramic, 6.3V, ±20%, X5R, SMT 0402	Murata Electronics	GRM155R60J105 ME19D	—
FL1	—	Filter, Bandpass, 2.4 GHz	Johanson Technology	2450BP15B100E	—
J1	—	Connector, Receptical, Ultra-mini coax SMD	Hirose Electric Co Ltd	U.FL-R-SMT(10)	—

TABLE 2-1: MRF24J40MC BILL OF MATERIALS (CONTINUED)

Designator	Value	Description	Manufacturer	Part Number	Comments
L1, L2, L3	2.4 nH	Inductor, Ceramic, ±0.3 nH, SMT 0402	Johanson Technology	L-07C2N4SV6T	do not substitute
L8	2.7 nH	Inductor, Ceramic, ±0.3 nH, SMT 0402	Johanson Technology	L-07C2N7SV6T	do not substitute
L10	3.3 nH	Inductor, Ceramic, ±0.3 nH, SMT 0402	Johanson Technology	L-07C3N3SV6T	do not substitute
L6	3.9 nH	Inductor, Ceramic, ±0.3 nH, SMT 0402	Johanson Technology	L-07C3N9SV6T	do not substitute
L11, L12	4.7 nH	Inductor, Ceramic, ±0.3 nH, SMT 0402	Johanson Technology	L-07C4N7SV6T	do not substitute
L7, L9	5.6 nH	Inductor, Ceramic, ±0.3 nH, SMT 0402	Johanson Technology	L-07C5N6SV6T	do not substitute
L13	7.5 nH	Inductor, Ceramic, ±5%, SMT 0402	Johanson Technology	L-07C7N5JV6T	do not substitute
L4	18 nH	Inductor, Ceramic, ±5%, SMT 0402	Johanson Technology	L-07C18NJV6T	do not substitute
R5	2.2 ohms	Resistor, 1%, ±100 ppm/C, SMT 0402	Vishay/Dale	CRCW04022R00FKED	—
R2	360 ohms	Resistor, 1%, ±100 ppm/C, SMT 0402	Panasonic – ECG	ERJ-2RKF3600X	—
R1	1.60 kohms	Resistor, 1%, ±100 ppm/C, SMT 0402	Panasonic – ECG	ERJ-2RKF1601X	—
R3	470 kohms	Resistor, 1%, ±100 ppm/C, SMT 0402	Yageo	RC0402FR-07470KL	—
R4	560 kohms	Resistor, 1%, ±100 ppm/C, SMT 0402	Panasonic – ECG	ERJ-2RKF5603X	—
U6	MRF24J40	Transceiver, 2.4 GHz, IEEE 802.15.4 QFN	Microchip Technology Inc.	MRF24J40-I/ML	—
U7	NC7SZ125P5X	Buffer, Tri-State, SC-70-5	Fairchild Semiconductor	NC7SZ125P5X	—
U5	TC1187VCT713	Regulator, LDO	Microchip Technology Inc.	TC1187VCT713	—
U1, U4	UPG2179TB	Switch, RF, SPDT, 6-SMINI	CEL/NEC	UPG2179TB-E4-A	—
U2	UPC8233TK	Amplifier, Low-noise, 6MINIMOLD	CEL/NEC	UPC8233TK-A	—
U3	UPG2250T5N	Amplifier, RF, 6-TSON	CEL/NEC	UPG2250T5N-E2-A	—
X1	20.000 MHz	Crystal, 20.000 MHz, 3.5 x 2.5 mm SMD	Abracon	ABM8-156-20.000 MHz	—

 © 2019 Microchip Technology Inc.

2.3 Printed Circuit Board

The MRF24J40MC module PCB is constructed with high temperature FR4 material, four layers and 0.032 " thick. The layers are illustrated in Figure 2-3 through Figure 2-8. The stack up of the PCB is illustrated in Figure 2-9.

FIGURE 2-3: TOP SILK SCREEN

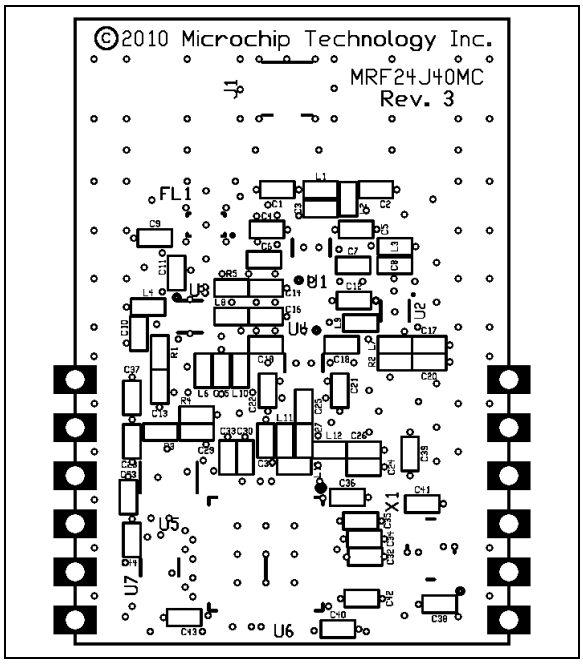

FIGURE 2-4: TOP COPPER

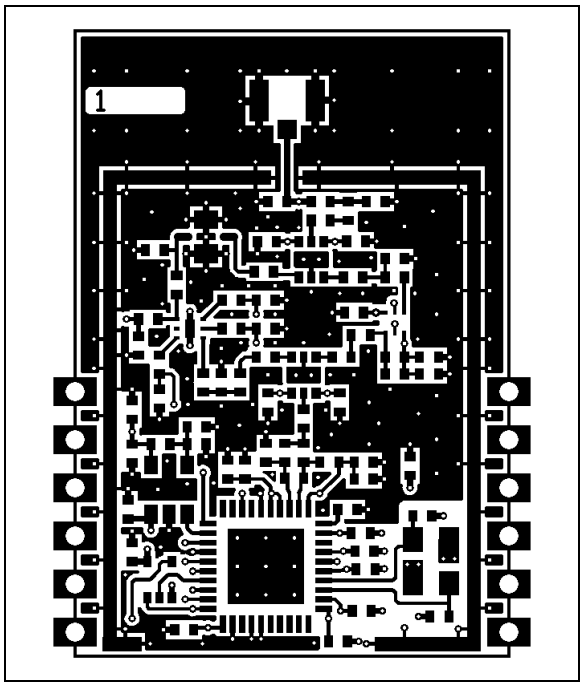

FIGURE 2-5: LAYER 2 – GROUND PLANE

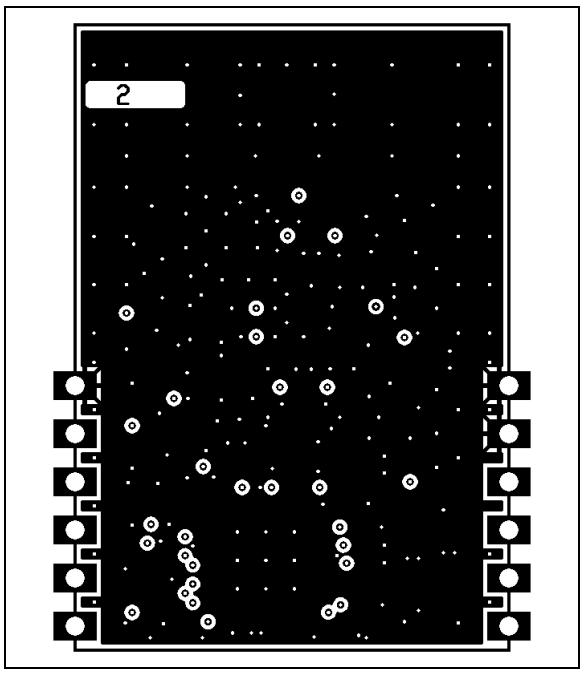

FIGURE 2-6: LAYER 3 – POWER PLANE

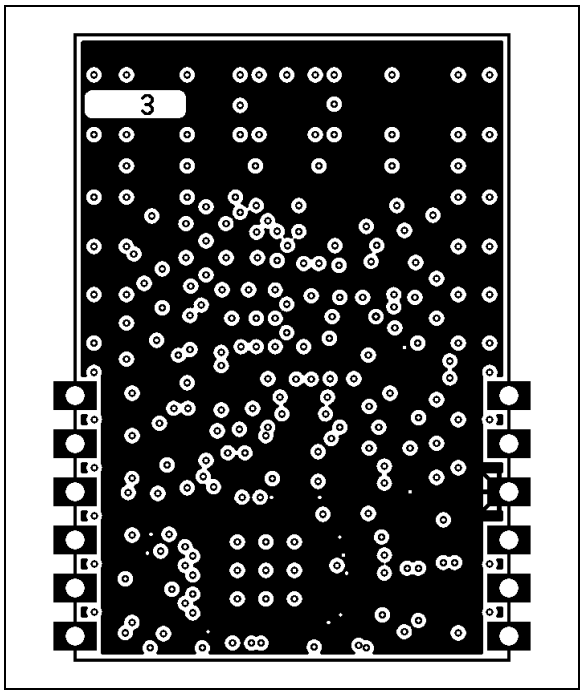

FIGURE 2-7: BOTTOM COPPER

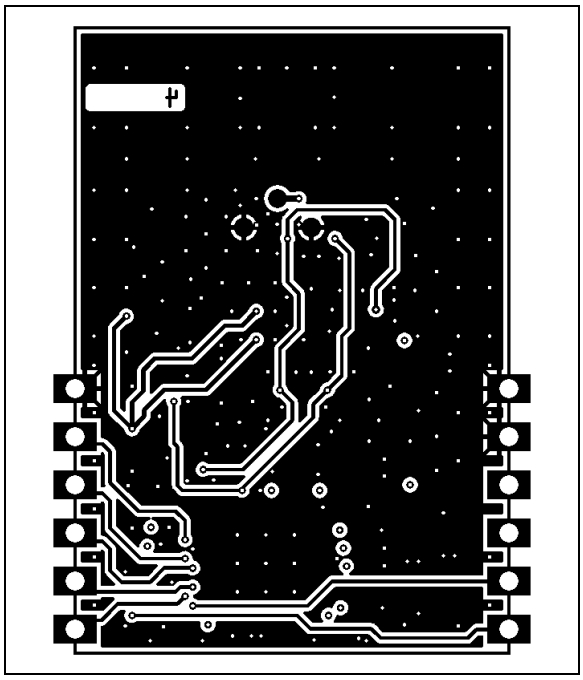

FIGURE 2-8: BOTTOM SILK SCREEN

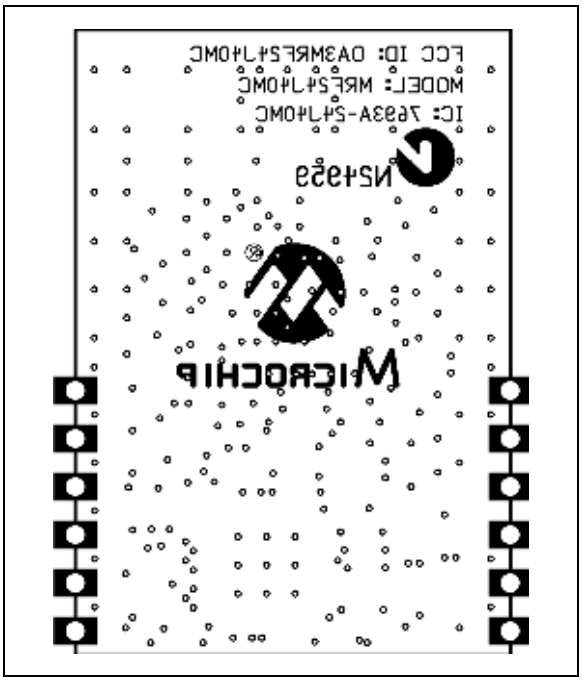

FIGURE 2-9: PCB LAYER STACK UP

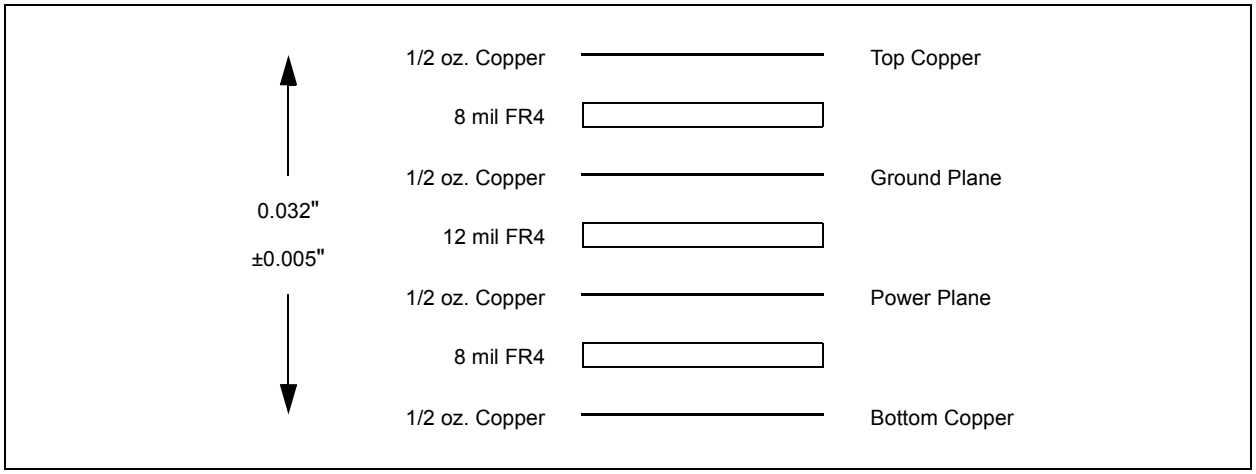

 © 2019 Microchip Technology Inc.

3.0 REGULATORY APPROVAL

The MRF24J40MC module has received regulatory approvals for modular devices in the United States and Canada. Modular approval allows the end user to place the MRF24J40MC module inside a finished product and not require regulatory testing for an intentional radiator (RF transmitter), provided no changes or modifications are made to the module circuitry. Changes or modifications could void the user's authority to operate the equipment. The end user must comply with all of the instructions provided by the Grantee, which indicate installation and/or operating conditions necessary for compliance.

The MRF24J40MC module has been tested and conforms to EN 300 328 V1.7.1 (2006-10), European Standards. The module tests can be applied toward final product certification and Declaration of Conformity (DoC). Additional testing may be required depending on the end application.

The integrator is still responsible for testing the end product for any additional compliance requirements required with this module installed (digital device emission, PC peripheral requirements, etc.) in the specific country that the end device will be marketed.

Annex F of the IEEE Std. 802.15.4 document has a good summary of regulatory requirements in various countries concerning IEEE Std. 802.15.4 devices. The standard can be downloaded from the IEEE Standards web page: http://standards.ieee.org/getieee802/802.15.html.

For more information on details on regulatory compliance, refer to the specific country radio regulations in the following sections.

3.1 United States

The MRF24J40MC has received Federal Communications Commission (FCC) CFR47 Telecommunications, Part 15 Subpart C "Intentional Radiators" 15.247 and modular approval in accordance with FCC Public Notice DA 00-1407 Released: June 26, 2000, Part 15 Unlicensed Modular Transmitter Approval. The MRF24J40MC module can be integrated into a finished product without obtaining subsequent and separate FCC certification.

The MRF24J40MC module has been labeled with its own FCC ID number, and if the FCC ID is not visible when the module is installed inside another device, then the outside of the finished product into which the module is installed must also display a label referring to the enclosed module. This exterior label can use wording as following:

> Contains Transmitter Module FCC ID: OA3MRF24J40MC
>
> -or-
>
> Contains FCC ID: OA3MRF24J40MC
>
> This device complies with Part 15 of the FCC Rules. Operation is subject to the following two conditions: (1) this device may not cause harmful interference, and (2) this device must accept any interference received, including interference that may cause undesired operation.

The user's manual should include the following statement:

> This equipment has been tested and found to comply with the limits for a Class B digital device, pursuant to part 15 of the FCC Rules. These limits are designed to provide reasonable protection against harmful interference in a residential installation. This equipment generates, uses and can radiate radio frequency energy, and if not installed and used in accordance with the instructions, may cause harmful interference to radio communications. However, there is no guarantee that interference will not occur in a particular installation. If this equipment does cause harmful interference to radio or television reception, which can be determined by turning the equipment OFF and ON, the user is encouraged to try to correct the interference by one or more of the following measures:
>
> - Reorient or relocate the receiving antenna.
> - Increase the separation between the equipment and receiver.
> - Connect the equipment into an outlet on a circuit different from that to which the receiver is connected.
> - Consult the dealer or an experienced radio/TV technician for help.

3.1.1 MRF24J40MC SETTINGS

To meet the FCC requirements, the following settings must be observed by the integrator:

- The MRF24J40MC transmit power setting shall not exceed 18.5 dBm (RFCON3 0x203<7:3> = 00101). Refer to **Section 1.3.4 "Transmit Power Settings"**.
- Only channels 11 through 25 may be selected (RFCON0 0x200).

3.1.2 APPROVED EXTERNAL ANTENNA TYPES

To maintain modular approval in the United States, only the antenna types that have been tested shall be used. It is permissible to use different antenna manufacturer provided the same antenna type, antenna gain (equal to or less than), and MRF24J40MC power setting is used for the same antenna type tested.

Testing of the MRF24J40MC module was performed with the antenna types listed in Table 3-1.

3.1.3 RF EXPOSURE

All transmitters regulated by FCC must comply with RF exposure requirements. OET Bulletin 65 "*Evaluating Compliance with FCC Guidelines for Human Exposure to Radio Frequency Electromagnetic Fields*" provides assistance in determining whether proposed or existing transmitting facilities, operations or devices comply with limits for human exposure to RF fields adopted by the Federal Communications Commission (FCC). The bulletin offers guidelines and suggestions for evaluating compliance.

If appropriate, compliance with exposure guidelines for mobile and unlicensed devices can be accomplished by the use of warning labels and by providing users with information concerning minimum separation distances from transmitting structures and proper installation of antennas.

The following statement must be included as a CAUTION statement in manuals and OEM products to alert users of FCC RF Exposure compliance:

> To satisfy FCC RF Exposure requirements for mobile and base station transmission devices, a separation distance of 20 cm or more should be maintained between the antenna of this device and persons during operation. To ensure compliance, operation at closer than this distance is not recommended.
>
> The antenna(s) used for this transmitter must not be co-located or operating in conjunction with any other antenna or transmitter.

If the MRF24J40MC module is used in a portable application (antenna is less than 20 cm from persons during operation), the integrator is responsible for performing Specific Absorption Rate (SAR) testing in accordance with FCC rules 2.1091.

3.1.4 HELPFUL WEB SITES

Federal Communications Commission (FCC) http://www.fcc.gov

TABLE 3-1: APPROVED EXTERNAL ANTENNA TYPES

Type	Manufacture	Part Number	Gain	Output Power(1)
Whip, Dipole	Aristotle Enterprises Inc.	RFA-02-5-F7H1-70B-150	5 dBi	18.5 dBm

Note 1: Typical output power at antenna connector J1, Channel 11, 50Ω impedance.

© 2019 Microchip Technology Inc.

3.2 Canada

The MRF24J40MC module has been certified for use in Canada under Industry Canada (IC) Radio Standards Specification (RSS) RSS-210 and RSS-Gen. Modular approval permits the installation of a module in a host device without the need to recertify the device.

Labeling Requirements for the Host Device (from Section 3.2.1, RSS-Gen, Issue 3, December 2010):

The host device shall be properly labeled to identify the module within the host device.

The Industry Canada certification label of a module shall be clearly visible at all times when installed in the host device, otherwise the host device must be labeled to display the Industry Canada certification number of the module, preceded by the words “Contains transmitter module”, or the word “Contains”, or similar wording expressing the same meaning, as follows:

Contains transmitter module IC: 7693A-24J40MC

User Manual Notice for License-Exempt Radio Apparatus (from Section 7.1.3 RSS-Gen, Issue 3, December 2010):

User manuals for license-exempt radio apparatus shall contain the following or equivalent notice in a conspicuous location in the user manual or alternatively on the device or both.

This device complies with Industry Canada license-exempt RSS standard(s). Operation is subject to the following two conditions: (1) this device may not cause interference, and (2) this device must accept any interference, including interference that may cause undesired operation of the device. Le présent appareil est conforme aux CNR d'Industrie Canada applicables aux appareils radio exempts de licence. L'exploitation est autorisée aux deux conditions suivantes: (1) l'appareil ne doit pas produire de brouillage, et (2) l'utilisateur de l'appareil doit accepter tout brouillage radioélectrique subi, même si le brouillage est susceptible d'en compromettre le fonctionnement.

3.2.1 MRF24J40MC SETTINGS

To meet Industry Canada (IC) requirements, the following settings must be observed by the integrator:

- The MRF24J40MC transmit power setting shall not exceed 18.5 dBm (RFCON3 0x203<7:3> = `00101`). Refer to **Section 1.3.4 “Transmit Power Settings”**.
- Only channels 11 through 25 may be selected (RFCON0 0x200).

3.2.2 APPROVED EXTERNAL ANTENNA TYPES

Transmitter Antenna (from Section 7.1.2 RSS-Gen, Issue 3, December 2010):

The MRF24J40MC module can only be sold or operated with antennas with which it was approved. Transmitter may be approved with multiple antenna types. An antenna type comprises antennas having similar in-band and out-of-band radiation patterns. Testing shall be performed using the highest gain antenna of each combination of transmitter and antenna type for which approval is being sought, with the transmitter output power set at the maximum level. Any antenna of the same type having equal or lesser gain as an antenna that had been successfully tested with the transmitter, will also be considered approved with the transmitter, and may be used and marketed with the transmitter.

When a measurement at the antenna connector is used to determine RF output power, the effective gain of the device's antenna shall be stated, based on measurement or on data from the antenna manufacturer. For transmitters of output power greater than 10 milliwatts, the total antenna gain shall be added to the measured RF output power to demonstrate compliance to the specified radiated power limits. User manuals for transmitters shall display the following notice in a conspicuous location:

Under Industry Canada regulations, this radio transmitter may only operate using an antenna of a type and maximum (or lesser) gain approved for the transmitter by Industry Canada. To reduce potential radio interference to other users, the antenna type and its gain should be so chosen that the equivalent isotropically radiated power (e.i.r.p.) is not more than that necessary for successful communication. Conformément à la réglementation d'Industrie Canada, le présent émetteur radio peut fonctionner avec une antenne d'un type et d'un gain maximal (ou inférieur) approuvé pour l'émetteur par Industrie Canada. Dans le but de réduire les risques de brouillage radioélectrique à l'intention des autres utilisateurs, il faut choisir le type d'antenne et son gain de sorte que la puissance isotrope rayonnée équivalente (p.i.r.e.) ne dépasse pas l'intensité nécessaire à l'établissement d'une communication satisfaisante.

The above notice may be affixed to the device instead of displayed in the user manual.

User manuals for transmitters equipped with detachable antennas shall also contain the following notice in a conspicuous location.

This radio transmitter (identify the device by certification number, or model number if Category II) has been approved by Industry Canada to operate with the antenna types listed below with the maximum permissible gain and required antenna impedance for each antenna type indicated. Antenna types not included in this list, having a gain greater than the maximum gain indicated for that type, are strictly prohibited for use with this device.

Conformément à la réglementation d'Industrie Canada, le présent émetteur radio peut fonctionner avec une antenne d'un type et d'un gain maximal (ou inférieur) approuvé pour l'émetteur par Industrie Canada. Dans le but de réduire les risques de brouillage radioélectrique à l'intention des autres utilisateurs, il faut choisir le type d'antenne et son gain de sorte que la puissance isotrope rayonnée équivalente (p.i.r.e.) ne dépasse pas l'intensité nécessaire à l'établissement d'une communication satisfaisante.

Immediately following the above notice, the manufacturer shall provide a list of all antenna types approved for use with the transmitter, indicating the maximum permissible antenna gain (in dBi) and required impedance for each.

Approved external antenna types for the MRF24J40MC module are listed in Table 3-2.

3.2.3 HELPFUL WEB SITES

Industry Canada: http://www.ic.gc.ca/

TABLE 3-2: APPROVED EXTERNAL ANTENNA TYPES

Type	Manufacture	Part Number	Gain	Output Power(1)	E.I.R.P.
Whip, Dipole	Aristotle Enterprises Inc.	RFA-02-5-F7H1-70B-150	5 dBi	18.5 dBm	23.5 dBm

Note 1: Typical output power at antenna connector J1, Channel 11, 50Ω impedance

 © 2019 Microchip Technology Inc.

3.3 Europe

The MRF24J40MC module conforms to the emission standards summarized in Table 3-3. The module tests can be applied toward product certification and Declaration of Conformity (DoC).

Note: To maintain conformance tested ETSI standards, the module shall not be modified and settings in **Section 1.3 "Operation"** must be observed.

The European Standards do not provide a modular approval similar to the USA (FCC) and Canada (IC). However, the completed compliance testing can be used as part of the customer's application for product compliance approvals. The module test report data can be used as part of the customer's product test plan and can significantly lower customer's compliance burden.

Depending on the end application, additional testing may be required. The integrator is responsible for testing the end product for any additional compliance requirements that become necessary with this module installed (for example, digital device emission, PC peripheral requirements and so on) in the specific country where end device is marketed).

3.3.1 MRF24J40MC SETTINGS

To meet ETSI requirements, the following settings must be observed by the integrator:

- The MRF24J40MC transmit power setting shall not exceed 18.5 dBm peak (RFCON3 0x203<7:3> = 00101) which for ETSI 300 328 requirements equates to 9.8 dBm average (20 percent duty cycle). When the MRF24J40MC module is connected to a 2 dBi antenna, the EIRP is less than 20 dBm. Refer to **Section 1.3.4 "Transmit Power Settings"**.

Only channels 11 through 25 may be selected (RFCON0 0x200).

3.3.2 EXTERNAL ANTENNA REQUIREMENTS

The maximum gain external antenna should not exceed 3 dBi to satisfy ETSI EN 300 328 v1.7.1 (2006-10), Maximum e.i.r.p. spectral density limit, Section 4.3.2.2, "For wideband modulations other then FHSS (DSSS, OFDM, etc.), the maximum e.i.r.p. spectral density is limited to 10 mW per MHz."

3.3.3 HELPFUL WEB SITES

A document that can be used as a starting point in understanding the use of Short Range Devices (SRD) in Europe is the European Radio Communications Committee (ERC) Recommendation 70-03 E, which can be downloaded from the European Radio Communications Office (ERO):http://www.ero.dk/.

The other helpful websites are:

Radio and Telecommunications Terminal Equipment (R&TTE):

http://ec.europa.eu/enterprise/rtte/index_en.htm

European Conference of Postal and Telecommunications Administrations (CEPT):

http://www.cept.org

European Telecommunications Standards Institute (ETSI):

http://www.etsi.org

European Radio Communications Office (ERO): http://www.ero.dk

TABLE 3-3: EMISSIONS STANDARDS TESTED

Specification			Test Method
Emission Standards			
EN 300 328 V1.7.1 (2006-10)	4.3.1	Maximum Transmit Power	5.7.2
EN 300 328 V1.7.1 (2006-10)	4.3.2	Maximum EIRP Spectral Density	5.7.3
EN 300 328 V1.7.1 (2006-10)	4.3.3	Frequency Range	5.7.4
EN 300 328 V1.7.1 (2006-10)	4.3.6	Transmitter Spurious Emissions	5.7.5
EN 300 328 V1.7.1 (2006-10)	4.3.7	Receiver Spurious Emissions	5.7.6

3.4 Australia/New Zealand

The MRF24J40MC module conforms to compliance levels 1, 2 and 3 in Australia and levels of conformity 1, 2 and 3 in New Zealand as required by notices under:

- Section 182 of the Australian Radiocommunications Act 1992;
- Section 407 of the Australian Telecommunications Act 1997; and
- Section 134 of the New Zealand Radiocommunications Act 1989.

3.4.1 MRF24J40MC SETTINGS

To meet ETSI requirements, the following settings must be observed by the integrator:

- The MRF24J40MC transmit power setting shall not exceed 18.5 dBm peak (RFCON3 0x203<7:3> = 00101) which for ETSI 300 328 requirements equates to 9.8 dBm average (20 percent duty cycle). When the MRF24J40MC module is connected to a 2 dBi antenna, the EIRP is less than 20 dBm. Refer to **Section 1.3.4 "Transmit Power Settings"**.
- Only channels 11 through 25 may be selected (RFCON0 0x200).

3.4.2 EXTERNAL ANTENNA REQUIREMENTS

The maximum gain external antenna should not exceed 3 dBi to satisfy ETSI EN 300 328 v1.7.1 (2006-10), Maximum e.i.r.p. spectral density limit, Section 4.3.2.2, "For wideband modulations other then FHSS (DSSS, OFDM, etc.), the maximum e.i.r.p. spectral density is limited to 10 mW per MHz."

3.4.3 HELPFUL WEBSITES

Australian Communications and Media Authority – Radiocommunications (Short Range Devices) Standard:
http://www.acma.gov.au/WEB/STANDARD/pc=PC_100141

 © 2019 Microchip Technology Inc.

4.0 ELECTRICAL CHARACTERISTICS

TABLE 4-1: RECOMMENDED OPERATING CONDITIONS

Parameters	Min	Typ	Max	Units
Ambient Operating Temperature	–40	—	+85	°C
Supply Voltage for RF, Analog and Digital Circuits	3.0	—	3.6	V
Supply Voltage for Digital I/O	3.0	3.3	3.6	V
Input High Voltage (V_{IH})	0.5 x V_{DD}	—	V_{DD} + 0.3	V
Input Low Voltage (V_{IL})	–0.3	—	0.2 x V_{DD}	V

TABLE 4-2: CURRENT CONSUMPTION

(T_A = 25°C, V_{DD} = 3.3V)

Chip Mode	Condition	Min	Typ	Max	Units
Sleep	Sleep Clock and PA voltage regulator Disabled	—	12 μA	—	μA
Tx	At Maximum Output Power	—	120 mA	—	mA
Rx	—	—	25 mA	—	mA

TABLE 4-3: RECEIVER AC CHARACTERISTICS

Typical values are at T_A = 25°C, V_{DD} = 3.3V, LO Frequency = 2.445 GHz

Parameters	Condition	Min	Typ	Max	Units
RF Input Frequency	Compatible to IEEE Std. 802.15.4™, 2003	2.405	—	2.480	GHz
RF Sensitivity	—	—	–108	—	dBm
Maximum RF Input	50Ω	—	—	–23	dBm
LO Leakage	Measured at Balun Matching Network Input at Frequency, 2.405 GHz – 2.48 GHz	—	–60	—	dBm
Input Return Loss	50Ω	–8	–12	—	dB
Noise Figure (including matching)	—	—	1.8	—	dB
Adjacent Channel Rejection	@ ±5 MHz	30	—	—	dB
Alternate Channel Rejection	@ ±10 MHz	40	—	—	dB
RSSI Range	—	—	50	—	dB
RSSI Error	—	–5	—	5	dB

TABLE 4-4: TRANSMITTER AC CHARACTERISTICS

Typical values are at T_A = 25°C, V_{DD} = 3.3V, LO Frequency = 2.445 GHz

Parameters	Condition	Min	Typ	Max	Units
RF Carrier Frequency	—	2.405	—	2.475	GHz
Maximum RF Output Power	50Ω	—	19(1)	—	dBm
RF Output Power Control Range	—	—	45	—	dB
Tx Gain Control Resolution	Programmed by Register	—	1.25	—	dB
Carrier Suppression	—	—	–30	—	dBc
Tx Spectrum Mask for O-QPSK Signal	Offset Frequency >3.5 MHz, at 0 dBm Output Power	–33	—	—	dBm
Tx EVM	—	—	15	—	%

Note 1: Output power at antenna connector J1.

 © 2019 Microchip Technology Inc.

APPENDIX A: REVISION HISTORY

Revision A (March 2011)

This is the initial release of the document.

Revision B (August 2019)

- Minimum operating voltage of the device is revised to 3.0V.
- Updated Microchip template and DS number to 70005002.

NOTES:

 © 2019 Microchip Technology Inc.

THE MICROCHIP WEBSITE

Microchip provides online support via our WWW site at www.microchip.com. This website is used as a means to make files and information easily available to customers. Accessible by using your favorite Internet browser, the website contains the following information:

- **Product Support** – Data sheets and errata, application notes and sample programs, design resources, user's guides and hardware support documents, latest software releases and archived software
- **General Technical Support** – Frequently Asked Questions (FAQ), technical support requests, online discussion groups, Microchip consultant program member listing
- **Business of Microchip** – Product selector and ordering guides, latest Microchip press releases, listing of seminars and events, listings of Microchip sales offices, distributors and factory representatives

CUSTOMER CHANGE NOTIFICATION SERVICE

Microchip's customer notification service helps keep customers current on Microchip products. Subscribers will receive e-mail notification whenever there are changes, updates, revisions or errata related to a specified product family or development tool of interest.

To register, access the Microchip website at www.microchip.com. Under "Support", click on "Customer Change Notification" and follow the registration instructions.

CUSTOMER SUPPORT

Users of Microchip products can receive assistance through several channels:

- Distributor or Representative
- Local Sales Office
- Field Application Engineer (FAE)
- Technical Support

Customers should contact their distributor, representative or Field Application Engineer (FAE) for support. Local sales offices are also available to help customers. A listing of sales offices and locations is included in the back of this document.

Technical support is available through the website at: http://microchip.com/support

NOTES:

© 2019 Microchip Technology Inc.

PRODUCT IDENTIFICATION SYSTEM

To order or obtain information, for example, on pricing or delivery, refer to the factory or the listed sales office.

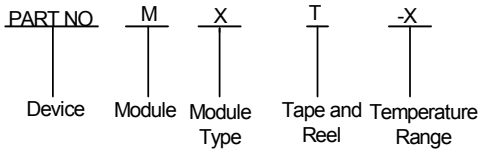

Device	MRF24J40MC: 2.4 GHz IEEE Std. 802.15.4 RF Transceiver Module with PA/LNA and External Antenna Connector
Temperature Range	I = -40ºC to +85ºC (Industrial)

Example:

a) MRF24J40MC-I/RM: Industrial temperature, tray.

b) MRF24J40MCT-I/RM: Industrial temperature, tape and reel.

Worldwide Sales and Service

AMERICAS

Corporate Office
2355 West Chandler Blvd.
Chandler, AZ 85224-6199
Tel: 480-792-7200
Fax: 480-792-7277
Technical Support:
http://www.microchip.com/support
Web Address:
www.microchip.com

Atlanta
Duluth, GA
Tel: 678-957-9614
Fax: 678-957-1455

Austin, TX
Tel: 512-257-3370

Boston
Westborough, MA
Tel: 774-760-0087
Fax: 774-760-0088

Chicago
Itasca, IL
Tel: 630-285-0071
Fax: 630-285-0075

Dallas
Addison, TX
Tel: 972-818-7423
Fax: 972-818-2924

Detroit
Novi, MI
Tel: 248-848-4000

Houston, TX
Tel: 281-894-5983

Indianapolis
Noblesville, IN
Tel: 317-773-8323
Fax: 317-773-5453
Tel: 317-536-2380

Los Angeles
Mission Viejo, CA
Tel: 949-462-9523
Fax: 949-462-9608
Tel: 951-273-7800

Raleigh, NC
Tel: 919-844-7510

New York, NY
Tel: 631-435-6000

San Jose, CA
Tel: 408-735-9110
Tel: 408-436-4270

Canada - Toronto
Tel: 905-695-1980
Fax: 905-695-2078

ASIA/PACIFIC

Australia - Sydney
Tel: 61-2-9868-6733

China - Beijing
Tel: 86-10-8569-7000

China - Chengdu
Tel: 86-28-8665-5511

China - Chongqing
Tel: 86-23-8980-9588

China - Dongguan
Tel: 86-769-8702-9880

China - Guangzhou
Tel: 86-20-8755-8029

China - Hangzhou
Tel: 86-571-8792-8115

China - Hong Kong SAR
Tel: 852-2943-5100

China - Nanjing
Tel: 86-25-8473-2460

China - Qingdao
Tel: 86-532-8502-7355

China - Shanghai
Tel: 86-21-3326-8000

China - Shenyang
Tel: 86-24-2334-2829

China - Shenzhen
Tel: 86-755-8864-2200

China - Suzhou
Tel: 86-186-6233-1526

China - Wuhan
Tel: 86-27-5980-5300

China - Xian
Tel: 86-29-8833-7252

China - Xiamen
Tel: 86-592-2388138

China - Zhuhai
Tel: 86-756-3210040

ASIA/PACIFIC

India - Bangalore
Tel: 91-80-3090-4444

India - New Delhi
Tel: 91-11-4160-8631

India - Pune
Tel: 91-20-4121-0141

Japan - Osaka
Tel: 81-6-6152-7160

Japan - Tokyo
Tel: 81-3-6880- 3770

Korea - Daegu
Tel: 82-53-744-4301

Korea - Seoul
Tel: 82-2-554-7200

Malaysia - Kuala Lumpur
Tel: 60-3-7651-7906

Malaysia - Penang
Tel: 60-4-227-8870

Philippines - Manila
Tel: 63-2-634-9065

Singapore
Tel: 65-6334-8870

Taiwan - Hsin Chu
Tel: 886-3-577-8366

Taiwan - Kaohsiung
Tel: 886-7-213-7830

Taiwan - Taipei
Tel: 886-2-2508-8600

Thailand - Bangkok
Tel: 66-2-694-1351

Vietnam - Ho Chi Minh
Tel: 84-28-5448-2100

EUROPE

Austria - Wels
Tel: 43-7242-2244-39
Fax: 43-7242-2244-393

Denmark - Copenhagen
Tel: 45-4450-2828
Fax: 45-4485-2829

Finland - Espoo
Tel: 358-9-4520-820

France - Paris
Tel: 33-1-69-53-63-20
Fax: 33-1-69-30-90-79

Germany - Garching
Tel: 49-8931-9700

Germany - Haan
Tel: 49-2129-3766400

Germany - Heilbronn
Tel: 49-7131-72400

Germany - Karlsruhe
Tel: 49-721-625370

Germany - Munich
Tel: 49-89-627-144-0
Fax: 49-89-627-144-44

Germany - Rosenheim
Tel: 49-8031-354-560

Israel - Ra'anana
Tel: 972-9-744-7705

Italy - Milan
Tel: 39-0331-742611
Fax: 39-0331-466781

Italy - Padova
Tel: 39-049-7625286

Netherlands - Drunen
Tel: 31-416-690399
Fax: 31-416-690340

Norway - Trondheim
Tel: 47-7288-4388

Poland - Warsaw
Tel: 48-22-3325737

Romania - Bucharest
Tel: 40-21-407-87-50

Spain - Madrid
Tel: 34-91-708-08-90
Fax: 34-91-708-08-91

Sweden - Gothenberg
Tel: 46-31-704-60-40

Sweden - Stockholm
Tel: 46-8-5090-4654

UK - Wokingham
Tel: 44-118-921-5800
Fax: 44-118-921-5820

© 2019 Microchip Technology Inc.