NXP Semiconductors
Technical Data

Document Number: MRFE6VS25N
Rev. 2, 03/2019

RF Power LDMOS Transistors

High Ruggedness N-Channel Enhancement-Mode Lateral MOSFETs

RF power transistors designed for both narrowband and broadband ISM, broadcast and aerospace applications operating at frequencies from 1.8 to 2000 MHz. These devices are fabricated using NXP's enhanced ruggedness platform and are suitable for use in applications where high VSWRs are encountered.

Typical Performance: V_{DD} = 50 Volts

Frequency (MHz)	Signal Type	P_{out} (W)	G_{ps} (dB)	η_D (%)	IMD (1) (dBc)
1.8 to 30 (2,6)	Two-Tone (10 kHz spacing)	25 PEP	25	51	-30
30-512 (3,6)	Two-Tone (200 kHz spacing)	25 PEP	17.1	30.1	-32
512 (4)	Pulse (100 μsec, 20% Duty Cycle)	25 Peak	25.4	74.5	—
512 (4)	CW	25	25.5	74.7	—
1030 (5)	CW	25	22.5	60	—

Load Mismatch/Ruggedness

Frequency (MHz)	Signal Type	VSWR	P_{in} (W)	Test Voltage	Result
30 (2)	CW	>65:1 at all Phase Angles	0.23 (3 dB Overdrive)	50	No Device Degradation
512 (3)	CW		1.6 (3 dB Overdrive)		
512 (4)	Pulse (100 μsec, 20% Duty Cycle)		0.14 Peak (3 dB Overdrive)		
512 (4)	CW		0.14 (3 dB Overdrive		
1030 (5)	CW		0.34 (3 dB Overdrive		

1. Distortion products are referenced to one of two tones. See p. 13, 20.
2. Measured in 1.8-30 MHz broadband reference circuit.
3. Measured in 30-512 MHz broadband reference circuit.
4. Measured in 512 MHz narrowband test circuit.
5. Measured in 1030 MHz narrowband test circuit.
6. The values shown are the minimum measured performance numbers across the indicated frequency range.

Features

- Wide operating frequency range
- Extreme ruggedness
- Unmatched, capable of very broadband operation
- Integrated stability enhancements
- Low thermal resistance
- Extended ESD protection circuit

MRFE6VS25NR1
MRFE6VS25GNR1

1.8-2000 MHz, 25 W, 50 V
WIDEBAND
RF POWER LDMOS TRANSISTORS

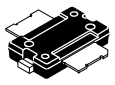

TO-270-2
PLASTIC
MRFE6VS25NR1

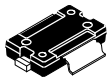

TO-270G-2
PLASTIC
MRFE6VS25GNR1

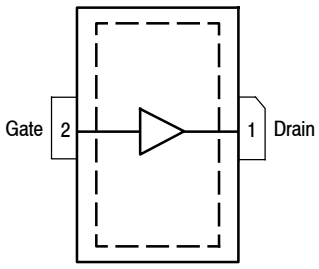

(Top View)

Note: The backside of the package is the source terminal for the transistor.

Figure 1. Pin Connections

© 2012, 2019 NXP B.V.

Table 1. Maximum Ratings

Rating	Symbol	Value	Unit
Drain-Source Voltage	V_{DSS}	-0.5, +133	Vdc
Gate-Source Voltage	V_{GS}	-6.0, +10	Vdc
Storage Temperature Range	T_{stg}	-65 to +150	°C
Case Operating Temperature	T_C	-40 to +150	°C
Operating Junction Temperature (1,2)	T_J	-40 to +225	°C

Table 2. Thermal Characteristics

Characteristic	Symbol	Value (2,3)	Unit
Thermal Resistance, Junction to Case CW: Case Temperature 80°C, 25 W CW, 50 Vdc, I_{DQ} = 10 mA, 512 MHz	$R_{\theta JC}$	1.2	°C/W
Thermal Impedance, Junction to Case Pulse: Case Temperature 77°C, 25 W Peak, 100 μsec Pulse Width, 20% Duty Cycle, 50 Vdc, I_{DQ} = 10 mA, 512 MHz	$Z_{\theta JC}$	0.29	°C/W

Table 3. ESD Protection Characteristics

Test Methodology	Class
Human Body Model (per JESD22-A114)	2, passes 2500 V
Machine Model (per EIA/JESD22-A115)	B, passes 250 V
Charge Device Model (per JESD22-C101)	IV, passes 2000 V

Table 4. Moisture Sensitivity Level

Test Methodology	Rating	Package Peak Temperature	Unit
Per JESD22-A113, IPC/JEDEC J-STD-020	3	260	°C

Table 5. Electrical Characteristics (T_A = 25°C unless otherwise noted)

Characteristic	Symbol	Min	Typ	Max	Unit
Off Characteristics					
Gate-Source Leakage Current (V_{GS} = 5 Vdc, V_{DS} = 0 Vdc)	I_{GSS}	—	—	400	nAdc
Drain-Source Breakdown Voltage (V_{GS} = 0 Vdc, I_D = 50 mA)	$V_{(BR)DSS}$	133	142	—	Vdc
Zero Gate Voltage Drain Leakage Current (V_{DS} = 50 Vdc, V_{GS} = 0 Vdc)	I_{DSS}	—	—	2	μAdc
Zero Gate Voltage Drain Leakage Current (V_{DS} = 100 Vdc, V_{GS} = 0 Vdc)	I_{DSS}	—	—	7	μAdc
On Characteristics					
Gate Threshold Voltage (V_{DS} = 10 Vdc, I_D = 85 μAdc)	$V_{GS(th)}$	1.5	2.0	2.5	Vdc
Gate Quiescent Voltage (V_{DD} = 50 Vdc, I_D = 10 mAdc, Measured in Functional Test)	$V_{GS(Q)}$	2.0	2.4	3.0	Vdc
Drain-Source On-Voltage (V_{GS} = 10 Vdc, I_D = 210 mAdc)	$V_{DS(on)}$	—	0.28	—	Vdc
Dynamic Characteristics					
Reverse Transfer Capacitance (V_{DS} = 50 Vdc ± 30 mV(rms)ac @ 1 MHz, V_{GS} = 0 Vdc)	C_{rss}	—	0.26	—	pF
Output Capacitance (V_{DS} = 50 Vdc ± 30 mV(rms)ac @ 1 MHz, V_{GS} = 0 Vdc)	C_{oss}	—	14.2	—	pF
Input Capacitance (V_{DS} = 50 Vdc, V_{GS} = 0 Vdc ± 30 mV(rms)ac @ 1 MHz)	C_{iss}	—	39.2	—	pF

1. Continuous use at maximum temperature will affect MTTF.
2. MTTF calculator available at http://www.nxp.com/RF/calculators.
3. Refer to AN1955, *Thermal Measurement Methodology of RF Power Amplifiers.* Go to http://www.nxp.com/RF and search for AN1955.

(continued)

Table 5. Electrical Characteristics (T_A = 25°C unless otherwise noted) **(continued)**

Characteristic	Symbol	Min	Typ	Max	Unit
Functional Tests (1) (In NXP Test Fixture, 50 ohm system) V_{DD} = 50 Vdc, I_{DQ} = 10 mA, P_{out} = 25 W Peak (5 W Avg.), f = 512 MHz, 100 μsec Pulse Width, 20% Duty Cycle					
Power Gain	G_{ps}	24.0	25.4	27.0	dB
Drain Efficiency	η_D	70.0	74.5	—	%
Input Return Loss	IRL	—	-16	-10	dB

Load Mismatch/Ruggedness (In NXP Test Fixture, 50 ohm system) I_{DQ} = 10 mA

Frequency (MHz)	Signal Type	VSWR	P_{in} (W)	Test Voltage, V_{DD}	Result
512	Pulse (100 μsec, 20% Duty Cycle)	>65:1 at all Phase Angles	0.14 Peak (3 dB Overdrive)	50	No Device Degradation
	CW		0.14 (3 dB Overdrive)		

Table 6. Ordering Information

Device	Shipping Information	Package
MRFE6VS25NR1	R1 Suffix = 500 Units, 24 mm Tape Width, 13-Inch Reel	TO-270-2
MRFE6VS25GNR1		TO-270G-2

1. Measurements made with device in straight lead configuration before any lead forming operation is applied. Lead forming is used for gull wing (GN) parts.

TYPICAL CHARACTERISTICS

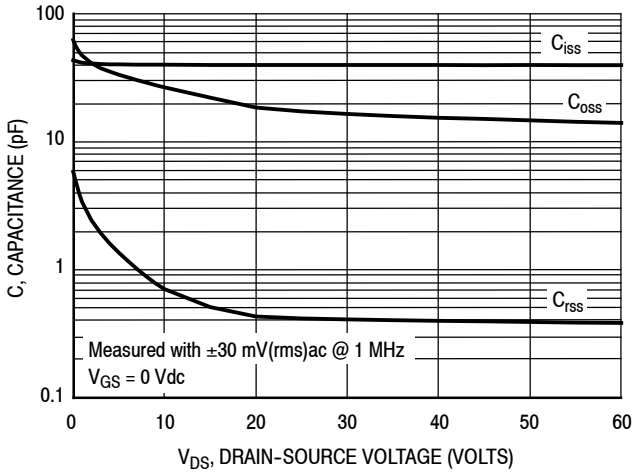

Figure 2. Capacitance versus Drain-Source Voltage

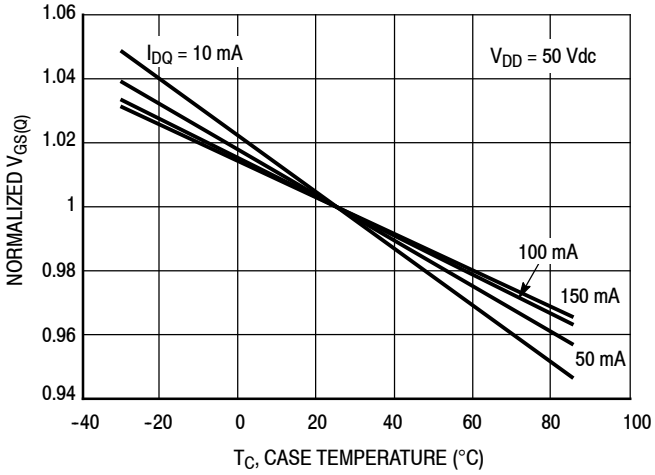

Figure 3. Normalized V_{GS} and Quiescent Current versus Case Temperature

I_{DQ} (mA)	Slope (mV/°C)
10	-2.160
50	-1.790
100	-1.760
150	-1.680

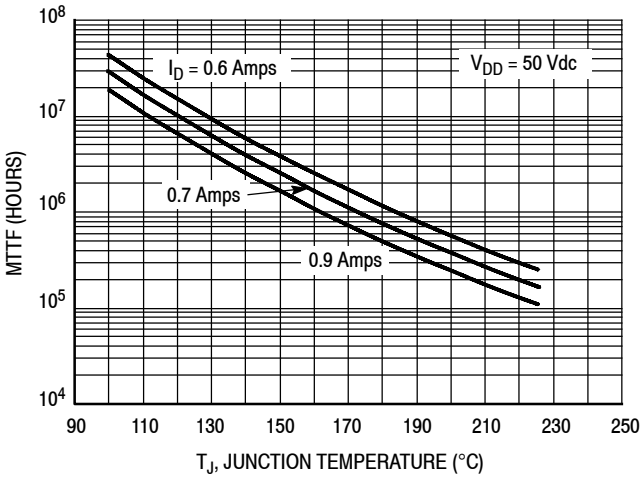

Note: MTTF value represents the total cumulative operating time under indicated test conditions.

Figure 4. MTTF versus Junction Temperature — CW

512 MHz NARROWBAND PRODUCTION TEST FIXTURE

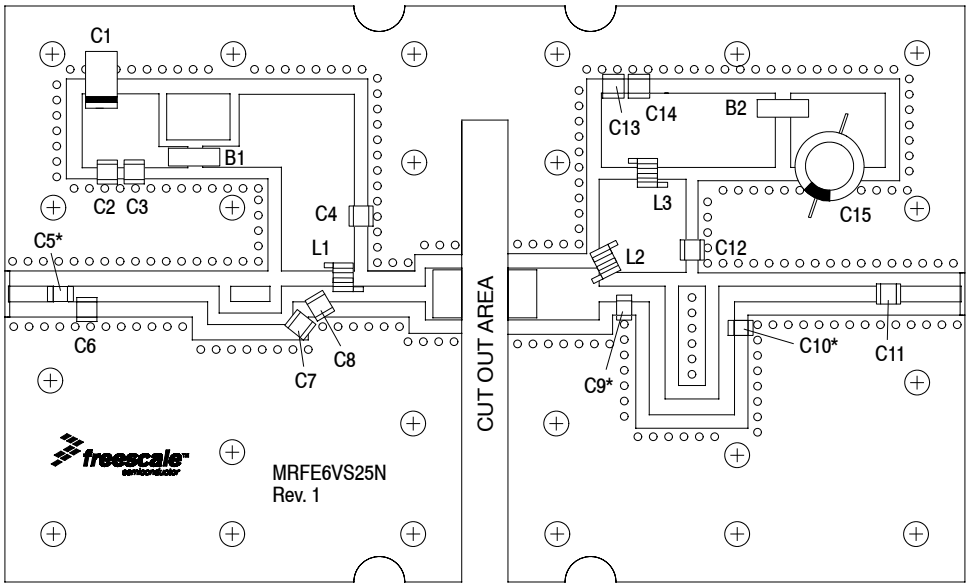

*C5, C9 and C10 are mounted vertically.

Figure 5. MRFE6VS25NR1 Narrowband Test Circuit Component Layout — 512 MHz

Table 7. MRFE6VS25NR1 Narrowband Test Circuit Component Designations and Values — 512 MHz

Part	Description	Part Number	Manufacturer
B1, B2	Long Ferrite Beads	2743021447	Fair-Rite
C1	22 μF, 35 V Tantalum Capacitor	T491X226K035AT	Kemet
C2, C13	0.1 μF Chip Capacitors	CDR33BX104AKWY	AVX
C3, C14	0.01 μF Chip Capacitors	C0805C103K5RAC	Kemet
C4, C11, C12	180 pF Chip Capacitors	ATC100B181JT300XT	ATC
C5	18 pF Chip Capacitor	ATC100B180JT500XT	ATC
C6	2.7 pF Chip Capacitor	ATC100B2R7BT500XT	ATC
C7	15 pF Chip Capacitor	ATC100B150JT500XT	ATC
C8	36 pF Chip Capacitor	ATC100B360JT500XT	ATC
C9	4.3 pF Chip Capacitor	ATC100B4R3CT500XT	ATC
C10	13 pF Chip Capacitor	ATC100B130JT500XT	ATC
C15	470 μF, 63 V Electrolytic Capacitor	MCGPR63V477M13X26-RH	Multicomp
L1	33 nH Inductor	1812SMS-33NJLC	Coilcraft
L2	12.5 nH Inductor	A04TJLC	Coilcraft
L3	82 nH Inductor	1812SMS-82NJLC	Coilcraft
PCB	0.030″, ε_r = 2.55	AD255A	Arlon

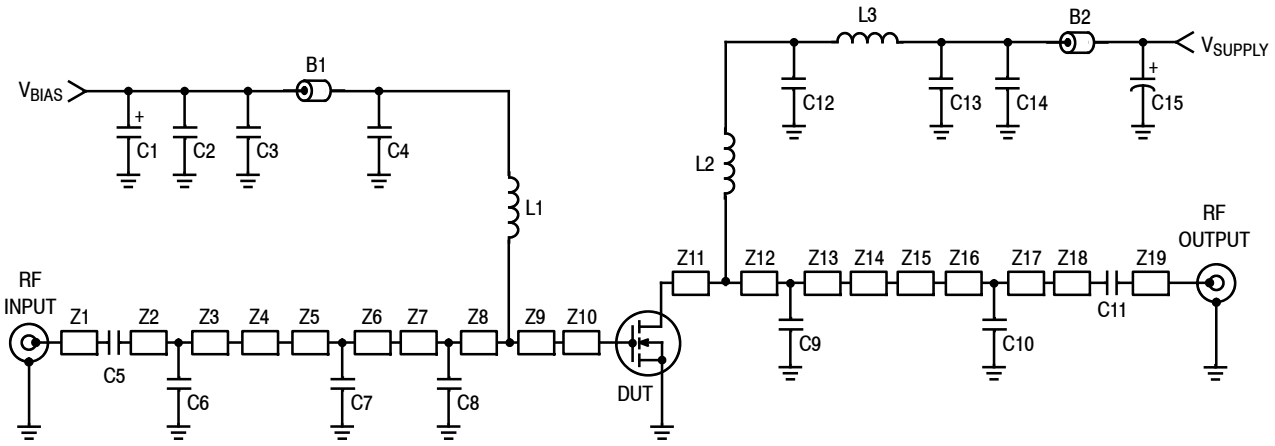

Figure 6. MRFE6VS25NR1 Narrowband Test Circuit Schematic — 512 MHz

Table 8. MRFE6VS25NR1 Narrowband Test Circuit Microstrips — 512 MHz

Microstrip	Description
Z1	0.235″ × 0.082″ Microstrip
Z2	0.042″ × 0.082″ Microstrip
Z3	0.682″ × 0.082″ Microstrip
Z4*	0.200″ × 0.060″ Microstrip
Z5	0.324″ × 0.060″ Microstrip
Z6*	0.200″ × 0.060″ Microstrip
Z7	0.067″ × 0.082″ Microstrip
Z8	0.142″ × 0.082″ Microstrip
Z9	0.481″ × 0.082″ Microstrip
Z10	0.190″ × 0.270″ Microstrip

Microstrip	Description
Z11	0.475″ × 0.270″ Microstrip
Z12	0.091″ × 0.082″ Microstrip
Z13	0.170″ × 0.082″ Microstrip
Z14*	0.670″ × 0.082″ Microstrip
Z15	0.280″ × 0.082″ Microstrip
Z16*	0.413″ × 0.082″ Microstrip
Z17*	0.259″ × 0.082″ Microstrip
Z18	0.761″ × 0.082″ Microstrip
Z19	0.341″ × 0.082″ Microstrip

* Line length includes microstrip bends

TYPICAL CHARACTERISTICS — 512 MHz

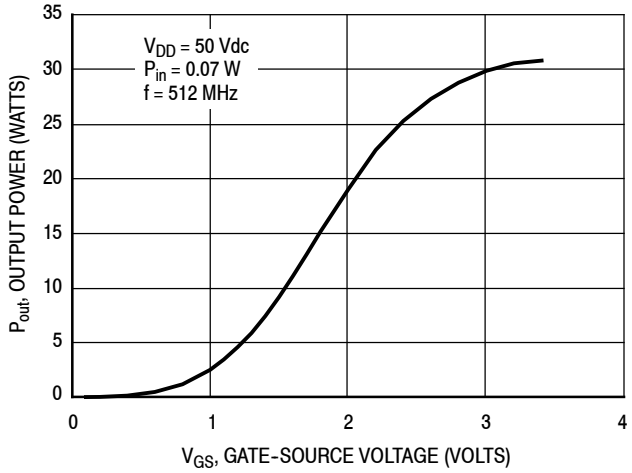

Figure 7. CW Output Power versus Gate-Source Voltage at a Constant Input Power

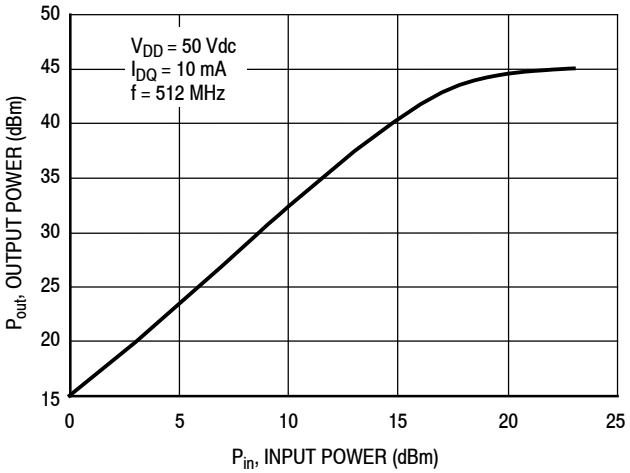

f (MHz)	P1dB (W)	P3dB (W)
512	27.8	31.4

Figure 8. CW Output Power versus Input Power

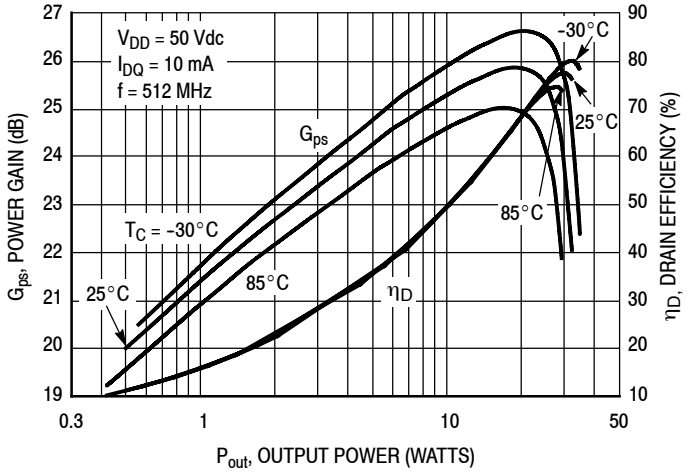

Figure 9. Power Gain and Drain Efficiency versus CW Output Power

512 MHz NARROWBAND PRODUCTION TEST FIXTURE

V_{DD} = 50 Vdc, I_{DQ} = 10 mA, P_{out} = 25 W Peak

f MHz	Z_{source} Ω	Z_{load} Ω
512	1.56 + j11.6	9.5 + j18.3

Z_{source} = Test circuit impedance as measured from gate to ground.

Z_{load} = Test circuit impedance as measured from drain to ground.

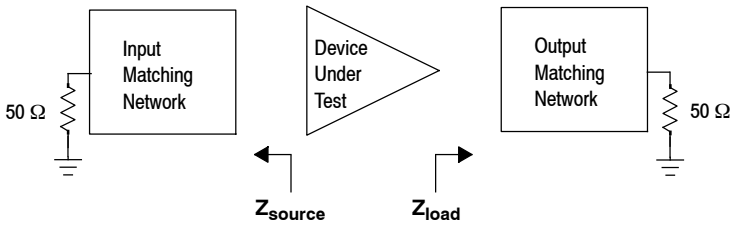

Figure 10. Narrowband Series Equivalent Source and Load Impedance — 512 MHz

1.8–30 MHz BROADBAND REFERENCE CIRCUIT

Table 9. 1.8–30 MHz Broadband Performance (In NXP Reference Circuit, 50 ohm system)
V_{DD} = 50 Volts, I_{DQ} = 100 mA

Signal Type	P_{out} (W)	f (MHz)	G_{ps} (dB)	η_D (%)	IMD (dBc)
Two-Tone (10 kHz spacing)	25 PEP	1.8	25.7	51.5	–30.7
		10	25.8	50.7	–34.8
		30	24.8	50.7	–33.0

Table 10. Load Mismatch/Ruggedness (In NXP Reference Circuit)

Frequency (MHz)	Signal Type	VSWR	P_{in} (W)	Test Voltage, V_{DD}	Result
30	CW	>65:1 at all Phase Angles	0.23 (3 dB Overdrive)	50	No Device Degradation

1.8–30 MHz BROADBAND REFERENCE CIRCUIT

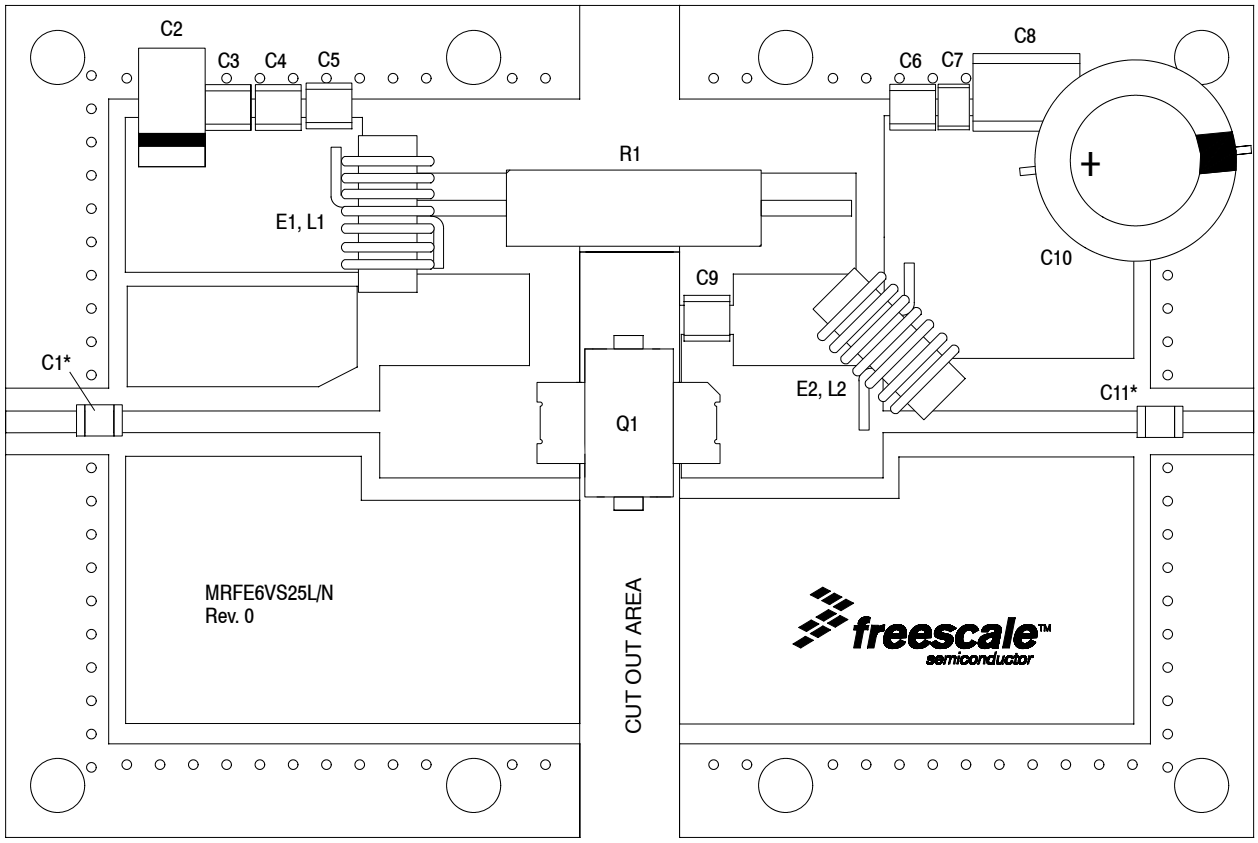

*C1 and C11 are mounted vertically.

Figure 11. MRFE6VS25NR1 Broadband Reference Circuit Component Layout — 1.8–30 MHz

Table 11. MRFE6VS25NR1 Broadband Reference Circuit Component Designations and Values — 1.8–30 MHz

Part	Description	Part Number	Manufacturer
C1, C5, C6, C9, C11	20K pF Chip Capacitors	ATC200B203KT50XT	ATC
C2	10 μF, 35 V Tantalum Capacitor	T491D106K035AT	Kemet
C3	0.1 μF Chip Capacitor	CDR33BX104AKWY	AVX
C4	2.2 μF Chip Capacitor	C3225X7R1H225KT	TDK
C7	0.1 μF Chip Capacitor	GRM319R72A104KA01D	Murata
C8	2.2 μF Chip Capacitor	G2225X7R225KT3AB	ATC
C10	220 μF, 100 V Electolytic Capacitor	MCGPR100V227M16X26-RH	Multicomp
E1	#43 Ferrite Toroid	5943001101	Fair–Rite
E2	#61 Ferrite Toroid	5961001101	Fair–Rite
L1	4 Turns, 22 AWG, Toroid Transformer with Ferrite E1	8077 Copper Magnetic Wire	Belden
L2	26 Turns, 22 AWG, Toroid Transformer with Ferrite E2	8077 Copper Magnetic Wire	Belden
Q1	RF Power LDMOS Transistor	MRFE6VS25NR1	NXP
R1	1 kΩ, 3 W Axial Leaded Resistor	CPF31K0000FKE14	Vishay
PCB	0.030″, ε_r = 4.8	S1000	Shenzhen Multilayer PCB Technology

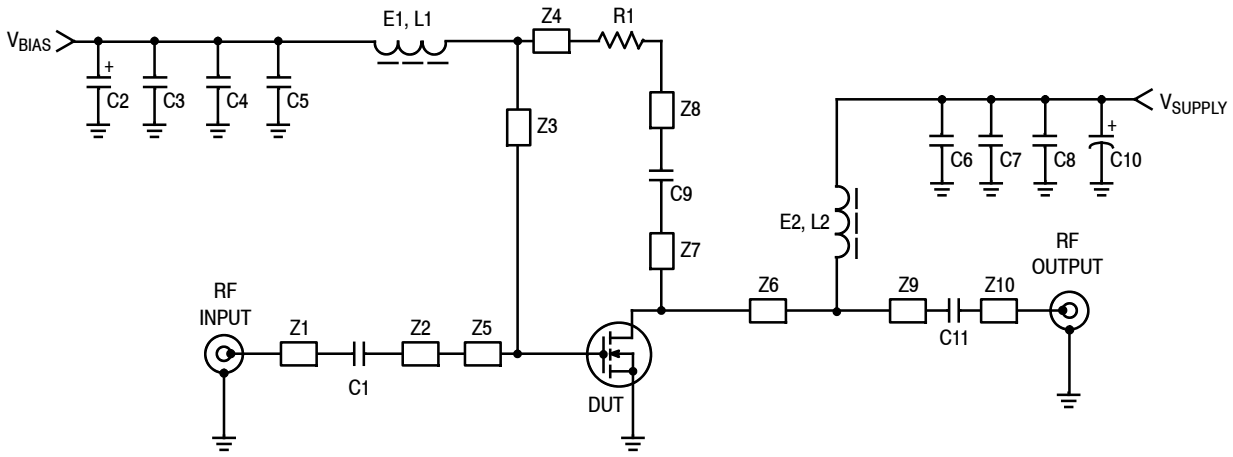

Figure 12. MRFE6VS25NR1 Broadband Reference Circuit Schematic — 1.8–30 MHz

Table 12. MRFE6VS25NR1 Broadband Reference Test Circuit Microstrips — 1.8–30 MHz

Microstrip	Description
Z1, Z10	0.141″ × 0.047″ Microstrip
Z2, Z9	0.625″ × 0.047″ Microstrip
Z3	0.119″ × 0.219″ Microstrip

Microstrip	Description
Z4, Z8	0.422″ × 0.241″ Microstrip
Z5, Z6	0.469″ × 0.263″ Microstrip
Z7	0.119″ × 0.063″ Microstrip

TYPICAL CHARACTERISTICS — 1.8–30 MHz BROADBAND REFERENCE CIRCUIT

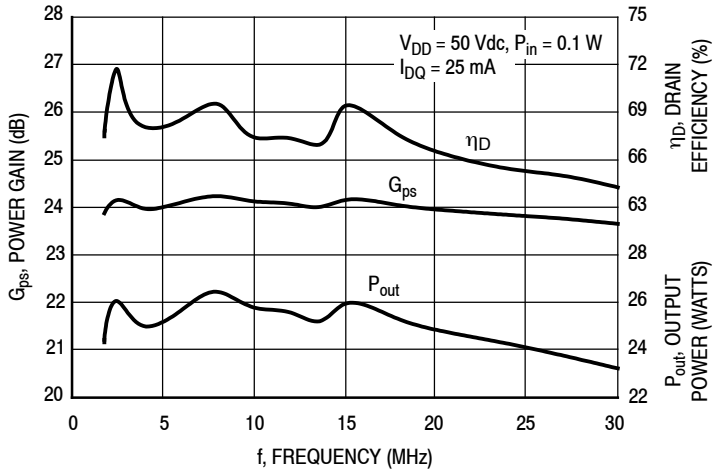

Figure 13. Power Gain, CW Output Power and Drain Efficiency versus Frequency at a Constant Input Power

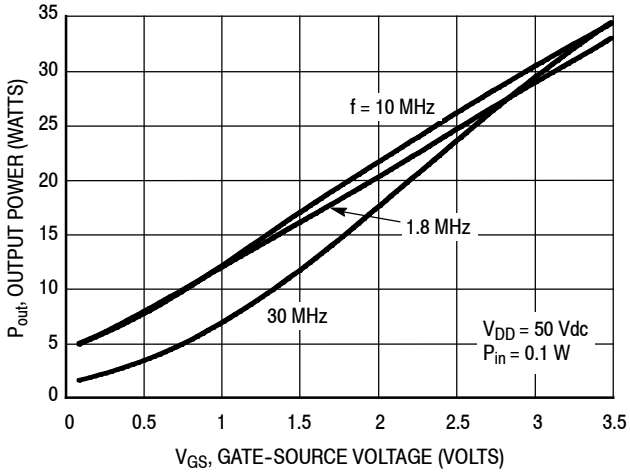

Figure 14. CW Output Power versus Gate–Source Voltage at a Constant Input Power

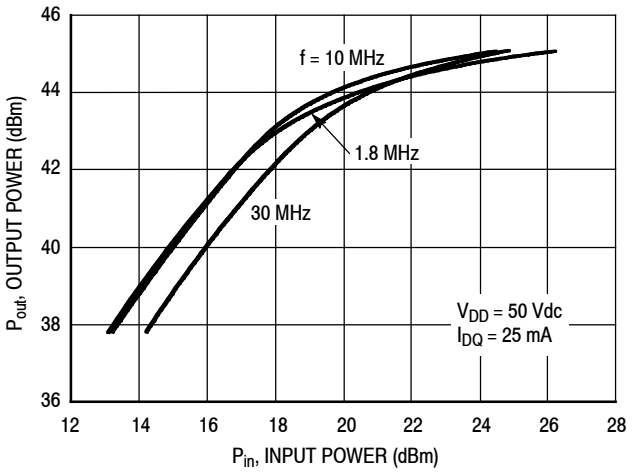

f (MHz)	P1dB (W)	P3dB (W)
1.8	23	28
10	25	30
30	25	30

Figure 15. CW Output Power versus Input Power

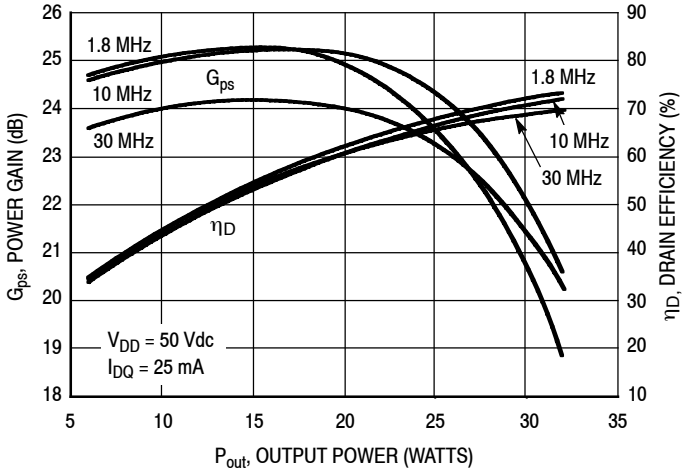

Figure 16. Power Gain and Drain Efficiency versus CW Output Power

TYPICAL CHARACTERISTICS — 1.8–30 MHz BROADBAND REFERENCE CIRCUIT — TWO-TONE (1)

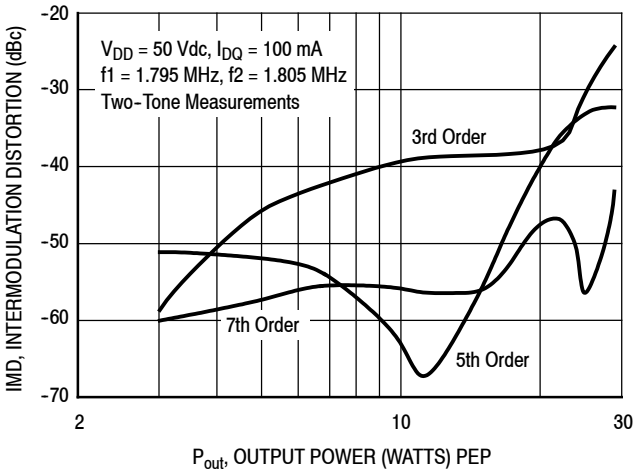

Figure 17. Intermodulation Distortion Products versus Output Power — 1.8 MHz

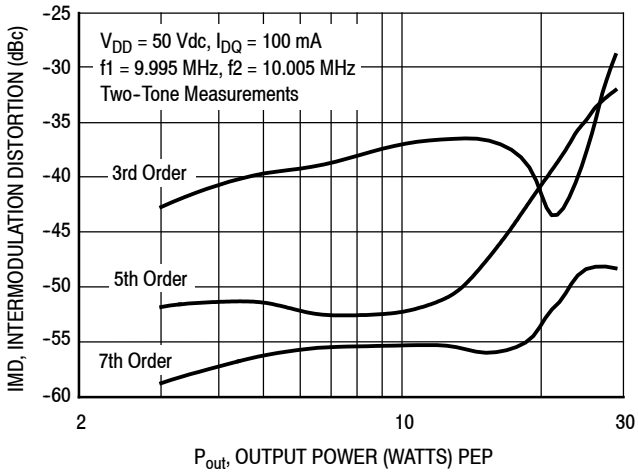

Figure 18. Intermodulation Distortion Products versus Output Power — 10 MHz

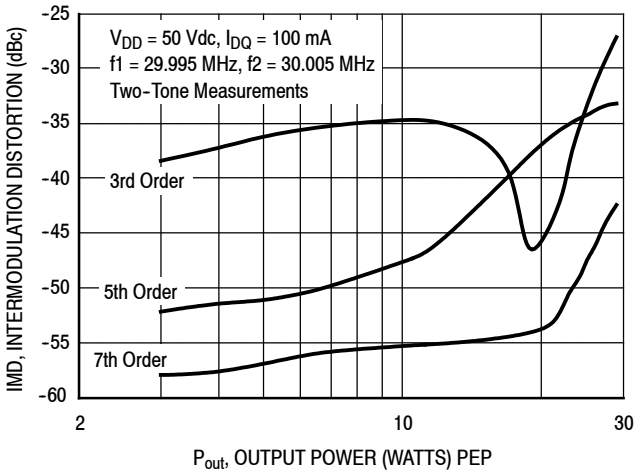

Figure 19. Intermodulation Distortion Products versus Output Power — 30 MHz

1. The distortion products are referenced to one of the two tones and the peak envelope power (PEP) is 6 dB above the power in a single tone.

1.8–30 MHz BROADBAND REFERENCE CIRCUIT

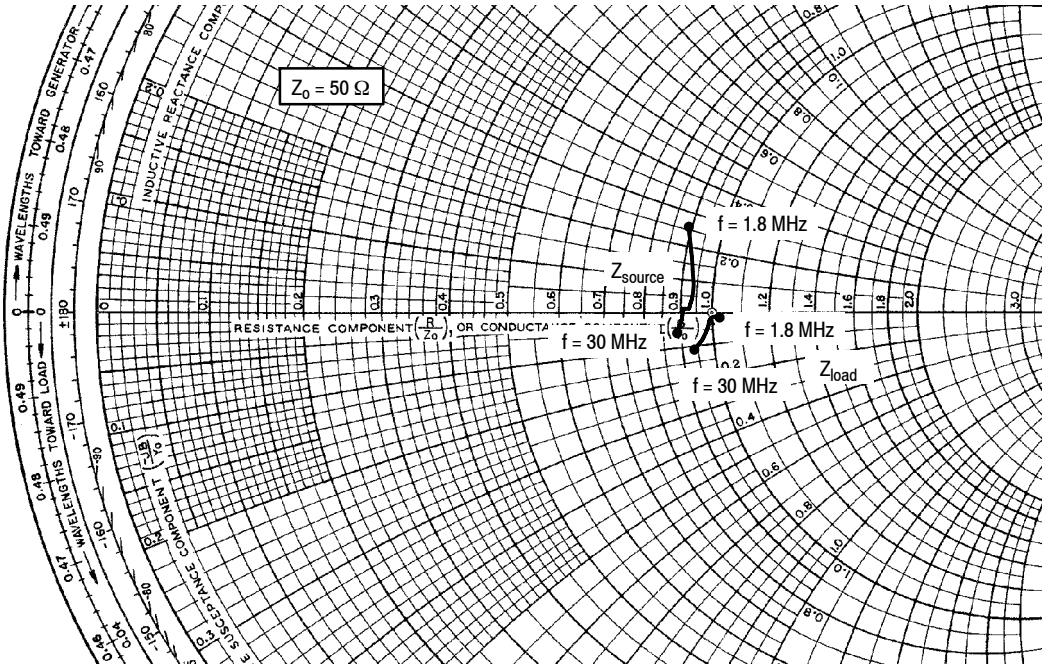

V_{DD} = 50 Vdc, I_{DQ} = 25 mA, P_{out} = 25 W CW

f MHz	Z_{source} Ω	Z_{load} Ω
1.8	44.4 + j12.8	50.8 - j0.70
5	47.2 + j4.40	50.0 - j0.70
10	46.4 + j1.50	49.7 - j0.90
15	46.0 + j0.70	49.4 - j1.60
20	45.7 - j0.40	48.8 - j2.90
25	45.1 - j1.60	47.9 - j4.30
30	44.6 - j2.90	47.0 - j5.70

Z_{source} = Test circuit impedance as measured from gate to ground.

Z_{load} = Test circuit impedance as measured from drain to ground.

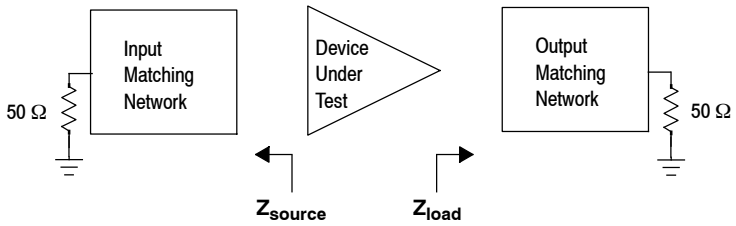

Figure 20. Broadband Series Equivalent Source and Load Impedance — 1.8–30 MHz

30–512 MHz BROADBAND REFERENCE CIRCUIT

Table 13. 30–512 MHz Broadband Performance (In NXP Reference Circuit, 50 ohm system)
V_{DD} = 50 Volts, I_{DQ} = 100 mA

Signal Type	P_{out} (W)	f (MHz)	G_{ps} (dB)	η_D (%)	IMD (dBc)
Two-Tone (200 kHz spacing)	25 PEP	30	17.1	34.8	–32.4
		100	18.1	37.7	–33.3
		512	17.3	30.1	–38.5

Table 14. Load Mismatch/Ruggedness (In NXP Reference Circuit)

Frequency (MHz)	Signal Type	VSWR	P_{in} (W)	Test Voltage, V_{DD}	Result
512	CW	>65:1 at all Phase Angles	1.6 (3 dB Overdrive)	50	No Device Degradation

30–512 MHz BROADBAND REFERENCE CIRCUIT

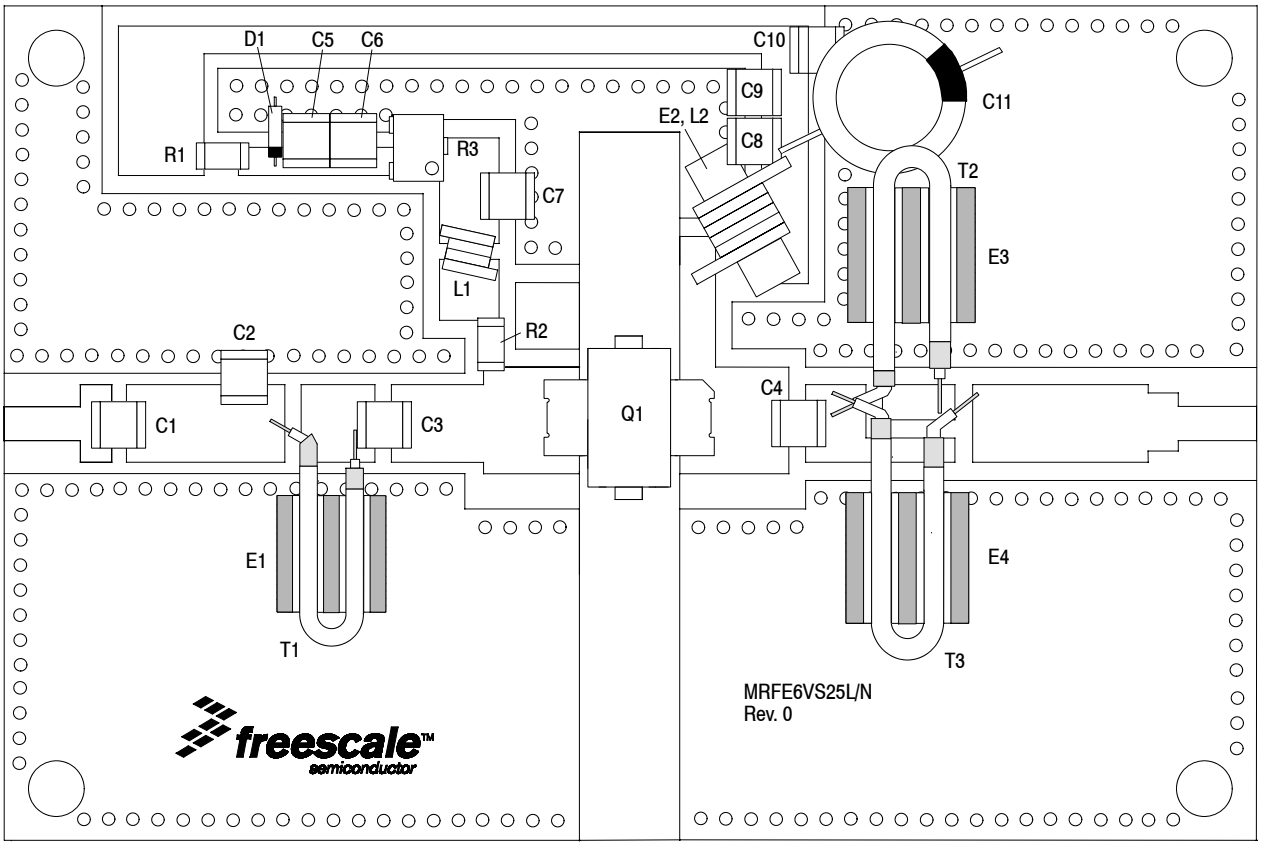

Note: See Figure 21a for a more detailed view of the semi-flex cables with shields and #61 multi-aperture cores.

Figure 21. MRFE6VS25NR1 Broadband Reference Circuit Component Layout — 30–512 MHz

Table 15. MRFE6VS25NR1 Broadband Reference Circuit Component Designations and Values — 30–512 MHz

Part	Description	Part Number	Manufacturer
C1, C3, C6, C7, C8	1,000 pF Chip Capacitors	ATC100B102JT50XT	ATC
C2	2.7 pF Chip Capacitor	ATC100B2R7BT500XT	ATC
C4	15 nF Chip Capacitor	C3225CH2A153JT	TDK
C5, C9	10 nF Chip Capacitors	GRM3195C1E103JA01	Murata
C10	1 μF Chip Capacitor	C3225JB2A105KT	TDK
C11	220 μF, 100 V Electrolytic Capacitor	MCGPR100V227M16X26-RH	Multicomp
D1	8.2 V, 1 W Zener Diode	1N4738A	Fairchild Semiconductor
E1, E3, E4	#61 Multi-aperture Cores	2861001502	Fair-Rite
E2	Ferrite Core Bead	21-201-J	Ferronics
L1	47 nH Inductor	1812SMS-47NJLC	Coilcraft
L2	4 Turns, 20 AWG, Toroid Transformer with Ferrite E2	8076 Copper Magnetic Wire	Belden
Q1	RF Power LDMOS Transistor	MRFE6VS25NR1	NXP
R1	5.6 kΩ, 1/4 W Chip Resistor	CRCW12065K60FKEA	Vishay
R2	15 Ω, 1/4 W Chip Resistor	CRCW120615R0FKEA	Vishay
R3	5 kΩ Potentiometer CMS Cermet Multi-turn	3224W-1-502E	Bourns
T1	25 Ω Semi-flex Cable, 0.945″ Shield Length	D260-4118-0000	Microdot
T2, T3	25 Ω Semi-flex Cables, 1.340″ Shield Length	D260-4118-0000	Microdot
PCB	0.030″, ε_r = 3.5	TC350	Arlon

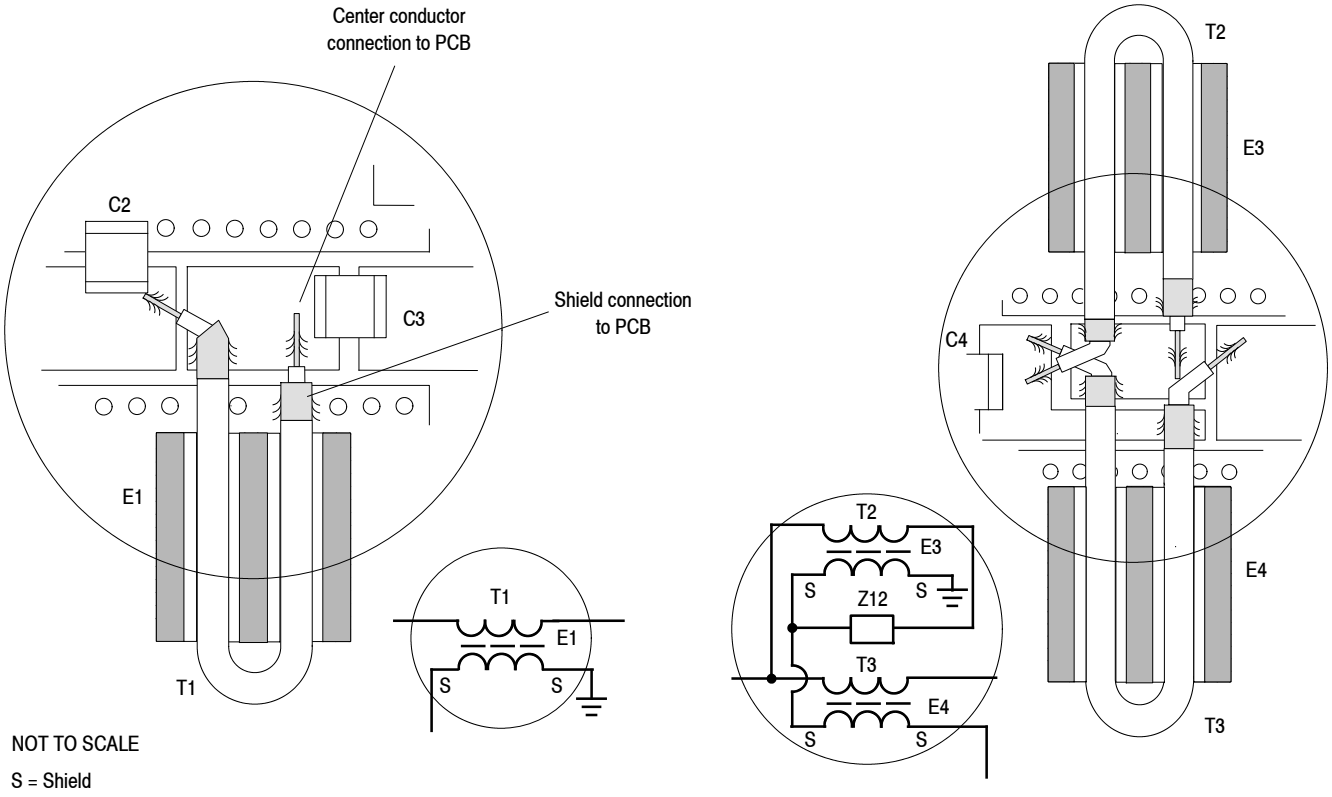

Figure 21a. Detailed View of Semi-flex Cables with Shields and #61 Multi-aperture Cores

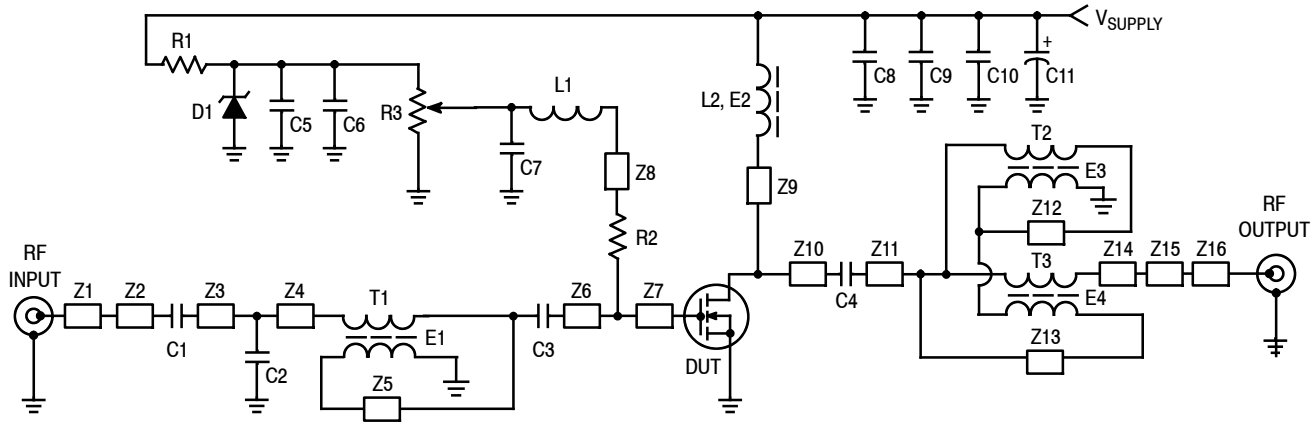

Figure 22. MRFE6VS25NR1 Broadband Reference Circuit Schematic — 30-512 MHz

Table 16. MRFE6VS25NR1 Broadband Reference Circuit Microstrips — 30-512 MHz

Microstrip	Description
Z1	0.180″ × 0.080″ Microstrip
Z2	0.080″ × 0.190″ Microstrip
Z3	0.230″ × 0.190″ Microstrip
Z4	0.150″ × 0.190″ Microstrip
Z5	0.180″ × 0.190″ Microstrip
Z6	0.220″ × 0.190″ Microstrip
Z7	0.230″ × 0.260″ Microstrip
Z8	0.140″ × 0.150″ Microstrip

Microstrip	Description
Z9	0.080″ × 0.310″ Microstrip
Z10	0.260″ × 0.260″ Microstrip
Z11	0.140″ × 0.190″ Microstrip
Z12	0.170″ × 0.080″ Microstrip
Z13	0.210″ × 0.060″ Microstrip
Z14	0.420″ × 0.190″ Microstrip
Z15	0.070″ × 0.140″ Microstrip
Z16	0.190″ × 0.080″ Microstrip

TYPICAL CHARACTERISTICS — 30–512 MHz BROADBAND REFERENCE CIRCUIT

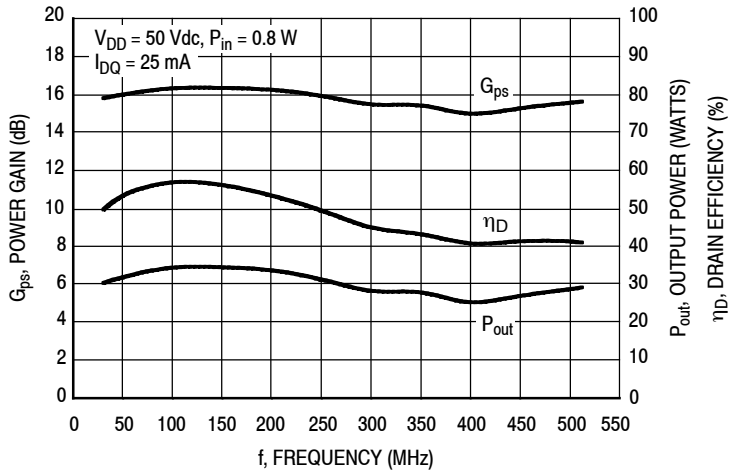

Figure 23. Power Gain, CW Output Power and Drain Efficiency versus Frequency at a Constant Input Power

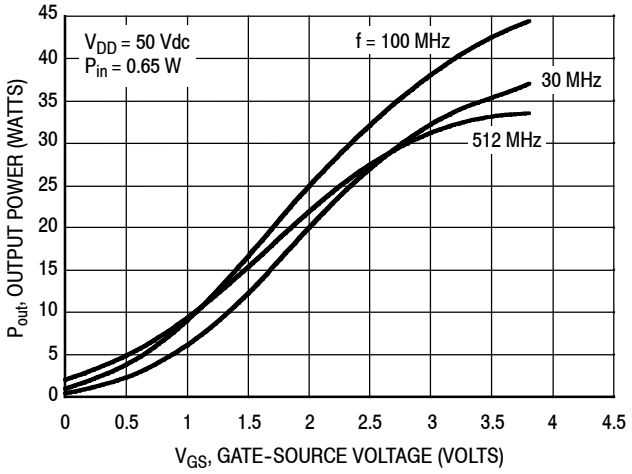

Figure 24. CW Output Power versus Gate–Source Voltage at a Constant Input Power — 0.65 W

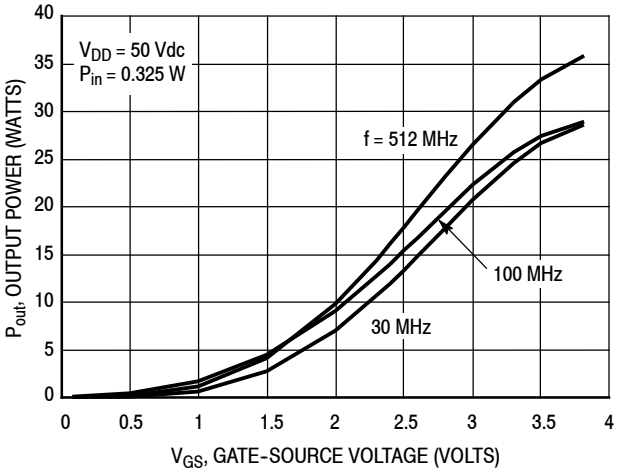

Figure 25. CW Output Power versus Gate–Source Voltage at a Constant Input Power — 0.325 W

TYPICAL CHARACTERISTICS — 30–512 MHz BROADBAND REFERENCE CIRCUIT

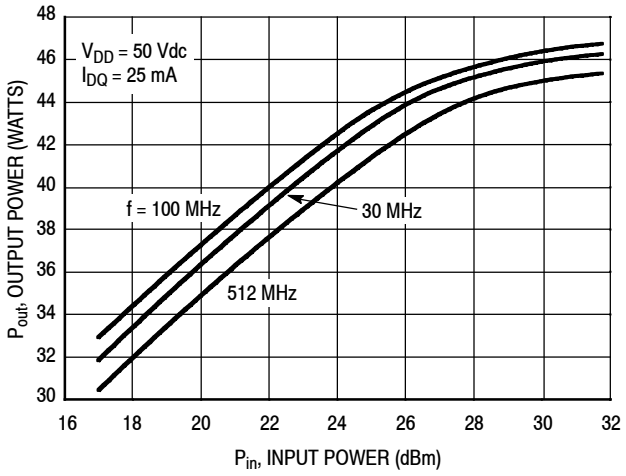

f (MHz)	P1dB (W)	P3dB (W)
30	34.4	52.5
100	37.2	47.8
512	30.1	34.3

Figure 26. CW Output Power versus Input Power

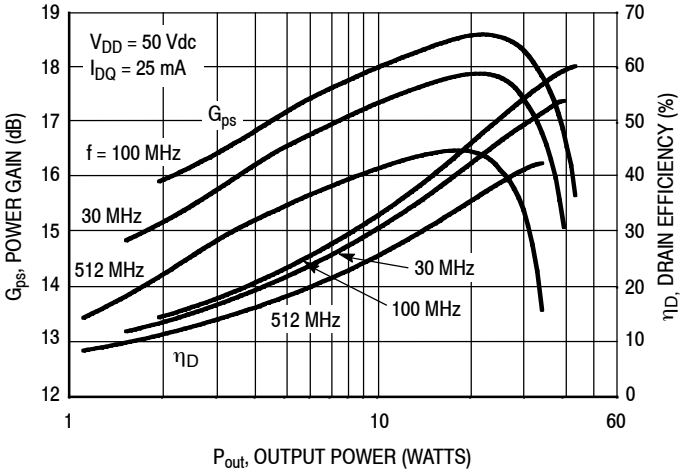

Figure 27. Power Gain and Drain Efficiency versus CW Output Power

TYPICAL CHARACTERISTICS — 30–512 MHz BROADBAND REFERENCE CIRCUIT — TWO-TONE (1)

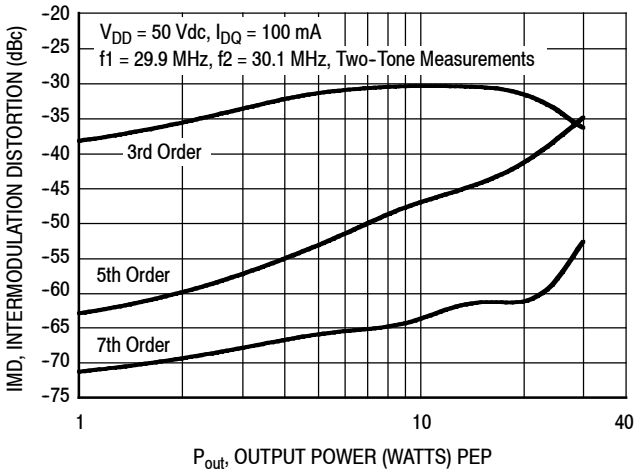

Figure 28. Intermodulation Distortion Products versus Output Power — 30 MHz

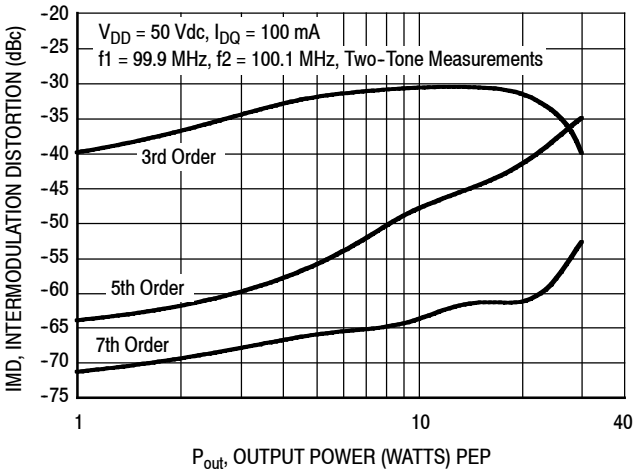

Figure 29. Intermodulation Distortion Products versus Output Power — 100 MHz

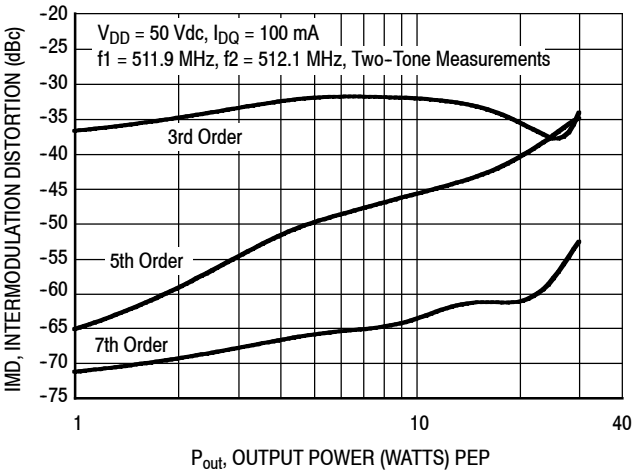

Figure 30. Intermodulation Distortion Products versus Output Power — 512 MHz

1. The distortion products are referenced to one of the two tones and the peak envelope power (PEP) is 6 dB above the power in a single tone.

30–512 MHz BROADBAND REFERENCE CIRCUIT

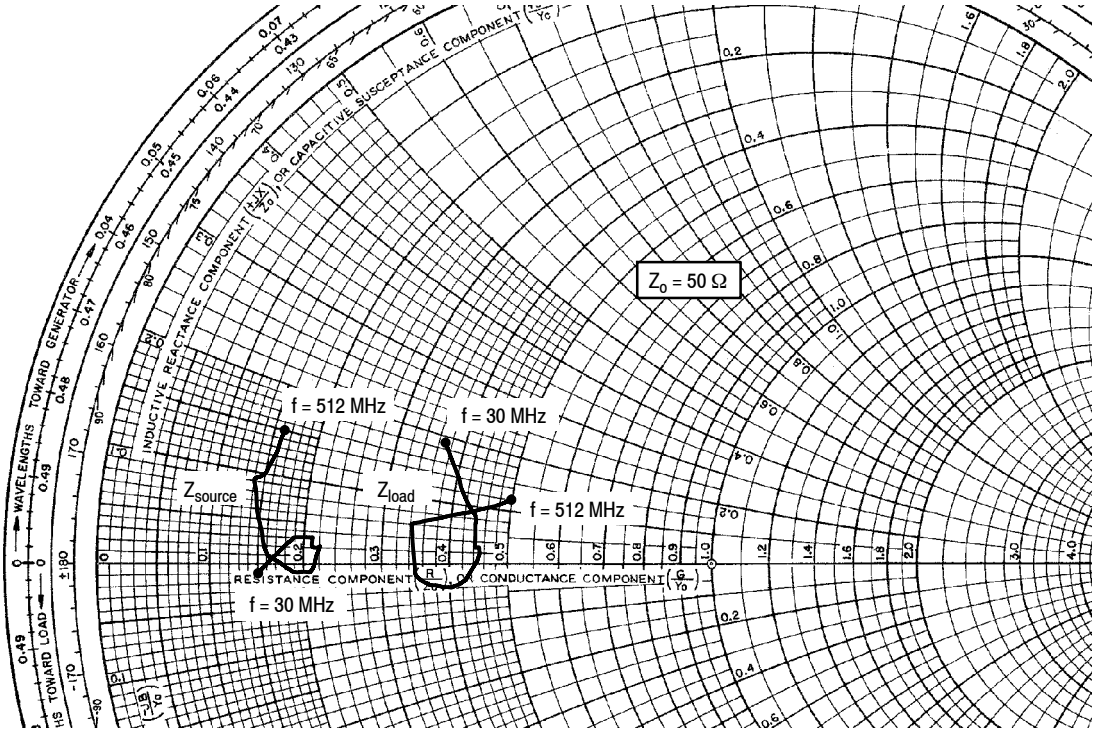

V_{DD} = 50 Vdc, I_{DQ} = 25 mA, P_{out} = 25 W CW

f MHz	Z_{source} Ω	Z_{load} Ω
30	7.60 - j0.40	18.3 + j9.40
64	9.30 + j1.40	21.9 + j4.00
88	10.3 + j1.40	22.2 + j1.90
98	10.6 + j1.20	22.2 + j1.40
100	10.7 + j1.20	22.3 + j1.30
108	10.9 + j0.90	22.5 + j0.50
144	10.7 - j0.40	21.2 - j1.50
170	9.70 - j0.60	19.8 - j1.80
230	8.10 + j0.30	17.4 - j0.80
352	7.20 + j4.30	17.0 + j2.80
450	7.40 + j5.00	21.3 + j4.60
512	8.10 + j7.60	25.2 + j5.90

Z_{source} = Test circuit impedance as measured from gate to ground.

Z_{load} = Test circuit impedance as measured from drain to ground.

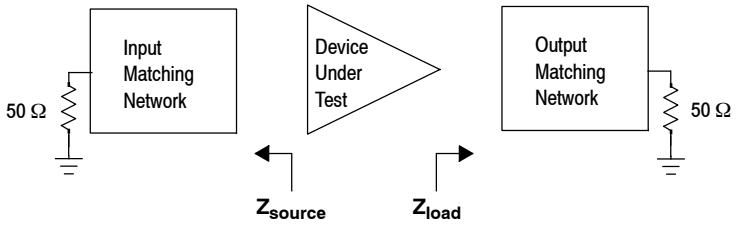

Figure 31. Broadband Series Equivalent Source and Load Impedance — 30–512 MHz

1030 MHz NARROWBAND REFERENCE CIRCUIT

Table 17. 1030 MHz Narrowband Performance (In NXP Reference Circuit, 50 ohm system)
V_{DD} = 50 Volts, I_{DQ} = 25 mA

Signal Type	P_{out} (W)	f (MHz)	G_{ps} (dB)	η_D (%)
CW	25	1030	22.5	60.0

Table 18. Load Mismatch/Ruggedness (In NXP Reference Circuit)

Frequency (MHz)	Signal Type	VSWR	P_{in} (W)	Test Voltage, V_{DD}	Result
1030	CW	>65:1 at all Phase Angles	0.34 (3 dB Overdrive)	50	No Device Degradation

1030 MHz NARROWBAND REFERENCE TEST FIXTURE

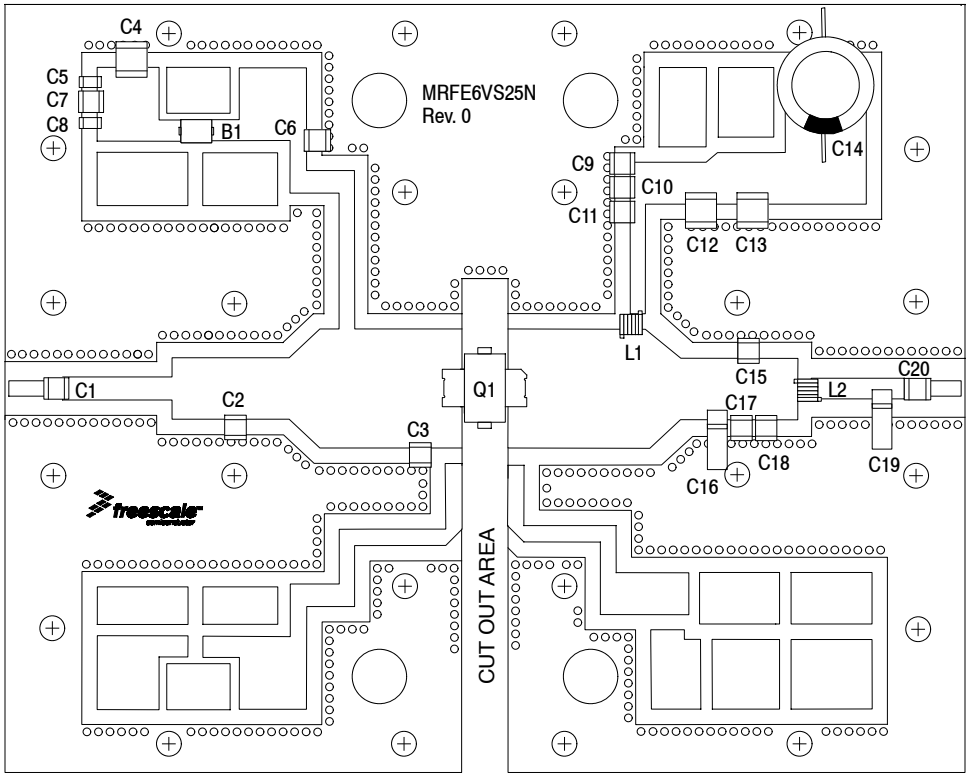

Figure 32. MRFE6VS25NR1 Narrowband Reference Circuit Component Layout — 1030 MHz

Table 19. MRFE6VS25NR1 Narrowband Reference Circuit Component Designations and Values — 1030 MHz

Part	Description	Part Number	Manufacturer
B1	Short Ferrite Bead	2743019447	Fair-Rite
C1, C3	22 pF Chip Capacitors	ATC100B220JT500XT	ATC
C2	6.2 pF Chip Capacitor	ATC100B6R2BT500XT	ATC
C4	10 μF Chip Capacitor	GRM55DR61H106KA88L	Murata
C5	0.01 μF Chip Capacitor	GRM319R72A103KA01D	Murata
C6	43 pF Chip Capacitor	ATC100B430JT500XT	ATC
C7	0.1 μF Chip Capacitor	GRM32MR71H104JA01L	Murata
C8	1.0 μF Chip Capacitor	GRM31MR71H105KA88L	Murata
C9	0.1 μF Chip Capacitor	C1206C104K1RAC-TU	Kemet
C10	20K pF Chip Capacitor	ATC200B203KT50XT	ATC
C11	470 pF Chip Capacitor	ATC100B471JT200XT	ATC
C12, C13	22 μF Chip Capacitors	C5750KF1H226ZT	TDK
C14	470 pF, 63 V Electrolytic Capacitor	MCGPR63V477M13X26-RH	Multicomp
C15, C17	4.3 pF Chip Capacitors	ATC100B4R3CT500XT	ATC
C16, C19	0.6-4.5 pF Tuning Capacitors	27271SL	Johanson Components
C18	2.2 pF Chip Capacitor	ATC100B2R2JT500XT	ATC
C20	20 pF Chip Capacitor	ATC100B200JT500XT	ATC
L1	43 nH, 10 Turn Inductor	B10TJLC	Coilcraft
L2	2.5 nH, 1 Turn Inductor	A01TKLC	Coilcraft
Q1	RF Power LDMOS Transistor	MRFE6VS25NR1	NXP
PCB	0.030″, ε_r = 3.5	TL350	Arlon

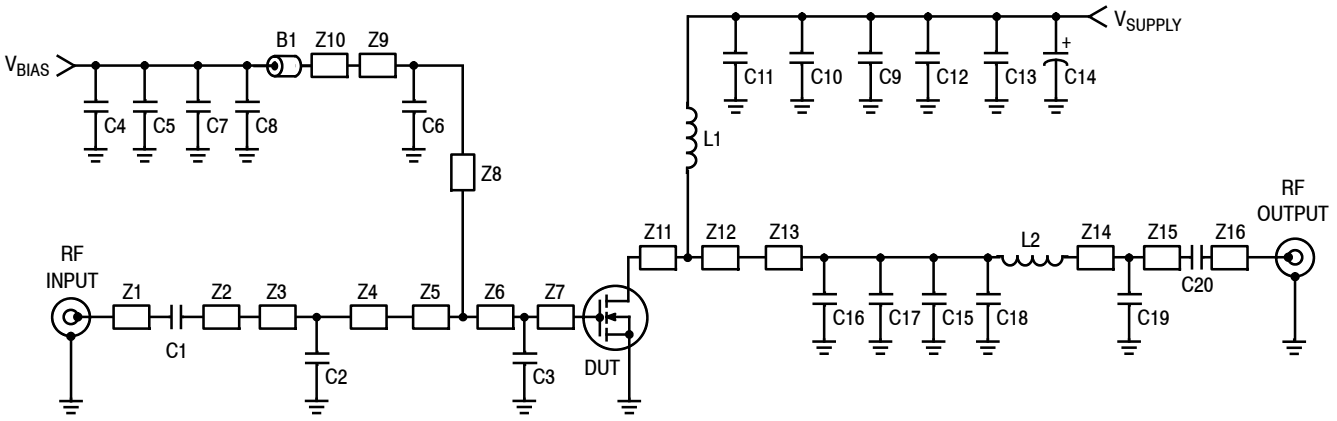

Figure 33. MRFE6VS25NR1 Narrowband Reference Circuit Schematic — 1030 MHz

Table 20. MRFE6VS25NR1 Narrowband Reverence Test Circuit Microstrips — 1030 MHz

Microstrip	Description
Z1	0.200″ × 0.080″ Microstrip
Z2	0.569″ × 0.120″ Microstrip
Z3	0.339″ × 0.320″ Microstrip
Z4	0.272″ × 0.320″ Microstrip
Z5, Z12	0.160″ × 0.320″ × 0.620″ Taper
Z6	0.522″ × 0.620″ Microstrip
Z7	0.218″ × 0.620″ Microstrip
Z8*	0.094″ × 1.121″ Microstrip

Microstrip	Description
Z9	0.350″ × 0.378″ Microstrip
Z10	0.151″ × 0.108″ Microstrip
Z11	0.699″ × 0.620″ Microstrip
Z13	0.243″ × 0.320″ Microstrip
Z14	0.350″ × 0.320″ Microstrip
Z15	0.450″ × 0.107″ Microstrip
Z16	0.200″ × 0.107″ Microstrip

* Line length includes microstrip bends

TYPICAL CHARACTERISTICS — 1030 MHz NARROWBAND REFERENCE CIRCUIT

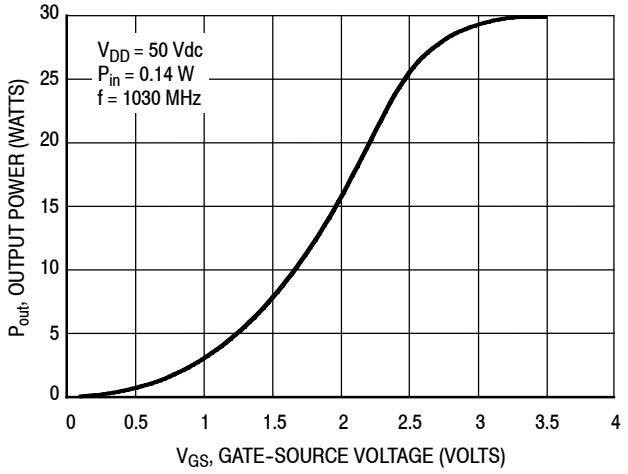

Figure 34. CW Output Power versus Gate−Source Voltage at a Constant Input Power

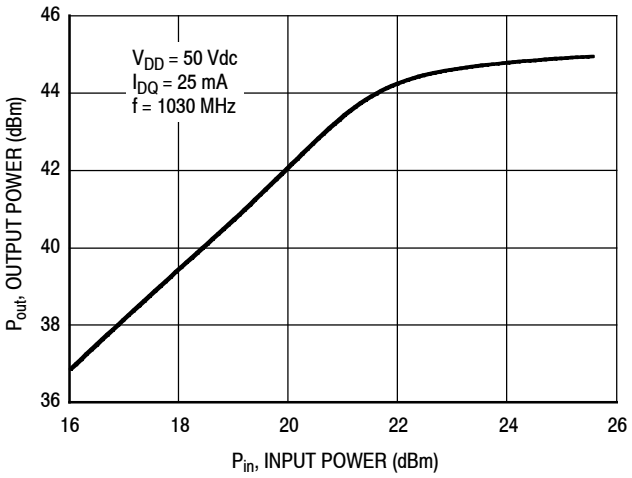

f (MHz)	P1dB (W)	P3dB (W)
1030	29	31

Figure 35. CW Output Power versus Input Power

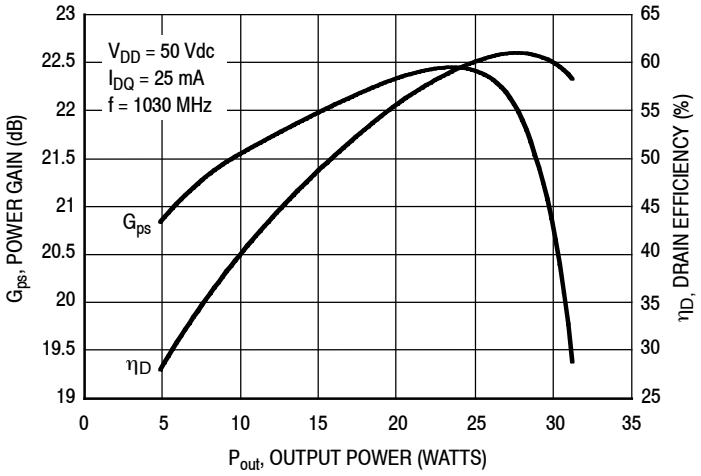

Figure 36. Power Gain and Drain Efficiency versus CW Output Power

1030 MHz NARROWBAND REFERENCE CIRCUIT

V_{DD} = 50 Vdc, I_{DQ} = 25 mA, P_{out} = 25 W CW

f MHz	Z_{source} Ω	Z_{load} Ω
1030	0.74 + j4.53	3.08 + j7.78

Z_{source} = Test circuit impedance as measured from gate to ground.

Z_{load} = Test circuit impedance as measured from drain to ground.

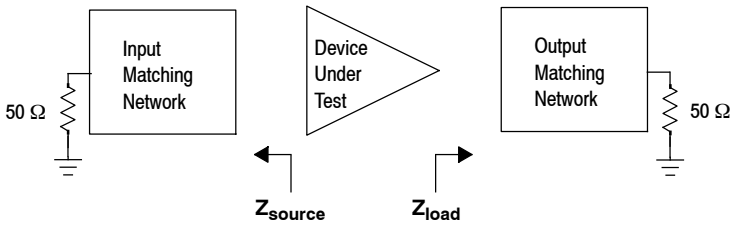

Figure 37. Narrowband Series Equivalent Source and Load Impedance — 1030 MHz

PACKAGE DIMENSIONS

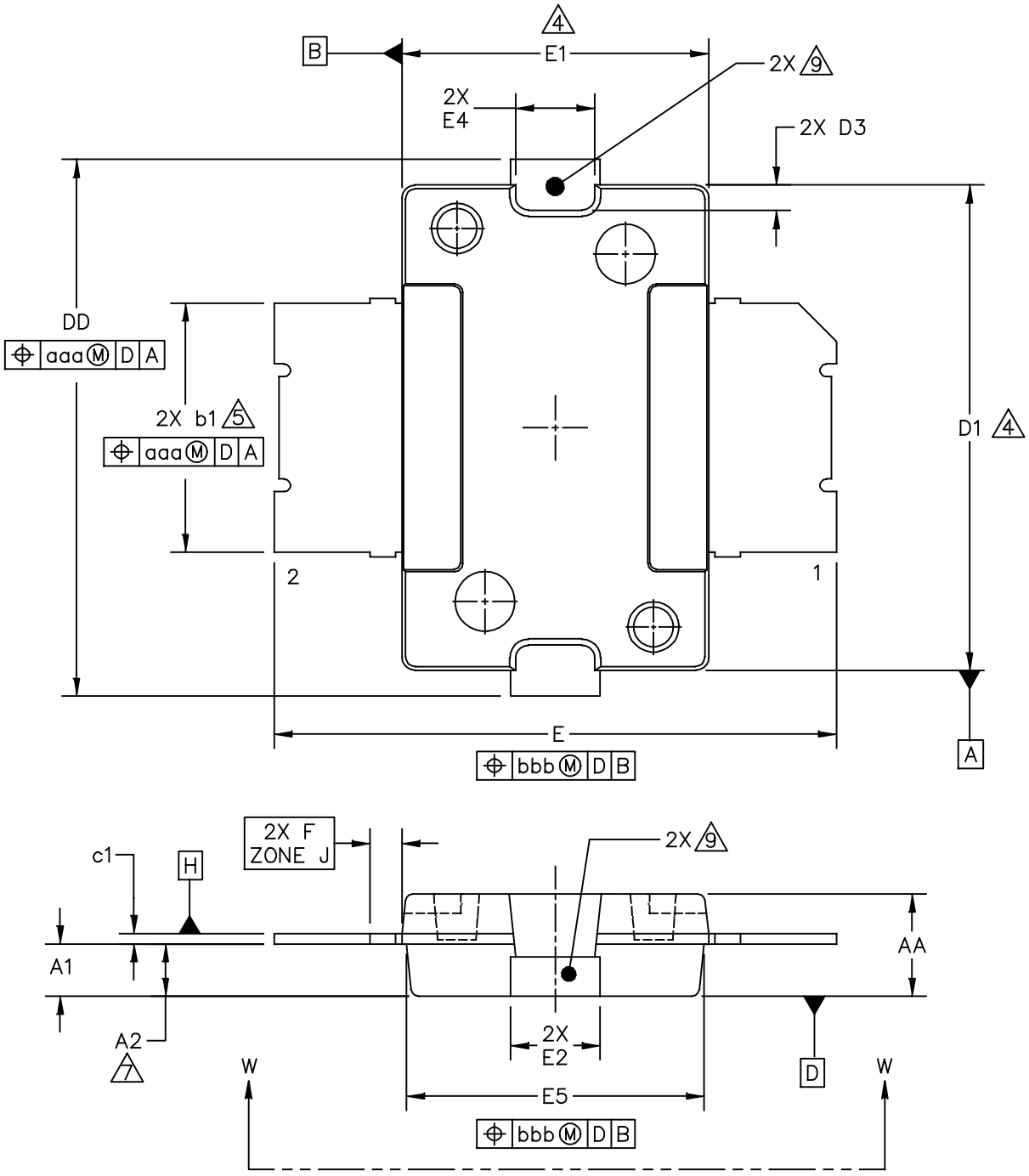

© NXP SEMICONDUCTORS N.V. ALL RIGHTS RESERVED	MECHANICAL OUTLINE	PRINT VERSION NOT TO SCALE
TITLE: TO-270-2	DOCUMENT NO: 98ASH98117A	REV: R
	STANDARD: NON-JEDEC	
	SOT1732-1	22 FEB 2016

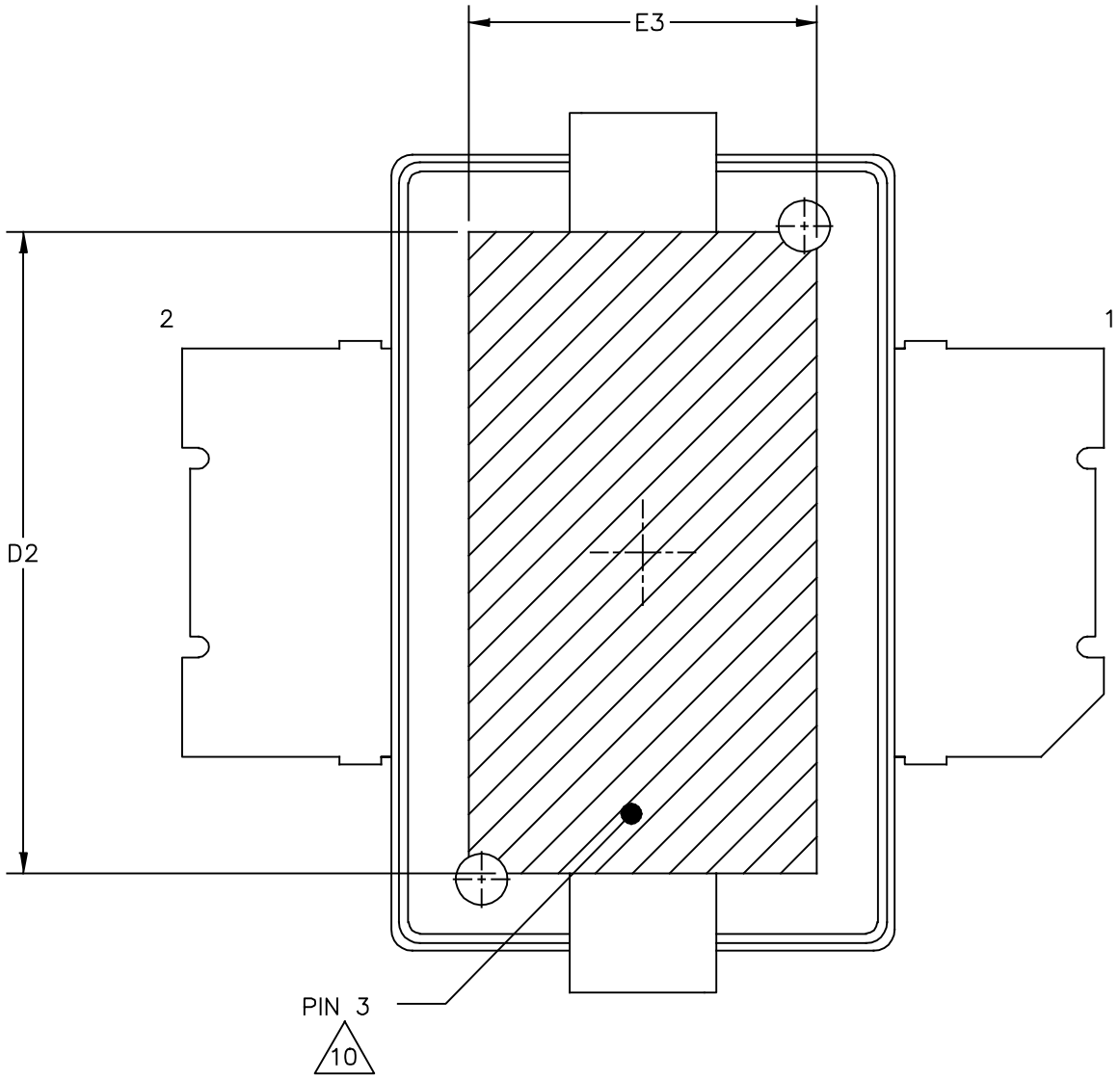

VIEW W–W
BOTTOM VIEW

© NXP SEMICONDUCTORS N.V. ALL RIGHTS RESERVED	MECHANICAL OUTLINE	PRINT VERSION NOT TO SCALE
TITLE: TO–270–2	DOCUMENT NO: 98ASH98117A	REV: R
	STANDARD: NON–JEDEC	
	SOT1732–1	22 FEB 2016

NOTES:

1. CONTROLLING DIMENSION: INCH
2. INTERPRET DIMENSIONS AND TOLERANCES PER ASME Y14.5M–1994.
3. DATUM PLANE H IS LOCATED AT TOP OF LEAD AND IS COINCIDENT WITH THE LEAD WHERE THE LEAD EXITS THE PLASTIC BODY AT THE TOP OF THE PARTING LINE.
4. DIMENSIONS D1 AND E1 DO NOT INCLUDE MOLD PROTRUSION. ALLOWABLE PROTRUSION IS .006 INCH (0.15 MM) PER SIDE. DIMENSIONS D1 AND E1 DO INCLUDE MOLD MISMATCH AND ARE DETERMINED AT DATUM PLANE H.
5. DIMENSION b1 DOES NOT INCLUDE DAMBAR PROTRUSION. ALLOWABLE DAMBAR PROTRUSION SHALL BE .005 INCH (0.13 MM) TOTAL IN EXCESS OF THE b1 DIMENSION AT MAXIMUM MATERIAL CONDITION.
6. DATUMS A AND B TO BE DETERMINED AT DATUM PLANE H.
7. DIMENSION A2 APPLIES WITHIN ZONE J ONLY.
8. DIMENSIONS DD AND E2 DO NOT INCLUDE MOLD PROTRUSION. OVERALL LENGTH INCLUDING MOLD PROTRUSION SHOULD NOT EXCEED 0.430 INCH (10.92 MM) FOR DIMENSION DD AND 0.080 INCH (2.03 MM) FOR DIMENSION E2. DIMENSIONS DD AND E2 DO INCLUDE MOLD MISMATCH AND ARE DETERMINED AT DATUM PLANE D.
9. THESE SURFACES OF THE HEAT SLUG ARE NOT PART OF THE SOLDERABLE SURFACES AND MAY REMAIN UNPLATED.
10. HATCHING REPRESENTS THE EXPOSED AREA OF THE HEAT SLUG. DIMENSIONS D2 AND E3 REPRESENT THE VALUES BETWEEN THE TWO OPPOSITE POINTS ALONG THE EDGES OF EXPOSED AREA OF THE HEAT SLUG.

	INCH		MILLIMETER			INCH		MILLIMETER	
DIM	MIN	MAX	MIN	MAX	DIM	MIN	MAX	MIN	MAX
AA	.078	.082	1.98	2.08	E4	.058	.066	1.47	1.68
A1	.039	.043	0.99	1.09	E5	.231	.235	5.87	5.97
A2	.040	.042	1.02	1.07	F	.025 BSC		0.64 BSC	
DD	.416	.424	10.57	10.77	b1	.193	.199	4.90	5.06
D1	.378	.382	9.60	9.70	c1	.007	.011	0.18	0.28
D2	.290	----	7.37	----	aaa	.004		0.10	
D3	.016	.024	0.41	0.61	bbb	.008		0.20	
E	.436	.444	11.07	11.28					
E1	.238	.242	6.04	6.15					
E2	.066	.074	1.68	1.88					
E3	.150	----	3.81	----					

© NXP SEMICONDUCTORS N.V.
ALL RIGHTS RESERVED

MECHANICAL OUTLINE | PRINT VERSION NOT TO SCALE

TITLE: TO–270–2

DOCUMENT NO: 98ASH98117A REV: R

STANDARD: NON–JEDEC

SOT1732–1 22 FEB 2016

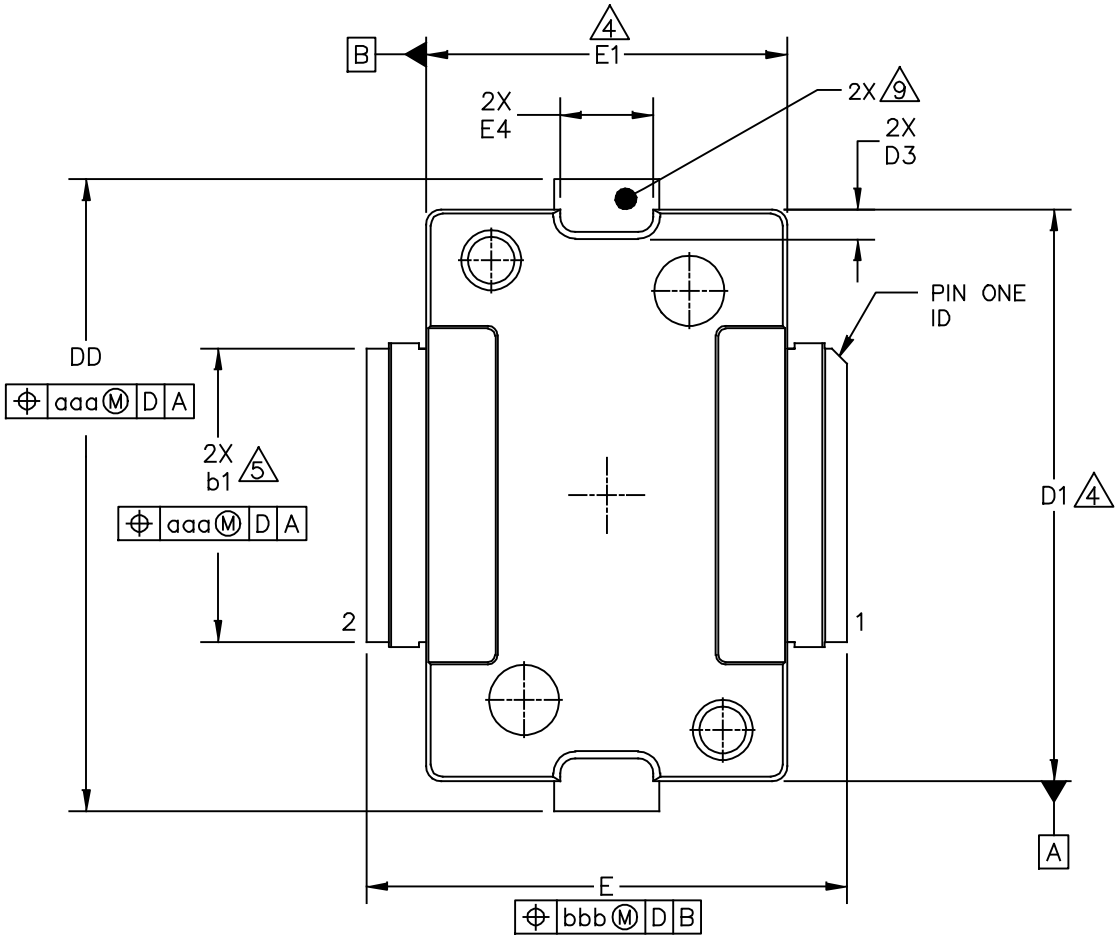

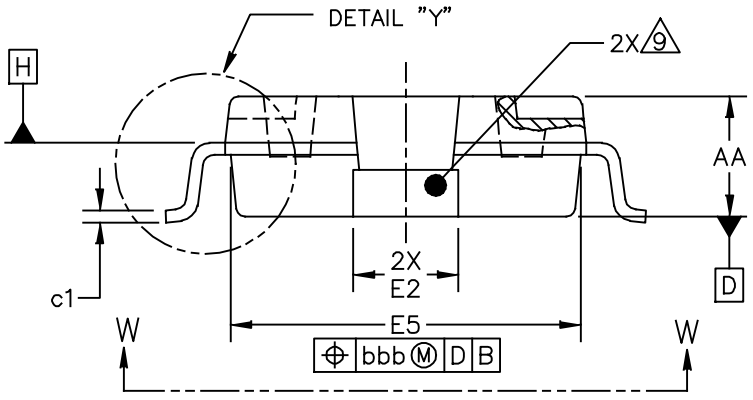

© NXP SEMICONDUCTORS N.V. ALL RIGHTS RESERVED	MECHANICAL OUTLINE	PRINT VERSION NOT TO SCALE
TITLE: TO-270G-2	DOCUMENT NO: 98ASA99301D	REV: D
	STANDARD: JEDEC TO-270 BA	
	SOT1731-1	28 MAR 2016

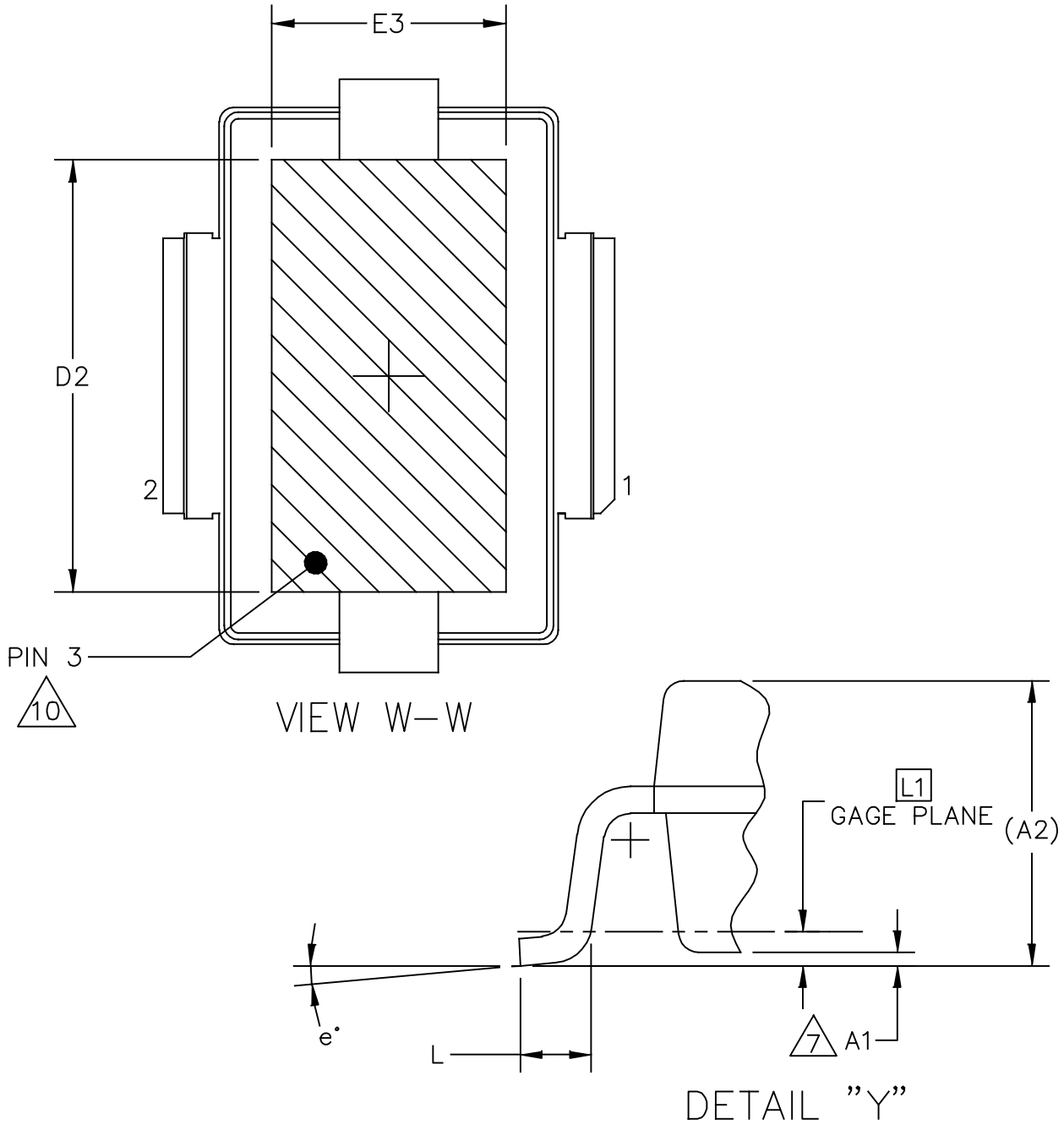

© NXP SEMICONDUCTORS N.V. ALL RIGHTS RESERVED	MECHANICAL OUTLINE	PRINT VERSION NOT TO SCALE
TITLE: TO–270G–2	DOCUMENT NO: 98ASA99301D	REV: D
	STANDARD: JEDEC TO–270 BA	
	SOT1731–1	28 MAR 2016

NOTES:
1. CONTROLLING DIMENSION: INCH

2. INTERPRET DIMENSIONS AND TOLERANCES PER ASME Y14.5M–1994.

3. DATUM PLANE H IS LOCATED AT TOP OF LEAD AND IS COINCIDENT WITH THE LEAD WHERE THE LEAD EXITS THE PLASTIC BODY AT THE TOP OF THE PARTING LINE.

4. DIMENSIONS "D1" AND "E1" DO NOT INCLUDE MOLD PROTRUSION. ALLOWABLE PROTRUSION IS .006 INCH (0.15MM) PER SIDE. DIMENSIONS "D1 AND "E1" DO INCLUDE MOLD MISMATCH AND ARE DETERMINED AT DATUM PLANE H.

5. DIMENSION b1 DOES NOT INCLUDE DAMBAR PROTRUSION. ALLOWABLE DAMBAR PROTRUSION SHALL BE .005 INCH (0.13 MM) TOTAL IN EXCESS OF THE b1 DIMENSION AT MAXIMUM MATERIAL CONDITION.

6. DATUMS A AND B TO BE DETERMINED AT DATUM PLANE H.

7. DIMENSION A1 IS MEASURED WITH REFERENCE TO DATUM D. THE POSITIVE VALUE IMPLIES THAT THE BOTTOM OF THE PACKAGE IS HIGHER THAN THE BOTTOM OF THE LEAD.

8. DIMENSIONS DD AND E2 DO NOT INCLUDE MOLD PROTRUSION. OVERALL LENGTH INCLUDING MOLD PROTRUSION SHOULD NOT EXCEED 0.430 INCH (10.92 MM) FOR DIMENSION DD AND 0.080 INCH (2.03 MM) FOR DIMENSION E2.

9. THESE SURFACES OF THE HEAT SLUG ARE NOT PART OF THE SOLDERABLE SURFACES AND MAY REMAIN UNPLATED.

10. HATCHING REPRESENTS THE EXPOSED AND SOLDERABLE AREA OF THE HEAT SLUG. DIMENSIONS D2 AND E3 REPRESENT THE VALUES BETWEEN THE TWO OPPOSITE POINTS ALONG THE EDGES OF EXPOSED AREA OF THE HEAT SLUG.

	INCH		MILLIMETER			INCH		MILLIMETER	
DIM	MIN	MAX	MIN	MAX	DIM	MIN	MAX	MIN	MAX
AA	.078	.082	1.98	2.08	L	.018	.024	0.46	0.61
A1	.001	.004	0.03	0.10	L1	.010 BSC		0.25 BSC	
A2	(.083)		(2.11)		b1	.193	.199	4.90	5.06
DD	.416	.424	10.57	10.77	c1	.007	.011	0.18	0.28
D1	.378	.382	9.60	9.70	e	2°	8°	2°	8°
D2	.290	–	7.37	–	aaa	.004		0.10	
D3	.016	.024	0.41	0.61	bbb	.008		0.20	
E	.316	.324	8.03	8.23					
E1	.238	.242	6.04	6.15					
E2	.066	.074	1.68	1.88					
E3	.150	–	3.81	–					
E4	.058	.066	1.47	1.68					
E5	.231	.235	5.87	5.97					

© NXP SEMICONDUCTORS N.V.
ALL RIGHTS RESERVED

MECHANICAL OUTLINE | PRINT VERSION NOT TO SCALE

TITLE: TO–270G–2

DOCUMENT NO: 98ASA99301D REV: D

STANDARD: JEDEC TO–270 BA

SOT1731–1 28 MAR 2016

PRODUCT DOCUMENTATION, SOFTWARE AND TOOLS

Refer to the following documents, software and tools to aid your design process.

Application Notes

- AN1907: Solder Reflow Attach Method for High Power RF Devices in Over-Molded Plastic Packages
- AN1955: Thermal Measurement Methodology of RF Power Amplifiers
- AN3263: Bolt Down Mounting Method for High Power RF Transistors and RFICs in Over-Molded Plastic Packages
- AN3789: Clamping of High Power RF Transistors and RFICs in Over-Molded Plastic Packages

Engineering Bulletins

- EB212: Using Data Sheet Impedances for RF LDMOS Devices
- EB38: Measuring the Intermodulation Distortion of Linear Amplifiers

Software

- Electromigration MTTF Calculator
- RF High Power Model
- .s2p File

Development Tools

- Printed Circuit Boards

For Software and Tools, do a Part Number search at http://www.nxp.com, and select the “Part Number” link. Go to the Software & Tools tab on the part’s Product Summary page to download the respective tool.

REVISION HISTORY

The following table summarizes revisions to this document.

Revision	Date	Description
0	June 2012	• Initial Release of Data Sheet
1	Dec. 2012	• Added part number MRFE6VS25GNR1, p. 1 • Added 1265A-03 (TO-270-2 Gull) package isometric, p. 1, and Mechanical Outline, p. 30-32 • Load Mismatch/Ruggedness tables: changed output power to input power to clarify the conditions used during test, p. 1, 3, 9, 22 • Figs. 17, 18 and 19, Intermodulation Distortion Products versus Output Power (1.8, 10, 30 MHz): corrected x-axis data to show Watts (PEP) measurement, p. 13 • Added 30-512 MHz Broadband Reference Circuit as follows: - Typical Performance table, p. 1 - Table 12, Broadband Performance, p. 15 - Table 13, Load Mismatch/Ruggedness, p. 15 - Fig. 21, Broadband Reference Circuit Component Layout, p. 16 - Table 14, Broadband Reference Circuit Component Designations and Values, p. 16 - Fig. 21a, Detailed View of Semi-flex Cables with Shields and #61 Multi-aperture Cores, p. 17 - Fig. 22, Broadband Reference Circuit Schematic, p. 17 - Table 15, Broadband Reference Circuit Microstrips, p. 17 - Fig. 23, Power Gain, CW Output Power and Drain Efficiency versus Frequency at a Constant Input Power, p. 18 - Fig. 24, CW Output Power versus Gate-Source Voltage at a Constant Input Power, P_{in} = 0.65 W, p. 18 - Fig. 25, CW Output Power versus Gate-Source Voltage at a Constant Input Power, P_{in} = 0.325 W, p. 18 - Fig. 26, CW Output Power versus Input Power, p. 19 - Fig. 27, Power Gain and Drain Efficiency versus CW Output Power, p. 19 - Fig. 28, Intermodulation Distortion Products versus Output Power - 30 MHz, p. 20 - Fig. 29, Intermodulation Distortion Products versus Output Power - 100 MHz, p. 20 - Fig. 30, Intermodulation Distortion Products versus Output Power - 512 MHz, p. 20 - Fig. 31, Broadband Series Equivalent Source and Load Impedance, p. 21
2	Mar. 2019	• Fig. 1, Pin Connections, corrected Drain (Pin 1) and Gate (Pin 2) to reflect correct pin numbers, p. 1 • Table 6, Ordering Information, added table, p. 3 • Package Outline Drawings: TO-270-2 package outline updated to Rev. R, pp. 27–29. TO-270G-2 package outline updated to Rev. D, pp. 30–32.

How to Reach Us:

Home Page:
nxp.com

Web Support:
nxp.com/support

Information in this document is provided solely to enable system and software implementers to use NXP products. There are no express or implied copyright licenses granted hereunder to design or fabricate any integrated circuits based on the information in this document. NXP reserves the right to make changes without further notice to any products herein.

NXP makes no warranty, representation, or guarantee regarding the suitability of its products for any particular purpose, nor does NXP assume any liability arising out of the application or use of any product or circuit, and specifically disclaims any and all liability, including without limitation consequential or incidental damages. “Typical” parameters that may be provided in NXP data sheets and/or specifications can and do vary in different applications, and actual performance may vary over time. All operating parameters, including “typicals,” must be validated for each customer application by customer’s technical experts. NXP does not convey any license under its patent rights nor the rights of others. NXP sells products pursuant to standard terms and conditions of sale, which can be found at the following address: nxp.com/SalesTermsandConditions.

NXP, the NXP logo, Freescale and the Freescale logo are trademarks of NXP B.V.
All other product or service names are the property of their respective owners.
© 2012, 2019 NXP B.V.

Document Number: MRFE6VS25N
Rev. 2, 03/2019