SMALL-OUTLINE SDRAM MODULE

MT16LSDF3264(L)H – 256MB
MT16LSDF6464(L)H – 512MB

For the latest data sheet, please refer to the Micron® Web site: www.micron.com/products/modules

Features

- PC100- and PC133-compliant, 144-pin, small-outline, dual in-line memory module (SODIMM)
- Utilizes 100 MHz and 133 MHz SDRAM components
- Unbuffered
- 256MB (32 Meg x 64) and 512MB (64 Meg x 64)
- Single +3.3V power supply
- Fully synchronous; all signals registered on positive edge of system clock
- Internal pipelined operation; column address can be changed every clock cycle
- Internal SDRAM banks for hiding row access/precharge
- Programmable burst lengths: 1, 2, 4, 8, or full page
- Auto precharge and auto refresh modes
- Self refresh mode: standard and low-power
- 256MB module: 64ms, 4,096-cycle refresh (15.625µs refresh interval); 512MB: 64ms, 8,192-cycle refresh (7.81µs refresh interval)
- LVTTL-compatible inputs and outputs
- Serial presence-detect (SPD)
- Gold edge connectors

Table 1: Timing Parameters

CL = CAS (READ) latency

MODULE MARKING	CLOCK FREQUENCY	ACCESS TIME		SETUP TIME	HOLD TIME
		CL = 2	CL = 3		
-13E	133 MHz	5.4ns	–	1.5ns	0.8ns
-133	133 MHz	–	5.4ns	1.5ns	0.8ns
-10E	100 MHz	6ns	–	2ns	1ns

Figure 1: 144-Pin SODIMM (MO-190)

PCB height: 1.25in (31.75mm)

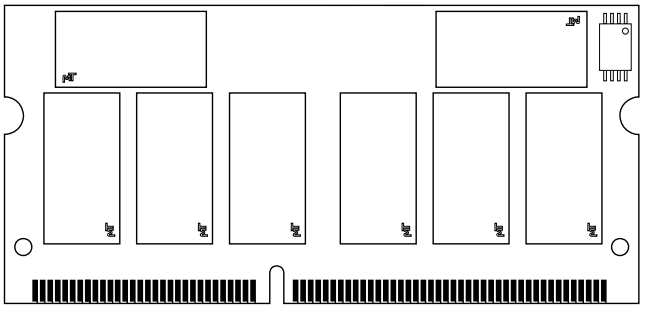

Options — Marking

- Self refresh current
  - Standard — None
  - Low power — L[1]
- Package
  - 144-pin SODIMM (standard) — G
  - 144-pin SODIMM (lead-free) — Y[1]
- Memory Clock/CL
  - 7.5ns (133 MHz)/CL = 2 — -13E
  - 7.5ns (133 MHz)/CL = 3 — -133
  - 10ns (100 MHz)/CL = 2 — -10E
- PCB
  - Height 1.25in (31.75mm) — See page 2 note

NOTE: 1. Contact Micron for product availability.

Table 2: Address Table

	256MB	512MB
Refresh count	4K	8K
Device banks	4 (BA0, BA1)	4 (BA0, BA1)
Device configuration	128Mb (16 Meg x 8)	256Mb (32 Meg x 8)
Row addressing	4K (A0–A11)	8K (A0–A12)
Column addressing	1K (A0–A9)	1K (A0–A9)
Module ranks	2 (S0#, S1#)	2 (S0#, S1#))

©2006 Micron Technology, Inc. All rights reserved.

PRODUCTS AND SPECIFICATIONS DISCUSSED HEREIN ARE SUBJECT TO CHANGE BY MICRON WITHOUT NOTICE.

Table 3: Part Numbers

PART NUMBER	MODULE DENSITY	CONFIGURATION	SYSTEM BUS SPEED
MT16LSDF3264(L)HG-13E_	256MB	32 Meg x 64	133 MHz
MT16LSDF3264(L)HY-13E_	256MB	32 Meg x 64	133 MHz
MT16LSDF3264(L)HG-133_	256MB	32 Meg x 64	133 MHz
MT16LSDF3264(L)HY-133_	256MB	32 Meg x 64	133 MHz
MT16LSDF3264(L)HG-10E_	256MB	32 Meg x 64	100 MHz
MT16LSDF3264(L)HY-10E_	256MB	32 Meg x 64	100 MHz
MT16LSDF6464(L)HG-13E_	512MB	64 Meg x 64	133 MHz
MT16LSDF6464(L)HY-13E_	512MB	64 Meg x 64	133 MHz
MT16LSDF6464(L)HG-133_	512MB	64 Meg x 64	133 MHz
MT16LSDF6464(L)HY-133_	512MB	64 Meg x 64	133 MHz
MT16LSDF6464(L)HG-10E_	512MB	64 Meg x 64	100 MHz
MT16LSDF6464(L)HY-10E_	512MB	64 Meg x 64	100 MHz

NOTE:

1. The designators for component and PCB revision are the last two characters of each part number Consult factory for current revision codes. Example: MT16LSDF32264(L)HG-133B1.

Micron Technology, Inc., reserves the right to change products or specifications without notice.
©2006 Micron Technology, Inc. All rights reserved.

Table 4: Pin Assignment (144-Pin SODIMM Front)

PIN	SYMBOL	PIN	SYMBOL	PIN	SYMBOL	PIN	SYMBOL
1	VSS	37	DQ8	73	NC	109	A9
3	DQ0	39	DQ9	75	VSS	111	A10
5	DQ1	41	DQ10	77	NC	113	VDD
7	DQ2	43	DQ11	79	NC	115	DQMB2
9	DQ3	45	VDD	81	VDD	117	DQMB3
11	VDD	47	DQ12	83	DQ16	119	VSS
13	DQ4	49	DQ13	85	DQ17	121	DQ24
15	DQ5	51	DQ14	87	DQ18	123	DQ25
17	DQ6	53	DQ15	89	DQ19	125	DQ26
19	DQ7	55	VSS	91	VSS	127	DQ27
21	VSS	57	NC	93	DQ20	129	VDD
23	DQMB0	59	NC	95	DQ21	131	DQ28
25	DQMB1	61	CK0	97	DQ22	133	DQ29
27	VDD	63	VDD	99	DQ23	135	DQ30
29	A0	65	RAS#	101	VDD	137	DQ31
31	A1	67	WE#	103	A6	139	VSS
33	A2	69	S0#	105	A8	141	SDA
35	VSS	71	S1#	107	VSS	143	VDD

Table 5: Pin Assignment (144-Pin SODIMM Back)

PIN	SYMBOL	PIN	SYMBOL	PIN	SYMBOL	PIN	SYMBOL
2	VSS	38	DQ40	74	CK1	110	BA1
4	DQ32	40	DQ41	76	VSS	112	A11
6	DQ33	42	DQ42	78	NC	114	VDD
8	DQ34	44	DQ43	80	NC	116	DQMB6
10	DQ35	46	VDD	82	VDD	118	DQMB7
12	VDD	48	DQ44	84	DQ48	120	VSS
14	DQ36	50	DQ45	86	DQ49	122	DQ56
16	DQ37	52	DQ46	88	DQ50	124	DQ57
18	DQ38	54	DQ47	90	DQ51	126	DQ58
20	DQ39	56	VSS	92	VSS	128	DQ59
22	VSS	58	NC	94	DQ52	130	VDD
24	DQMB4	60	NC	96	DQ53	132	DQ60
26	DQMB5	62	CKE0	98	DQ54	134	DQ61
28	VDD	64	VDD	100	DQ55	136	DQ62
30	A3	66	CAS#	102	VDD	138	DQ63
32	A4	68	CKE1	104	A7	140	VSS
34	A5	70	NC/A12[1]	106	BA0	142	SCL
36	VSS	72	NC	108	VSS	144	VDD

NOTE:
1. Pin 70 is No Connect for 256MB modules, or A12 for 512MB modules.

Figure 2: Pin Locations (144-Pin SODIMM)

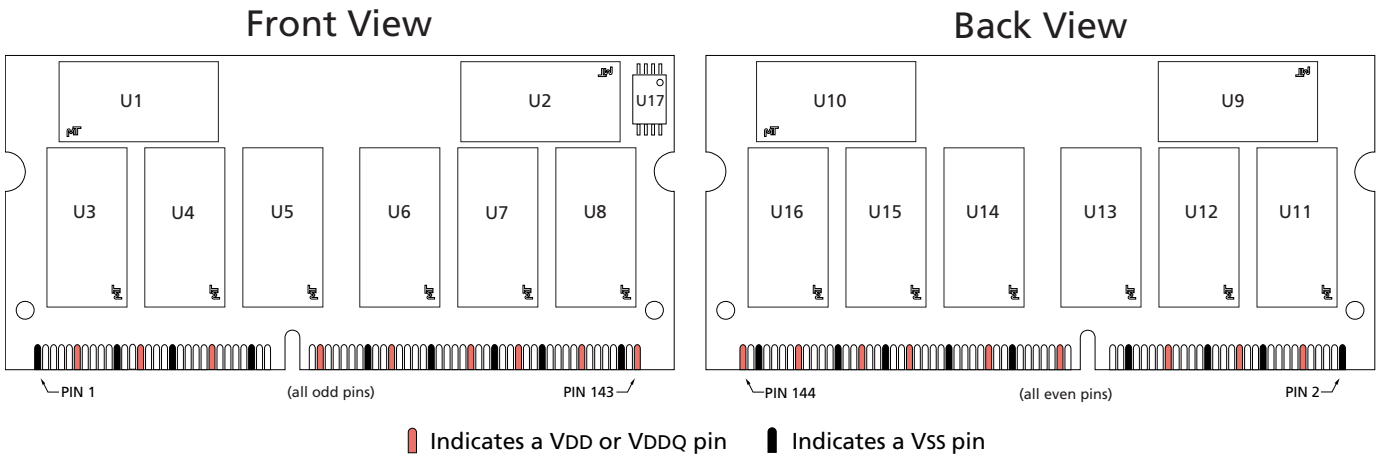

Micron Technology, Inc., reserves the right to change products or specifications without notice.
©2006 Micron Technology, Inc. All rights reserved.

Table 6: Pin Descriptions

Pin numbers may not correlate with symbols; refer to the Pin Assignment tables on page 3 for more information

PIN NUMBERS	SYMBOL	TYPE	DESCRIPTION
65, 66, 67	RAS#, CAS#, WE#	Input	Command inputs: RAS#, CAS#, and WE# (along with S#) define the command being entered.
61, 74	CK0, CK1	Input	Clock: CK is driven by the system clock. All SDRAM input signals are sampled on the positive edge of CK. CK also increments the internal burst counter and controls the output registers.
62, 68	CKE0, CKE1	Input	Clock enable: CKE activates (HIGH) and deactivates (LOW) the CK signal. Deactivating the clock provides PRECHARGE power-down and SELF REFRESH operation (all device banks idle), ACTIVE power-down (row ACTIVE in any device bank), or CLOCK SUSPEND operation (burst access in progress). CKE is synchronous except after the device enters power-down and self refresh modes, where CKE becomes asynchronous until after exiting the same mode. The input buffers, including CK, are disabled during power-down and self refresh modes, providing low standby power.
69, 71	S0#,S1#	Input	Chip select: S# enables (registered LOW) and disables (registered HIGH) the command decoder. All commands are masked when S# is registered HIGH. S# is considered part of the command code.
23, 24, 25, 26, 115, 116, 117, 118	DQMB0–DQMB7	Input	Input/output mask: DQMB is an input mask signal for write accesses and an output enable signal for read accesses. Input data is masked when DQMB is sampled HIGH during a WRITE cycle. The output buffers are placed in a High-Z state (two-clock latency) when DQMB is sampled HIGH during a READ cycle.
106, 110	BA0, BA1	Input	Bank address: BA0 and BA1 define to which device bank the ACTIVE, READ, WRITE, or PRECHARGE command is being applied.
29, 30, 31, 32, 33, 34, 70 (512MB), 103, 104, 105, 109, 111, 112	A0–A11 (256MB) A0–A12 (512MB)	Input	Address inputs: Provide the row address for ACTIVE commands and the column address and auto precharge bit (A10) for READ/WRITE commands, to select one location out of the memory array in the respective device bank. A10 sampled during a PRECHARGE command determines whether the PRECHARGE applies to one device bank (A10 LOW, device bank selected by BA0, BA1) or all device banks (A10 HIGH). The address inputs also provide the op-code during a MODE REGISTER SET command.
142	SCL	Input	Serial clock for presence-detect: scl is used to synchronize the presence-detect data transfer to and from the module.
141	SDA	Input/ Output	Serial presence-detect data: sda is a bidirectional pin used to transfer addresses and data into and data out of the presence-detect portion of the module.
3, 4, 5, 6, 7, 8, 9, 10, 13, 14, 15, 16, 17, 18,19, 20, 37, 38, 39, 40, 41, 42, 43, 44, 47, 48, 49, 50, 51, 52, 53, 54, 83, 84, 85, 86, 87, 88, 89, 90, 93, 94, 95, 96, 97, 98, 99, 100, 121, 122, 123, 124, 125, 126, 127, 128, 131, 132, 133, 134, 135, 136, 137, 138	DQ0–DQ63	Input/ Output	Data I/O: Data bus.

Micron Technology, Inc., reserves the right to change products or specifications without notice.
©2006 Micron Technology, Inc. All rights reserved.

Table 6: Pin Descriptions (Continued)

Pin numbers may not correlate with symbols; refer to the Pin Assignment tables on page 3 for more information

PIN NUMBERS	SYMBOL	TYPE	DESCRIPTION
11, 12, 27, 28, 45, 46, 63, 64, 81, 82, 101, 102, 113, 114, 129, 130, 143, 144	V_{DD}	Supply	Power supply: +3.3V ±0.3V.
1, 21, 35, 55, 75, 91, 107, 119, 139, 2, 22, 36, 56, 76, 92, 108, 120, 140	V_{SS}	Supply	Ground.
57, 58, 59, 60, 70 (256MB), 72, 73, 77, 78, 79, 80	NC	–	Not connected: These pins should be left unconnected.

Micron Technology, Inc., reserves the right to change products or specifications without notice.
©2006 Micron Technology, Inc. All rights reserved.

Figure 3: Functional Block Diagram

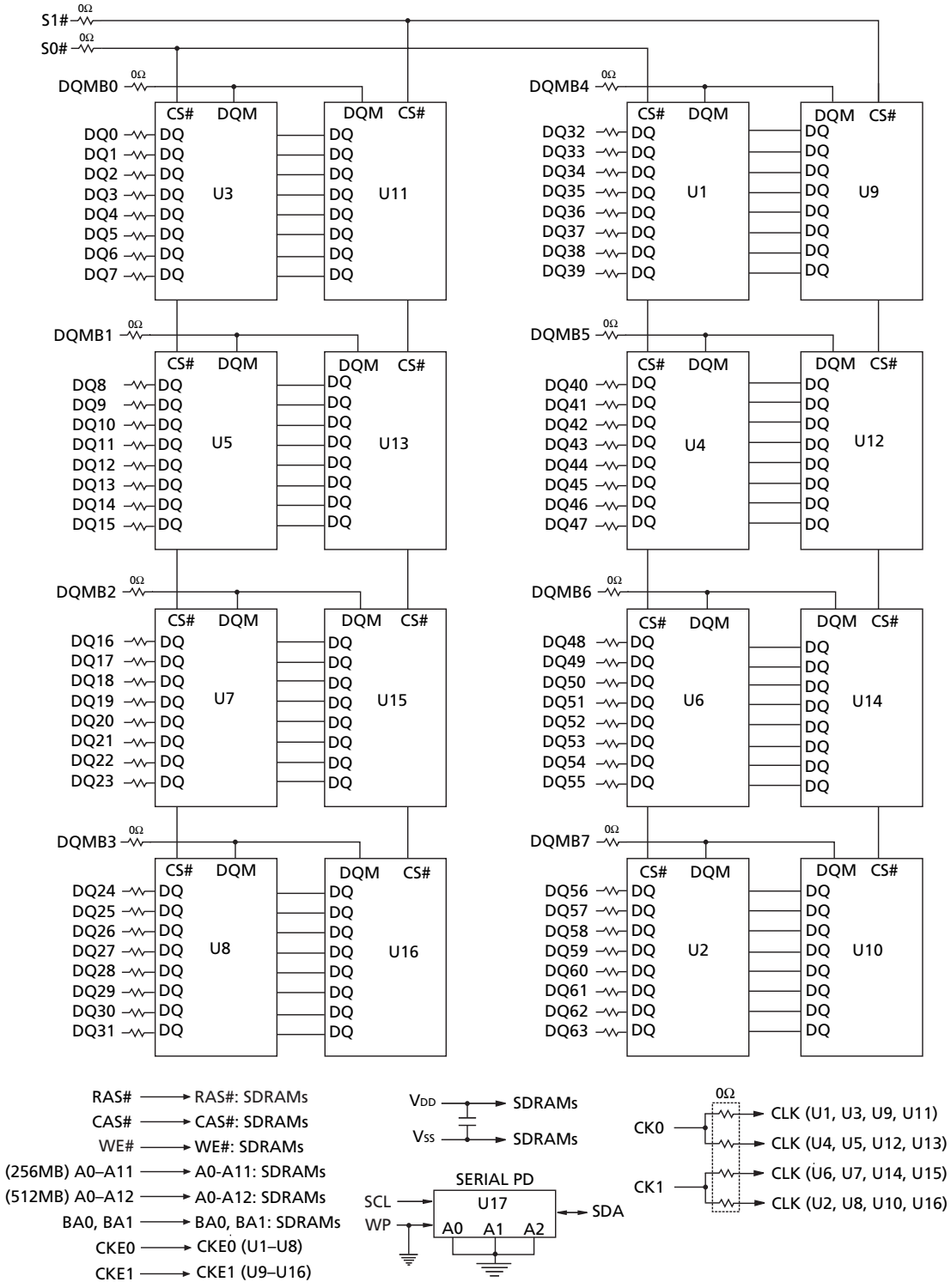

NOTE:

1. All resistor values are 10Ω unless otherwise specified.
2. Per industry standard, Micron utilizes various component speed grades as referenced in the module part numbering guide at www.micron.com/support/numbering.html.

Standard modules use the following SDRAM devices:
MT48LC16M8A2FB (256MB); MT48LC32M8A2FB (512MB)

Lead-free modules use the following SDRAM devices:
MT48LC16M8A2BB (256MB); MT48LC32M8A2BB (512MB)

Micron Technology, Inc., reserves the right to change products or specifications without notice.
©2006 Micron Technology, Inc. All rights reserved.

General Description

The MT16LSDF3264(L)H and MT16LSDF6464(L)H are high-speed CMOS, dynamic random-access 256MB and 512MB unbuffered memory modules, organized in x64 configurations. These modules use internally configured quad-bank SDRAMs with a synchronous interface (all signals are registered on the positive edge of the clock signal CK).

Read and write accesses to the SDRAM modules are burst oriented; accesses start at a selected location and continue for a programmed number of locations in a programmed sequence. Accesses begin with the registration of an ACTIVE command, which is then followed by a READ or WRITE command. The address bits registered coincident with the ACTIVE command are used to select the device bank and row to be accessed (BA0, BA1 select the device bank, A0–A11 [256MB] or A0–A12 [512MB] select the device row). The address bits A0–A9 (for both 256MB and 512MB modules) registered coincident with the READ or WRITE command are used to select the starting device column location for the burst access.

These modules provide for programmable READ or WRITE burst lengths of 1, 2, 4, or 8 locations, or the full page, with a burst terminate option. An auto precharge function may be enabled to provide a self-timed row precharge that is initiated at the end of the burst sequence.

These modules use an internal pipelined architecture to achieve high-speed operation. This architecture is compatible with the 2*n* rule of prefetch architectures, but it also enables the column address to be changed on every clock cycle to achieve a high-speed, fully random access. Precharging one device bank while accessing one of the other three device banks will hide the precharge cycles and provide seamless, high-speed, random-access operation.

These modules are designed to operate in 3.3V, low-power memory systems. An auto refresh mode is provided, along with a power-saving, power-down mode. All inputs and outputs are LVTTL-compatible.

SDRAM modules offer substantial advances in DRAM operating performance, including the ability to synchronously burst data at a fast data rate with automatic column-address generation, the ability to interleave between internal banks in order to hide precharge time and the capability to randomly change column addresses on each clock cycle during a burst access. For more information regarding SDRAM operation, refer to the 128Mb or 256Mb SDRAM component data sheets.

Serial Presence Detect Operation

These modules incorporate serial presence-detect (SPD). The SPD function is implemented using a 2,048-bit EEPROM. This nonvolatile storage device contains 256 bytes. The first 128 bytes are programmed by Micron to identify the module type, SDRAM characteristics and module timing parameters. The remaining 128 bytes of storage are available for use by the customer. System READ/WRITE operations between the master (system logic) and the slave EEPROM device (DIMM) occur via a standard I^2C bus using the DIMM's SCL (clock) and SDA (data) signals, together with SA[2:0], which provide eight unique DIMM/EEPROM addresses. Write protect (WP) is tied to ground on the module, permanently disabling hardware write protect.

Initialization

SDRAMs must be powered up and initialized in a predefined manner. Operational procedures other than those specified may result in undefined operation. When power is applied to V_{DD} and $V_{DD}Q$ (simultaneously), and the clock is stable (stable clock is defined as a signal cycling within timing constraints specified for the clock pin), the SDRAM requires a 100µs delay prior to issuing any command other than a COMMAND INHIBIT or NOP. Starting at some point during this 100µs period and continuing at least through the end of this period, COMMAND INHIBIT or NOP commands should be applied.

When the 100µs delay has been satisfied with at least one COMMAND INHIBIT or NOP command having been applied, a PRECHARGE command should be applied. All device banks must then be precharged, thereby placing the device in the all banks idle state.

When in the idle state, two AUTO REFRESH cycles must be performed. After the AUTO REFRESH cycles are complete, the SDRAM is ready for mode register programming. Because the mode register will power up in an unknown state, it should be loaded prior to applying any operational command.

Mode Register Definition

The mode register is used to define the specific mode of operation of the SDRAM. This definition includes the selection of a burst length, a burst type, a CL, an operating mode, and a write burst mode, as shown in Figure 4 on page 8. The mode register is programmed via the LOAD MODE REGISTER command and will retain the stored information until it is programmed again or the device loses power.

Micron Technology, Inc., reserves the right to change products or specifications without notice.
©2006 Micron Technology, Inc. All rights reserved.

Mode register bits M0–M2 specify the burst length, M3 specifies the type of burst (sequential or interleaved), M4–M6 specify the CL, M7 and M8 specify the operating mode, M9 specifies the write burst mode, and M10 and M11 are reserved for future use. For the 256MB and 512MB, M12 (A12) is undefined, but should be driven LOW during loading of the mode register.

The mode register must be loaded when all device banks are idle, and the controller must wait the specified time before initiating the subsequent operation. Violating either of these requirements will result in unspecified operation.

Burst Length

Read and write accesses to the SDRAM are burst oriented, with the burst length being programmable, as shown in Figure 4. The burst length determines the maximum number of column locations that can be accessed for a given READ or WRITE command. Burst lengths of 1, 2, 4, or 8 locations are available for both the sequential and the interleaved burst types, and a full-page burst is available for the sequential type. The full-page burst is used in conjunction with the BURST TERMINATE command to generate arbitrary burst lengths.

Reserved states should not be used, as unknown operation or incompatibility with future versions may result.

When a READ or WRITE command is issued, a block of columns equal to the burst length is effectively selected. All accesses for that burst take place within this block, meaning that the burst will wrap within the block if a boundary is reached, as shown in Table 7 on page 9. The block is uniquely selected by A1–A9 when the burst length is set to two; by A2–A9 when the burst length is set to four; and by A3–A9 when the burst length is set to eight. The remaining (least significant) address bit(s) is (are) used to select the starting location within the block. Full-page bursts wrap within the page if the boundary is reached, as shown in Table 7 on page 9.

Figure 4: Mode Register Definition Diagram

256MB Module

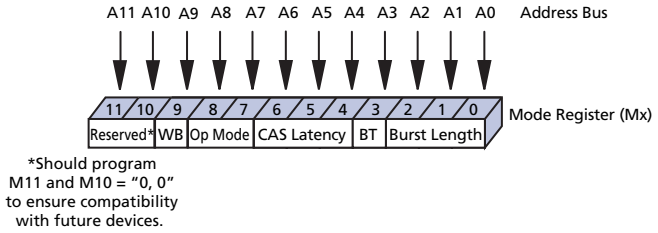

512MB Module

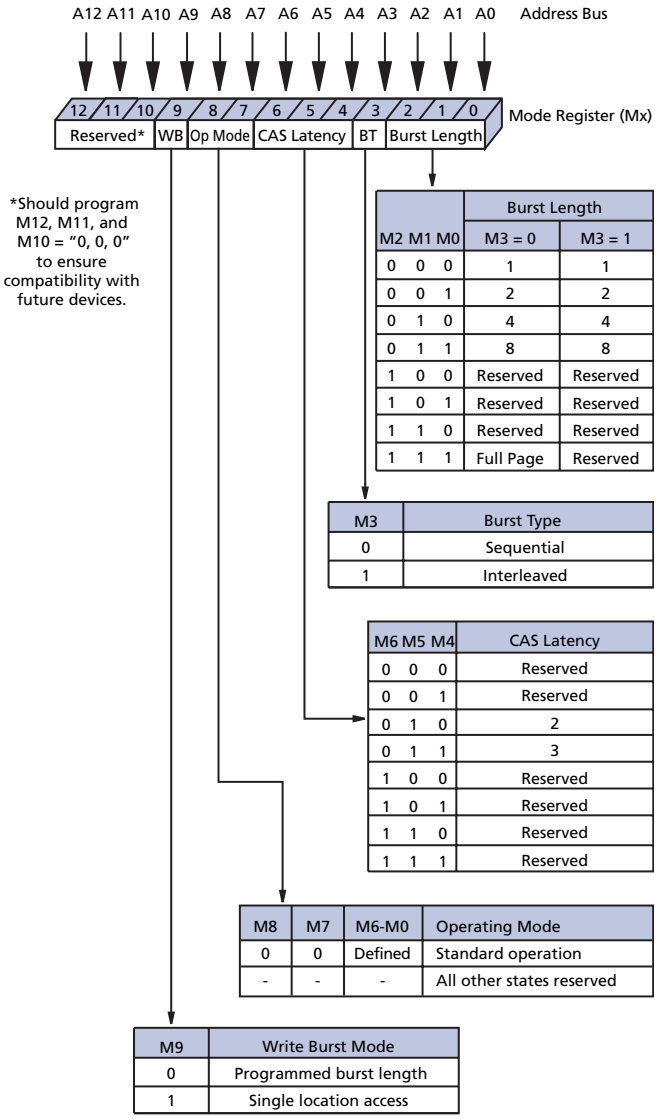

	Burst Length	
M2 M1 M0	M3 = 0	M3 = 1
0 0 0	1	1
0 0 1	2	2
0 1 0	4	4
0 1 1	8	8
1 0 0	Reserved	Reserved
1 0 1	Reserved	Reserved
1 1 0	Reserved	Reserved
1 1 1	Full Page	Reserved

M3	Burst Type
0	Sequential
1	Interleaved

M6 M5 M4	CAS Latency
0 0 0	Reserved
0 0 1	Reserved
0 1 0	2
0 1 1	3
1 0 0	Reserved
1 0 1	Reserved
1 1 0	Reserved
1 1 1	Reserved

M8	M7	M6-M0	Operating Mode
0	0	Defined	Standard operation
-	-	-	All other states reserved

M9	Write Burst Mode
0	Programmed burst length
1	Single location access

Micron Technology, Inc., reserves the right to change products or specifications without notice.
©2006 Micron Technology, Inc. All rights reserved.

Table 7: Burst Definition Table

BURST LENGTH	STARTING COLUMN ADDRESS			ORDER OF ACCESSES WITHIN A BURST	
				TYPE = SEQUENTIAL	TYPE = INTERLEAVED
2			A0		
			0	0-1	0-1
			1	1-0	1-0
4		A1	A0		
		0	0	0-1-2-3	0-1-2-3
		0	1	1-2-3-0	1-0-3-2
		1	0	2-3-0-1	2-3-0-1
		1	1	3-0-1-2	3-2-1-0
8	A2	A1	A0		
	0	0	0	0-1-2-3-4-5-6-7	0-1-2-3-4-5-6-7
	0	0	1	1-2-3-4-5-6-7-0	1-0-3-2-5-4-7-6
	0	1	0	2-3-4-5-6-7-0-1	2-3-0-1-6-7-4-5
	0	1	1	3-4-5-6-7-0-1-2	3-2-1-0-7-6-5-4
	1	0	0	4-5-6-7-0-1-2-3	4-5-6-7-0-1-2-3
	1	0	1	5-6-7-0-1-2-3-4	5-4-7-6-1-0-3-2
	1	1	0	6-7-0-1-2-3-4-5	6-7-4-5-2-3-0-1
	1	1	1	7-0-1-2-3-4-5-6	7-6-5-4-3-2-1-0
Full Page (y)	*n* = A0-A9 (location 0-y)			*Cn*, *Cn* + 1, *Cn* + 2 *Cn* + 3, *Cn* + 4... ...*Cn* - 1, *Cn*...	Not supported

NOTE:

1. For full-page accesses: y = 1,024 (both 256MB and 512MB modules)
2. For a burst length of two, A1–A9 select the block-of-two burst; A0 selects the starting column within the block.
3. For a burst length of four, A2–A9 select the block-of-four burst; A0–A1 select the starting column within the block.
4. For a burst length of eight, A3–A9 select the block-of-eight burst; A0–A2 select the starting column within the block.
5. For a full-page burst, the full row is selected and A0–A9 select the starting column.
6. Whenever a boundary of the block is reached within a given sequence above, the following access wraps within the block.
7. For a burst length of one, A0–A9 select the unique column to be accessed, and mode register bit M3 is ignored.

Figure 5: CL Diagram

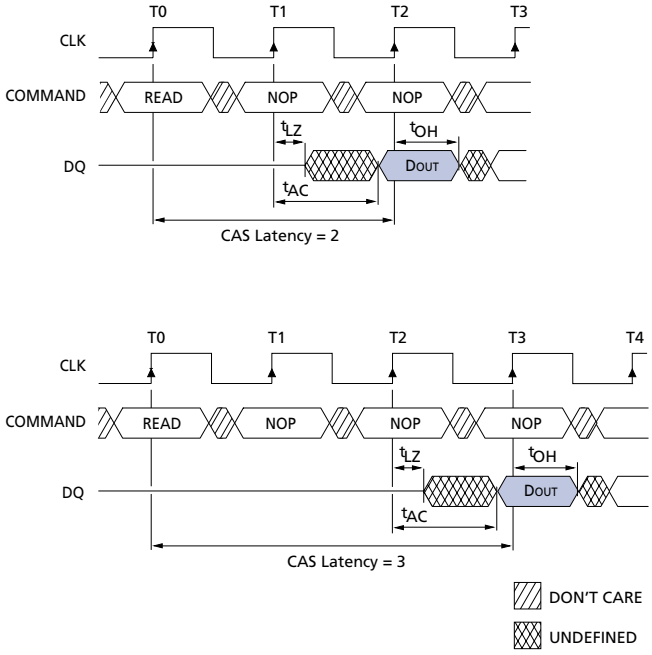

Burst Type

Accesses within a given burst may be programmed to be either sequential or interleaved; this is referred to as the burst type and is selected via bit M3.

The ordering of accesses within a burst is determined by the burst length, the burst type, and the starting column address, as shown in Table 7.

CAS Latency (CL)

CL is the delay, in clock cycles, between the registration of a READ command and the availability of the first piece of output data. The latency can be set to two or three clocks.

If a READ command is registered at clock edge *n*, and the latency is m clocks, the data will be available by clock edge *n* + *m*. The DQ will start driving as a result of the clock edge one cycle earlier (*n* + *m* - 1), and provided that the relevant access times are met, the data will be valid by clock edge *n* + *m*. For example, assuming that the clock cycle time is such that all relevant access times are met, if a READ command is registered at T0 and the latency is programmed to two clocks, the DQ will start driving after T1 and the data will be valid by T2, as shown in Figure 4 on page 8. Table 8 on page 10 indicates the operating frequencies at which each CL setting can be used.

Reserved states should not be used as unknown operation or incompatibility with future versions may result.

Micron Technology, Inc., reserves the right to change products or specifications without notice.
©2006 Micron Technology, Inc. All rights reserved.

Operating Mode

The normal operating mode is selected by setting M7 and M8 to zero; the other combinations of values for M7 and M8 are reserved for future use and/or test modes. The programmed burst length applies to both READ and WRITE bursts.

Test modes and reserved states should not be used because unknown operation or incompatibility with future versions may result.

Write Burst Mode

When M9 = 0, the burst length programmed via M0-M2 applies to both READ and WRITE bursts; when M9 = 1, the programmed burst length applies to READ bursts, but write accesses are single-location (non-burst) accesses.

Table 8: CL Table

	ALLOWABLE OPERATING CLOCK FREQUENCY (MHz)	
SPEED	CL = 2	CL = 3
-13E	≤ 133	< 143
-133	≤ 100	< 133
-10E	≤ 100	≤ NA

Micron Technology, Inc., reserves the right to change products or specifications without notice.
©2006 Micron Technology, Inc. All rights reserved.

Commands

The Truth Table provides a quick reference of available commands. This is followed by written description of each command. For a more detailed description of commands and operations, refer to the 128Mb or 256Mb SDRAM component data sheet.

Table 9: Truth Table – SDRAM Commands and DQMB Operation

CKE is HIGH for all commands shown except SELF REFRESH

NAME (FUNCTION)	CS#	RAS#	CAS#	WE#	DQMB	ADDR	DQ	NOTES
COMMAND INHIBIT (NOP)	H	X	X	X	X	X	X	
NO OPERATION (NOP)	L	H	H	H	X	X	X	
ACTIVE (select bank and activate row)	L	L	H	H	X	Bank/Row	X	1
READ (select bank and column, and start READ burst)	L	H	L	H	L/H[8]	Bank/Col	X	2
WRITE (select bank and column, and start WRITE burst)	L	H	L	L	L/H[8]	Bank/Col	Valid	2
BURST TERMINATE	L	H	H	L	X	X	Active	
PRECHARGE (deactivate row in bank or banks)	L	L	H	L	X	Code	X	3
AUTO REFRESH or SELF REFRESH (enter self refresh mode)	L	L	L	H	X	X	X	4, 5
LOAD MODE REGISTER	L	L	L	L	X	Op-code	X	6
Write enable/output enable	–	–	–	–	L	–	Active	7
Write inhibit/output High-Z	–	–	–	–	H	–	High-Z	7

NOTE:

1. A0–A11 (256MB) or A0–A12 (512MB) provide device row address, and BA0, BA1 determine which device bank is made active.
2. A0–A9 (256MB and 512MB) provide device column address; A10 HIGH enables the auto precharge feature (nonpersistent), while A10 LOW disables the auto precharge feature; BA0, BA1 determine which device bank is being read from or written to.
3. A10 LOW: BA0, BA1 determine which device bank is being precharged. A10 HIGH: all device banks are precharged and BA0, BA1 are "Don't Care."
4. This command is AUTO REFRESH if CKE is HIGH, SELF REFRESH if CKE is LOW.
5. Internal refresh counter controls row addressing; all inputs and I/Os are "Don't Care" except for CKE.
6. A0–A11 define the op-code written to the mode register; for the 256MB and 512MB, A12 should be driven low.
7. Activates or deactivates the DQs during WRITEs (zero-clock delay) and READs (two-clock delay).

Micron Technology, Inc., reserves the right to change products or specifications without notice.
©2006 Micron Technology, Inc. All rights reserved.

Absolute Maximum Ratings

Stresses greater than those listed may cause permanent damage to the device. This is a stress rating only, and functional operation of the device at these or any other conditions above those indicated in the operational sections of this specification is not implied. Exposure to absolute maximum rating conditions for extended periods may affect reliability.

Voltage on V_{DD} Supply,
Relative to V_{SS} . . . . . -1V to +4.6V
Voltage on Inputs, NC or I/O Pins
Relative to V_{SS} . . . . . -1V to +4.6V

Operating Temperature,
T_{OPR} (Commercial - ambient) . . . . . 0°C to +65°C
Storage Temperature (plastic) . . . . . -55°C to +125°C
Short Circuit Output Current 50mA

Table 10: DC Electrical Characteristics and Operating Conditions

Notes: 1, 5, 6; notes appear on page 16; V_{DD}, $V_{DD}Q$ = +3.3V ±0.3V

PARAMETER/CONDITION		SYMBOL	MIN	MAX	UNITS	NOTES
Supply voltage		V_{DD}, $V_{DD}Q$	3	3.6	V	
Input high voltage: Logic 1; All inputs		V_{IH}	2	V_{DD} + 0.3	V	22
Input low voltage: Logic 0; All inputs		V_{IL}	–0.3	0.8	V	22
Input leakage current: Any input 0V ≤ V_{IN} ≤ V_{DD} (All other pins not under test = 0V)	Command and Address Inputs	I_I	–80	80	µA	33
	CK, CKE, S#		–40	40		
	DQMB		–10	10		
Output leakage current: DQ pins are disabled; 0V ≤ V_{OUT} ≤ $V_{DD}Q$	DQ	I_{OZ}	–10	10	µA	33
Output levels: Output High Voltage (I_{OUT} = -4mA)		V_{OH}	2.4	–	V	
Output Low Voltage (I_{OUT} = 4mA)		V_{OL}	–	0.4	V	

Table 11: I_{DD} Specifications and Conditions – 256MB

Notes: 1, 5, 6, 11, 13; SDRAM components only; notes appear on page 16; V_{DD}, $V_{DD}Q$ = +3.3V ±0.3V

			MAX				
PARAMETER/CONDITION		SYMBOL	-13E	-133	-10E	UNITS	NOTES
Operating current: Active mode; Burst = 2; READ or WRITE; ^{t}RC = ^{t}RC (MIN)		$I_{DD}1^{a}$	1,296	1,216	1,136	mA	3, 17, 19, 32
Standby current: Power-down mode; All device banks idle; CKE = LOW		$I_{DD}2^{b}$	32	32	32	mA	32
Standby current: Active mode; CKE = HIGH; CS# = HIGH; All device banks active after ^{t}RCD met; No accesses in progress		$I_{DD}3^{a}$	416	416	336	mA	3, 12, 19, 32
Operating current: Burst mode; Continuous burst; READ or WRITE; All device banks active		$I_{DD}4^{a}$	1,336	1,216	1,136	mA	3, 18, 19, 32
Auto refresh current CKE = HIGH; S# = HIGH	^{t}RFC = ^{t}RFC (MIN)	$I_{DD}5^{b}$	5,280	4,960	4,320	mA	3, 12, 18, 19, 32,30
	^{t}RFC = 15.625µs	$I_{DD}6^{b}$	48	48	48	mA	
Self refresh current: CKE ≤ 0.2V	Standard	$I_{DD}7^{b}$	32	32	32	mA	4
	Low power (L)	$I_{DD}7^{b}$	16	16	16	mA	

a - Value calculated as one module rank in this operating condition, and all other ranks in power-down mode.
b - Value calculated reflects all module ranks in this operation condition.

Micron Technology, Inc., reserves the right to change products or specifications without notice.
©2006 Micron Technology, Inc. All rights reserved.

Table 12: IDD Specifications and Conditions – 512MB

Notes: 1, 5, 6, 11, 13; SDRAM components only; notes appear on page 16; VDD, VDDQ = +3.3V ±0.3V

			MAX				
PARAMETER/CONDITION		**SYMBOL**	**-13E**	**-133**	**-10E**	**UNITS**	**NOTES**
Operating current: Active mode; Burst = 2; READ or WRITE; ^{t}RC = ^{t}RC (MIN)		$I_{DD}1$[a]	1,096	1,016	1,016	mA	3, 17,19, 32
Standby current: Power-down mode; All device banks idle; CKE = LOW		$I_{DD}2$[b]	32	32	32	mA	32
STANDBY CURRENT: Active mode; CKE = HIGH; CS# = HIGH; All device banks active after ^{t}RCD met; No accesses in progress		$I_{DD}3$[a]	336	336	336	mA	3, 12, 19, 32
OPERATING CURRENT: Burst mode; Continuous burst; READ or WRITE; All device banks active		$I_{DD}4$[a]	1,096	1,096	1,096	mA	3, 18, 19, 32
Auto refresh current CKE = HIGH; S# = HIGH	^{t}RFC = ^{t}RFC (MIN)	$I_{DD}5$[b]	4,560	4,320	4,320	mA	3, 12, 18, 19, 32,30
	^{t}RFC = 7.8125µs	$I_{DD}6$[b]	56	56	56	mA	
Self refresh current: CKE < 0.2V	Standard	$I_{DD}7$[b]	40	40	40	mA	4
	Low power (L)	$I_{DD}7$[b]	24	24	24	mA	

a - Value calculated as one module rank in this operating condition, and all other ranks in power-down mode.
b - Value calculated reflects all module ranks in this operation condition.

Table 13: Capacitance

Note 2; notes appear on page 16

PARAMETER	**SYMBOL**	**MIN**	**MAX**	**UNITS**
Input capacitance: Address and command	C_{I1}	40	60.8	pF
Input capacitance: CK	C_{I2}	20	28	pF
Input capacitance: CKE, S#	C_{I3}	20	30.4	pF
Input capacitance: DQMB	C_{I4}	5	7.6	pF
Input/output capacitance: DQ	C_{IO}	8	12	pF

Micron Technology, Inc., reserves the right to change products or specifications without notice.
©2006 Micron Technology, Inc. All rights reserved.

Table 14: Electrical Characteristics and Recommended AC Operating Conditions

Notes: 5, 6, 8, 9, 11, 31; notes appear on page 16; comply with PC100 and PC133 specifications, based on SDRAM device

AC CHARACTERISTICS			-13E		-133		-10E			
PARAMETER		SYMBOL	MIN	MAX	MIN	MAX	MIN	MAX	UNITS	NOTES
Access time from CLK (positive edge)	CL = 3	$^tAC(3)$		5.4		5.4		6	ns	27
	CL = 2	$^tAC(2)$		5.4		6		6	ns	
Address hold time		^tAH	0.8		0.8		1		ns	
Address setup time		^tAS	1.5		1.5		2		ns	
CLK high-level width		^tCH	2.5		2.5		3		ns	
CLK low-level width		^tCL	2.5		2.5		3		ns	
Clock cycle time	CL = 3	$^tCK(3)$	7		7.5		8		ns	23
	CL = 2	$^tCK(2)$	7.5		10		10		ns	23
CKE hold time		^tCKH	0.8		0.8		1		ns	
CKE setup time		^tCKS	1.5		1.5		2		ns	
CS#, RAS#, CAS#, WE#, DQM hold time		^tCMH	0.8		0.8		1		ns	
CS#, RAS#, CAS#, WE#, DQM setup time		^tCMS	1.5		1.5		2		ns	
Data-in hold time		^tDH	0.8		0.8		1		ns	
Data-in setup time		^tDS	1.5		1.5		2		ns	
Data-out High-Z time	CL = 3	$^tHZ(3)$		5.4		5.4		6	ns	10
	CL = 2	$^tHZ(2)$		5.4		6		6	ns	10
Data-out Low-Z time		^tLZ	1		1		1		ns	
Data-out hold time (load)		^tOH	3		3		3		ns	
Data-out hold time (no load)		^tOHN	1.8		1.8		1.8		ns	28
ACTIVE-to-PRECHARGE command		^tRAS	37	120,000	44	120,000	50	120,000	ns	32
ACTIVE-to-ACTIVE command period		^tRC	60		66		70		ns	
ACTIVE-to-READ or WRITE delay		^tRCD	15		20		20		ns	
Refresh period		^tREF		64		64		64	ms	
AUTO REFRESH period		^tRFC	66		66		70		ns	
PRECHARGE command period		^tRP	15		20		20		ns	
ACTIVE bank *a* to ACTIVE bank *b* command		^tRRD	14		15		20		ns	
Transition time		^tT	0.3	1.2	0.3	1.2	0.3	1.2	ns	7
WRITE recovery time		^tWR	1 CLK + 7ns		1 CLK + 7.5ns		1 CLK + 7ns		ns	24
			14		15		15		ns	25
Exit SELF REFRESH to ACTIVE command		^tXSR	67		75		80		ns	20

Micron Technology, Inc., reserves the right to change products or specifications without notice.
©2006 Micron Technology, Inc. All rights reserved.

Table 15: AC Functional Characteristics

Notes: 5, 6, 7, 8, 9, 11, 31; notes appear on page 16; comply with PC100 and PC133 specifications, based on SDRAM device

PARAMETER		SYMBOL	-13E	-133	-10E	UNITS	NOTES
READ/WRITE command to READ/WRITE command		^{t}CCD	1	1	1	^{t}CK	17
CKE to clock disable or power-down entry mode		$^{t}CKED$	1	1	1	^{t}CK	14
CKE to clock enable or power-down exit setup mode		^{t}PED	1	1	1	^{t}CK	14
DQM to input data delay		^{t}DQD	0	0	0	^{t}CK	17
DQM to data mask during WRITEs		^{t}DQM	0	0	0	^{t}CK	17
DQM to data High-Z during READs		^{t}DQZ	2	2	2	^{t}CK	17
WRITE command to input data delay		^{t}DWD	0	0	0	^{t}CK	17
Data-in to ACTIVE command		^{t}DAL	4	5	4	^{t}CK	15, 21
Data-in to PRECHARGE command		^{t}DPL	2	2	2	^{t}CK	16, 21
Last data-in to burst STOP command		^{t}BDL	1	1	1	^{t}CK	17
Last data-in to new READ/WRITE command		^{t}CDL	1	1	1	^{t}CK	17
Last data-in to PRECHARGE command		^{t}RDL	2	2	2	^{t}CK	16, 21
LOAD MODE REGISTER command to ACTIVE or REFRESH command		^{t}MRD	2	2	2	^{t}CK	26
Data-out to High-Z from PRECHARGE command	CL = 3	$^{t}ROH(3)$	3	3	3	^{t}CK	17
	CL = 2	$^{t}ROH(2)$	2	2	2	^{t}CK	17

Micron Technology, Inc., reserves the right to change products or specifications without notice.
©2006 Micron Technology, Inc. All rights reserved.

Notes

1. All voltages referenced to V_{SS}.
2. This parameter is sampled. V_{DD}, $V_{DD}Q$ = +3.3V; f = 1 MHz, T_A = 25°C; pin under test biased at 1.4V.
3. I_{DD} is dependent on output loading and cycle rates. Specified values are obtained with minimum cycle time and the outputs open.
4. Enables on-chip refresh and address counters.
5. The minimum specifications are used only to indicate cycle time at which proper operation over the full temperature range is ensured (0°C ≤ T_A ≤ +70°C).
6. An initial pause of 100µs is required after power-up, followed by two AUTO REFRESH commands, before proper device operation is ensured. (V_{DD} and $V_{DD}Q$ must be powered up simultaneously. V_{SS} and $V_{SS}Q$ must be at same potential.) The two AUTO REFRESH-command wake-ups should be repeated any time the ^{t}REF refresh requirement is exceeded.
7. AC characteristics assume ^{t}T = 1ns.
8. In addition to meeting the transition rate specification, the clock and CKE must transit between V_{IH} and V_{IL} (or between V_{IL} and V_{IH}) in a monotonic manner.
9. Outputs measured at 1.5V with equivalent load:

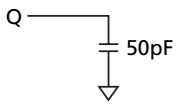

10. ^{t}HZ defines the time at which the output achieves the open circuit condition; it is not a reference to V_{OH} or V_{OL}. The last valid data element will meet ^{t}OH before going High-Z.
11. AC timing and I_{DD} tests have V_{IL} = 0V and V_{IH} = 3V, with timing referenced to 1.5V crossover point. If the input transition time is longer than 1ns, then the timing is referenced at V_{IL} (MAX) and V_{IH} (MIN) and no longer at the 1.5V crossover point.
12. Other input signals can change no more than once every two clocks and are otherwise at valid V_{IH} or V_{IL} levels.
13. I_{DD} specifications are tested after the device is properly initialized.
14. Timing actually specified by ^{t}CKS; clock(s) specified as a reference only at minimum cycle rate.
15. Timing actually specified by ^{t}WR plus ^{t}RP; clock(s) specified as a reference only at minimum cycle rate.
16. Timing actually specified by ^{t}WR.
17. Required clocks are specified by JEDEC functionality and are not dependent on any timing parameter.
18. The I_{DD} current will increase or decrease proportionally according to the amount of frequency alteration for the test condition.
19. Address transitions average one transition every two clocks.
20. CLK must be toggled a minimum of two times during this period.
21. Based on ^{t}CK = 10ns for -10E, and ^{t}CK = 7.5ns for -133 and -13E.
22. V_{IH} overshoot: V_{IH} (MAX) = $V_{DD}Q$ + 2V for a pulse width ≤ 3ns, and the pulse width cannot be greater than one third of the cycle rate. V_{IL} undershoot: V_{IL} (MIN) = -2V for a pulse width ≤ 3ns.
23. The clock frequency must remain constant (stable clock is defined as a signal cycling within timing constraints specified for the clock pin) during access or precharge states (READ, WRITE, including ^{t}WR, and PRECHARGE commands). CKE may be used to reduce the data rate.
24. Auto precharge mode only. The precharge time (^{t}RP) begins at 7ns for -13E; 7.5ns for -133 and 7ns for -10E after the first clock delay, after the last WRITE is executed. May not exceed limit set for precharge mode.
25. Precharge mode only.
26. JEDEC and PC100 specify three clocks.
27. ^{t}AC for -133/-13E at CL = 3 with no load is 4.6ns and is guaranteed by design.
28. Parameter guaranteed by design.
29. For -10E, CL = 2 and ^{t}CK = 10ns; for -133, CL = 3 and ^{t}CK = 7.5ns; for -13E, CL = 2 and ^{t}CK = 7.5ns.
30. CKE is HIGH during refresh command period ^{t}RFC (MIN), else CKE is LOW. The I_{DD}6 limit is actually a nominal value and does not result in a fail value.
31. Refer to device data sheet for timing waveforms.
32. The value of ^{t}RAS used in -13E speed grade module SPDs is calculated from ^{t}RC - ^{t}RP = 45ns.
33. Leakage number reflects the worst case leakage possible through the module pin, not what each memory device contributes.

Micron Technology, Inc., reserves the right to change products or specifications without notice.
©2006 Micron Technology, Inc. All rights reserved.

SPD Clock and Data Conventions

Data states on the SDA line can change only during SCL LOW. SDA state changes during SCL HIGH are reserved for indicating start and stop conditions (see Figures 6, and 7).

SPD Start Condition

All commands are preceded by the start condition, which is a HIGH-to-LOW transition of SDA when SCL is HIGH. The SPD device continuously monitors the SDA and SCL lines for the start condition and will not respond to any command until this condition has been met.

SPD Stop Condition

All communications are terminated by a stop condition, which is a LOW-to-HIGH transition of SDA when SCL is HIGH. The stop condition is also used to place the SPD device into standby power mode.

SPD Acknowledge

Acknowledge is a software convention used to indicate successful data transfers. The transmitting device, either master or slave, will release the bus after transmitting eight bits. During the ninth clock cycle, the receiver will pull the SDA line LOW to acknowledge that it received the eight bits of data (see Figure 8).

The SPD device will always respond with an acknowledge after recognition of a start condition and its slave address. If both the device and a WRITE operation have been selected, the SPD device will respond with an acknowledge after the receipt of each subsequent eight bit word. In the read mode the SPD device will transmit eight bits of data, release the SDA line and monitor the line for an acknowledge. If an acknowledge is detected and no stop condition is generated by the master, the slave will continue to transmit data. If an acknowledge is not detected, the slave will terminate further data transmissions and await the stop condition to return to standby power mode.

Figure 6: Data Validity

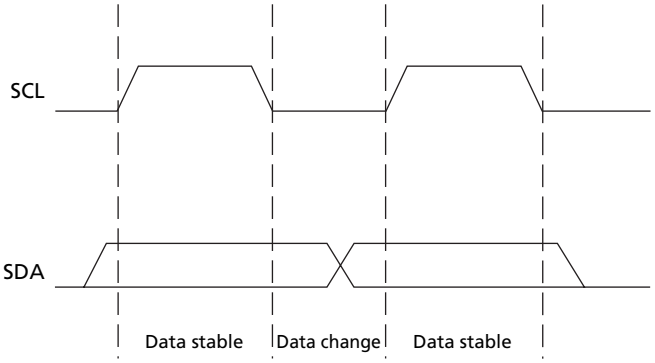

Figure 7: Definition of Start and Stop

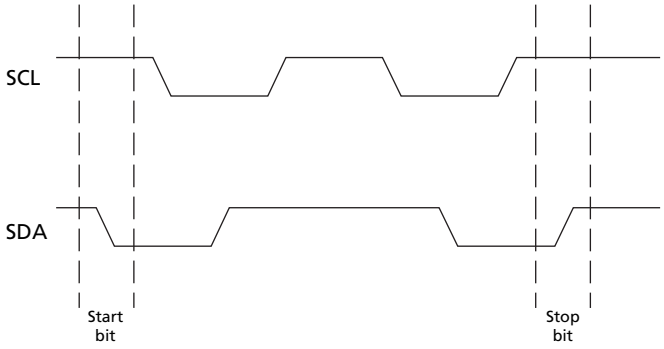

Figure 8: Acknowledge Response From Receiver

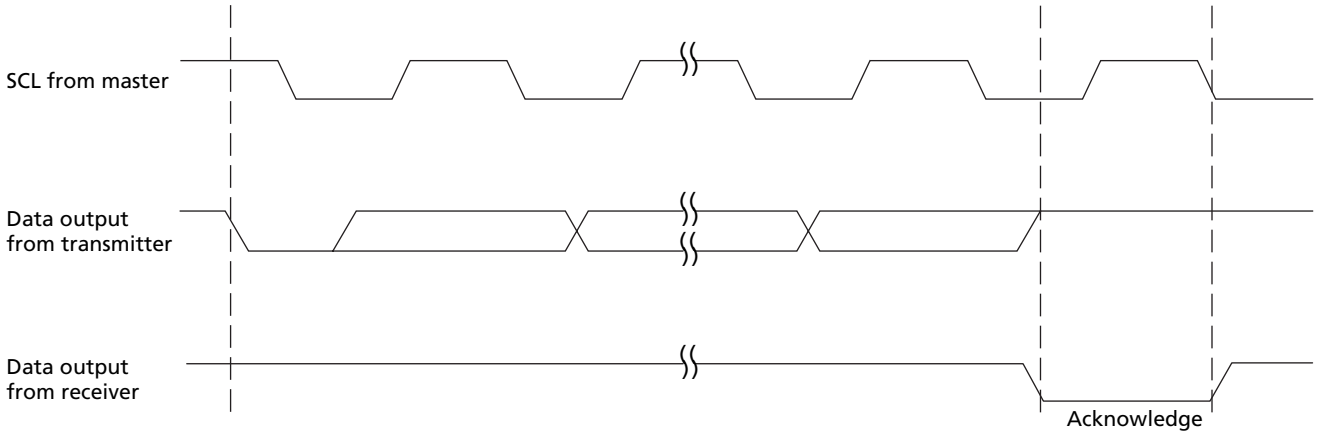

Micron Technology, Inc., reserves the right to change products or specifications without notice.
©2006 Micron Technology, Inc. All rights reserved.

Table 16: EEPROM Device Select Code

Most significant bit (b7) is sent first

	DEVICE TYPE IDENTIFIER				CHIP ENABLE			RW
	b7	b6	b5	b4	b3	b2	b1	b0
Memory area select code (two arrays)	1	0	1	0	SA2	SA1	SA0	RW
Protection register select code	0	1	1	0	SA2	SA1	SA0	RW

Table 17: EEPROM Operating Modes

MODE	RW# BIT	WC	BYTES	INITIAL SEQUENCE
Current address READ	1	VIH or VIL	1	START, device select, RW = 1
Random address READ	0	VIH or VIL	1	START, device select, RW = 0, Address
	1	VIH or VIL		RESTART, device select, RW = 1
Sequential READ	1	VIH or VIL	≥1	similar to current or random address READ
Byte WRITE	0	VIL	1	START, device select, RW = 0
Page WRITE	0	VIL	≤16	START, device select, RW# = 0

Figure 9: SPD EEPROM Timing Diagram

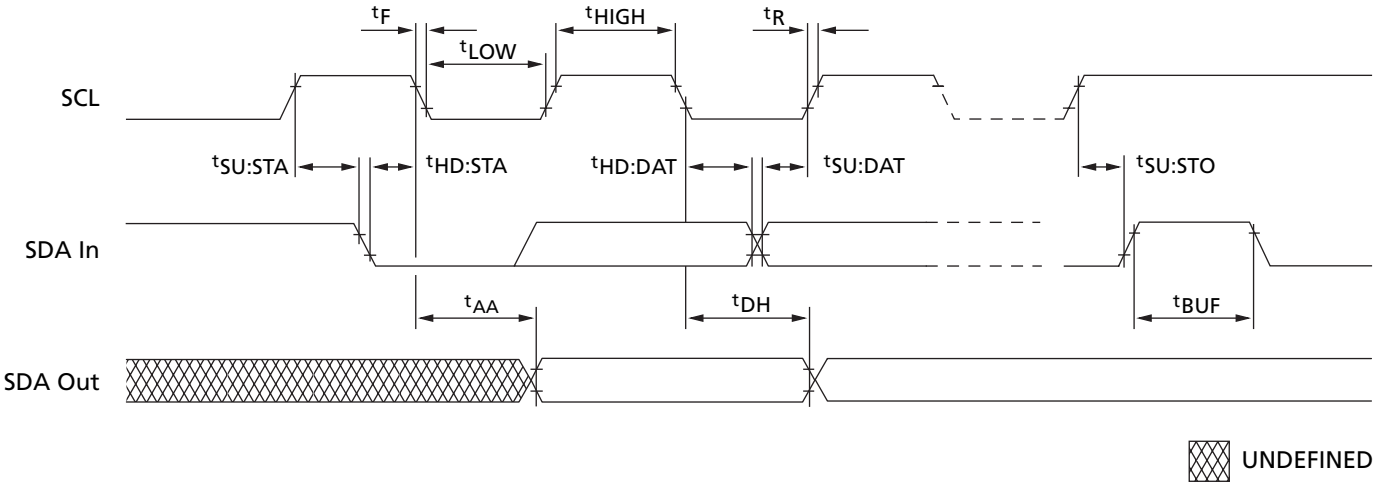

Micron Technology, Inc., reserves the right to change products or specifications without notice.
©2006 Micron Technology, Inc. All rights reserved.

Table 18: Serial Presence-Detect EEPROM DC Operating Conditions

All voltages referenced to V_{SS}; V_{DDSPD} = 2.3V to 3.6V

PARAMETER/CONDITION	SYMBOL	MIN	MAX	UNITS
Supply voltage	V_{DD}	3	3.6	V
Input high voltage: Logic 1; All inputs	V_{IH}	V_{DD} × 0.7	V_{DD} × 0.5	V
Input low voltage: Logic 0; All inputs	V_{IL}	–1	V_{DD} × 0.3	V
Output low voltage: I_{OUT} = 3mA	V_{OL}	–	0.4	V
Input leakage current: V_{IN} = GND to V_{DD}	I_{LI}	–	10	µA
Output leakage current: V_{OUT} = GND to V_{DD}	I_{LO}	–	10	µA
Standby current: SCL = SDA = V_{DD} - 0.3V; All other inputs = GND or 3.3V ±10%	I_{SB}	–	30	µA
Power supply current: SCL clock frequency = 100 KHz	I_{CC}	–	2	mA

Table 19: Serial Presence-Detect EEPROM AC Operating Conditions

All voltages referenced to V_{SS}; V_{DDSPD} = 2.3V to 3.6V

PARAMETER/CONDITION	SYMBOL	MIN	MAX	UNITS	NOTES
SCL LOW to SDA data-out valid	^{t}AA	0.2	0.9	µs	1
Time the bus must be free before a new transition can start	^{t}BUF	1.3		µs	
Data-out hold time	^{t}DH	200		ns	
SDA and SCL fall time	^{t}F		300	ns	2
Data-in hold time	$^{t}HD:DAT$	0		µs	
Start condition hold time	$^{t}HD:STA$	0.6		µs	
Clock HIGH period	$^{t}HIGH$	0.6		µs	
Noise suppression time constant at SCL, SDA inputs	^{t}I		50	ns	
Clock LOW period	^{t}LOW	1.3		µs	
SDA and SCL rise time	^{t}R		0.3	µs	2
SCL clock frequency	^{f}SCL		400	KHz	
Data-in setup time	$^{t}SU:DAT$	100		ns	
Start condition setup time	$^{t}SU:STA$	0.6		µs	3
Stop condition setup time	$^{t}SU:STO$	0.6		µs	
WRITE cycle time	^{t}WRC		10	ms	4

NOTE:

1. To avoid spurious START and STOP conditions, a minimum delay is placed between SCL = 1 and the falling or rising edge of SDA.
2. This parameter is sampled.
3. For a restart condition, or following a WRITE cycle.
4. The SPD EEPROM WRITE cycle time (^{t}WRC) is the time from a valid stop condition of a write sequence to the end of the EEPROM internal erase/program cycle. During the WRITE cycle, the EEPROM bus interface circuit is disabled, SDA remains HIGH due to pull-up resistor, and the EEPROM does not respond to its slave address.

Micron Technology, Inc., reserves the right to change products or specifications without notice.
©2006 Micron Technology, Inc. All rights reserved.

Table 20: Serial Presence-Detect Matrix

"1"/"0": Serial Data, "driven to HIGH"/"driven to LOW"; V_{DD} = +3.3V ±0.3V

BYTE	DESCRIPTION	ENTRY (VERSION)	MT16LSDF3264H	MT16LSDF6464H
0	Number of bytes used by Micron	128	80	80
1	Total number of SPD memory bytes	256	08	08
2	Memory type	SDRAM	04	04
3	Number of row addresses	12 or 13	0C	0D
4	Number of column addresses	10	0A	0A
5	Number of banks	2	02	02
6	Module data width	64	40	40
7	Module data width (continued)	0	00	00
8	Module voltage interface levels	LVTTL	01	01
9	SDRAM cycle time, ^{t}CK (CL = 3)	7ns (-13E) 7.5ns (-133) 8ns (-10E)	70 75 80	70 75 80
10	SDRAM access from clock, ^{t}AC (CL = 3)	5.4ns (-13E/-133) 6ns (-10E)	54 60	54 60
11	Module configuration type	NONE	00	00
12	Refresh rate/type	15.6µs or 7.81µs/self	80	82
13	SDRAM width (primary SDRAM)	8	08	08
14	Error-checking SDRAM data width		00	00
15	MIN clock delay from back-to-back random column addresses, ^{t}CCD	1	01	01
16	Burst lengths supported	1, 2, 4, 8, page	8F	8F
17	Number of banks on SDRAM device	4	04	4
18	CAS latencies supported	2, 3	06	6
19	CS latency	0	01	01
20	WE latency	0	01	01
21	SDRAM module attributes	Unbuffered	00	00
22	SDRAM device attributes: General	14	0E	0E
23	SDRAM cycle time, ^{t}CK (CL = 2)	7.5ns (13E) 10ns (-133/-10E)	75 A0	75 A0
24	SDRAM access from CLK, ^{t}AC (CL = 2)	5.4ns (-13E) 6ns (-133/-10E)	54 60	54 60
25	SDRAM cycle time, ^{t}CK (CL = 1)	–	00	00
26	SDRAM access from CLK, ^{t}AC (CL = 1)	–	00	00
27	MIN row precharge time, ^{t}RP	15ns (-13E) 20ns (-133/-10E)	0F 14	0F 14
28	MIN row active-to-row active, ^{t}RRD	14ns (-13E) 15ns (-133) 20ns (-10E)	0E 0F 14	0E 0F 14
29	MIN RAS#-to-CAS# delay, ^{t}RCD	15ns (-13E) 20ns (-133/-10E)	0F 14	0F 14
30	MIN RAS# pulse width, ^{t}RAS	45ns (-13E) 44ns (133) 50ns (-10E)	2D 2C 32	2D 2C 32

Micron Technology, Inc., reserves the right to change products or specifications without notice.
©2006 Micron Technology, Inc. All rights reserved.

Table 20: Serial Presence-Detect Matrix (Continued)

"1"/"0": Serial Data, "driven to HIGH"/"driven to LOW"; V_{DD} = +3.3V ±0.3V

BYTE	DESCRIPTION	ENTRY (VERSION)	MT16LSDF3264H	MT16LSDF6464H
31	Module rank density	128MB or 256MB	20	40
32	Command and address setup time, ^{t}AS, ^{t}CMS	1.5ns (-13E/-133) 2ns (-10E)	15 20	15 20
33	Command and address hold time, ^{t}AH, ^{t}CMH	0.8ns (-13E/-133) 1ns (-10E)	08 10	08 10
34	Data signal input setup time, ^{t}DS	1.5ns (-13E/-133) 2ns (-10E)	15 20	15 20
35	Data signal input hold time, ^{t}DH	0.8ns (-13E/-133) 1ns (-10E)	08 10	08 10
36–40	Reserved		00	00
41	Device MIN ACTIVE/AUTO-REFRESH time, ^{t}RC	66ns (-13E) 71ns (-133) 66ns (-10E)	3C 42 46	3C 42 46
42–61	Reserved		00	00
62	SPD revision	REV. 2.0	02	02
63	Checksum for bytes 0-62	(-13E) (-133) (-10E)	95 E1 2D	B8 04 50
64	Manufacturer's JEDEC ID code	MICRON	2C	2C
65–71	Manufacturer's JEDEC ID code (continued)		FF	FF
72	Manufacturing location	1–12	01–0C	01– 0C
73–90	Module part number (ASCII)		Variable Data	Variable Data
91	PCB identification code	1–9	01–09	01–09
92	Identification code (continued)	0	00	00
93	Year of manufacture in BCD		Variable Data	Variable Data
94	Week of manufacture in BCD		Variable Data	Variable Data
95-98	Module serial number		Variable Data	Variable Data
99–125	Manufacturer-specific data (RSVD)			
126	System frequency	100 MHz/133 MHz (-13E/-133/-10E)	64	64
127	SDRAM component and clock detail		CF	CF

NOTE:

1. The value of ^{t}RAS used for the -13E module is calculated from ^{t}RC - ^{t}RP. Actual device spec value is 37ns.

Micron Technology, Inc., reserves the right to change products or specifications without notice.
©2006 Micron Technology, Inc. All rights reserved.

Figure 10: 144-Pin SODIMM Dimensions

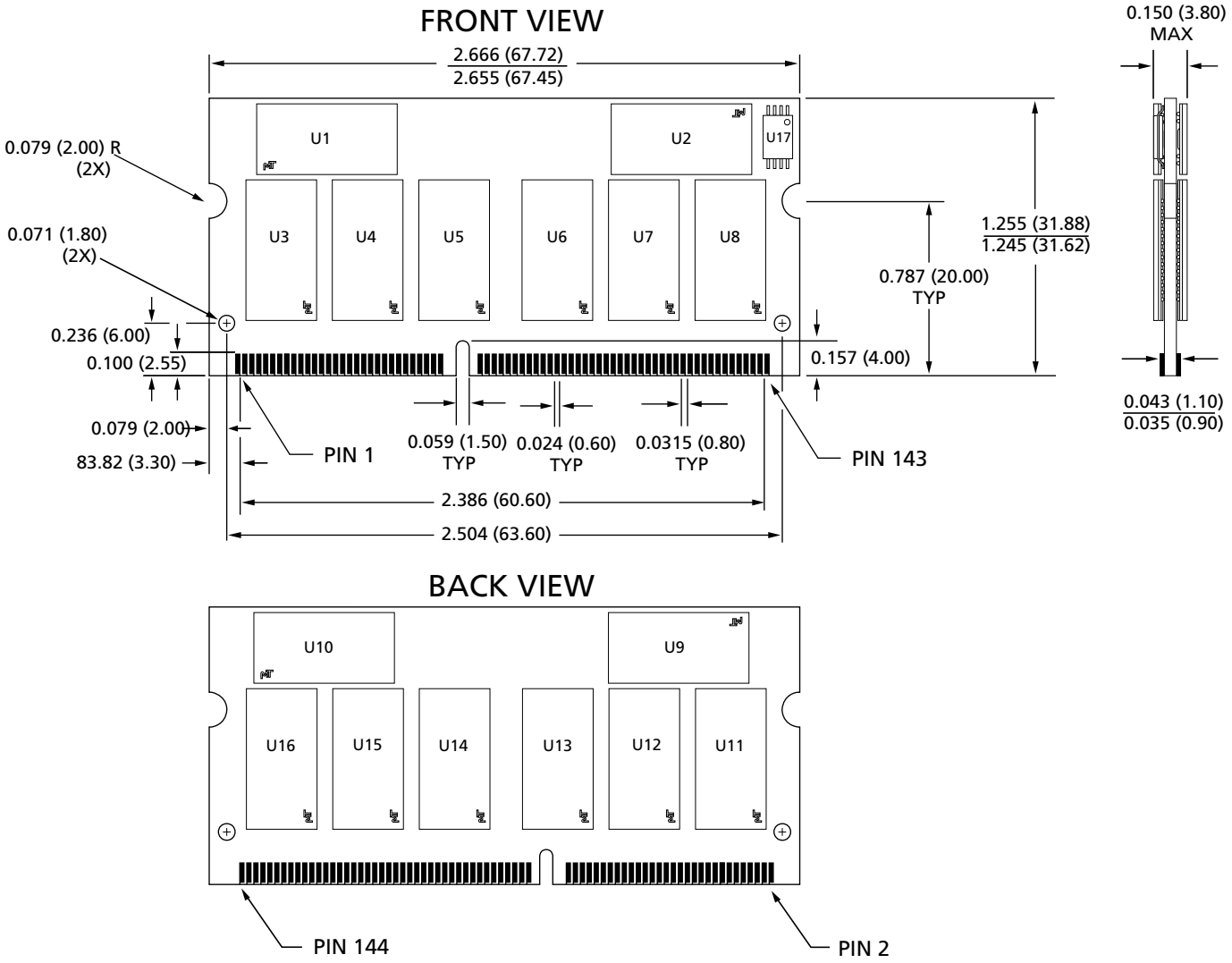

NOTE:

All dimensions in inches (millimeters); $\frac{\text{MAX}}{\text{MIN}}$ or typical where noted.

Data Sheet Designation

Released (No Mark): This data sheet contains minimum and maximum limits specified over the complete power supply and temperature range for production devices. Although considered final, these specifications are subject to change, as further product development and data characterization sometimes occur.

8000 S. Federal Way, P.O. Box 6, Boise, ID 83707-0006, Tel: 208-368-3900
E-mail: prodmktg@micron.com, Internet: http://www.micron.com, Customer Comment Line: 800-932-4992
Micron, the M logo, and the Micron logo are trademarks and/or service marks of Micron Technology, Inc.
All other trademarks are the property of their respective owners.

Micron Technology, Inc., reserves the right to change products or specifications without notice.
©2006 Micron Technology, Inc. All rights reserved.