DDR2 SDRAM FBDIMM

MT36HTF25672FZ – 2GB
MT36HTF51272FZ – 4GB
MT36HTF1G72FZ – 8GB

Features

- 240-pin, DDR2 fully buffered dual in-line memory module (FBDIMM)
- Fast data transfer rates: PC2-4200, PC2-5300, or PC2-6400
- 2GB (256 Meg x 72), 4GB (512 Meg x 72), or 8GB (1 Gig x 72)
- 3.2 Gb/s, 4 Gb/s, or 4.8 Gb/s link transfer rates
- High-speed, 1.5V differential, point-to-point link between the host controller and advanced memory buffer (AMB)
- Fault-tolerant; can work around a bad bit lane in each direction
- High-density scaling with up to eight FBDIMM devices per channel
- SMBus interface to AMB for configuration register access
- In-band and out-of-band command access
- Deterministic protocol
  - Enables memory controller to optimize DRAM accesses for maximum performance
  - Delivers precise control and repeatable memory behavior
- Automatic DDR2 SDRAM bus and channel calibration
- Transmitter de-emphasis to reduce ISI

Figure 1: 240-Pin FBDIMM (MO-256 R/C E)

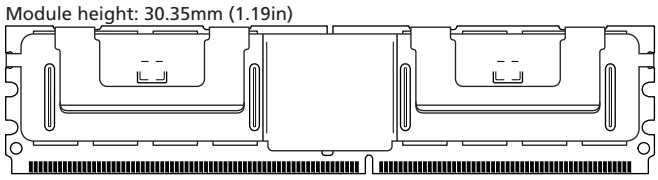

Options	Marking
• Package	
– 240-pin DIMM (halogen-free)	Z
• Frequency/CAS latency	
– 2.5ns @ CL = 5 (DDR2-800)	-80E
– 3.0ns @ CL = 5 (DDR2-667)	-667

Features (Continued)

- MBIST and IBIST test functions
- Transparent mode for DRAM test support
- $V_{DD} = V_{DDQ} = 1.8V$ for DRAM
- $V_{REF} = 0.9V$ SDRAM command and address termination
- $V_{CC} = 1.5V$ for AMB
- $V_{DDSPD} = 3–3.6V$ for AMB and EEPROM
- Serial presence-detect (SPD) with EEPROM
- Gold edge contacts
- Dual rank
- Supports 95°C operation with 2X refresh

Table 1: Key Timing Parameters

Speed Grade	Industry Nomenclature	Data Rate (MT/s)				^tRCD (ns)	^tRP (ns)	^tRC (ns)
		CL = 6	CL = 5	CL = 4	CL = 3			
-80E	PC2-6400	800	800	533	400	12.5	12.5	55
-667	PC2-5300	–	667	533	400	15	15	55
-53E	PC2-4200	–	–	533	400	15	15	55

Micron Technology, Inc. reserves the right to change products or specifications without notice.
© 2009 Micron Technology, Inc. All rights reserved.
Products and specifications discussed herein are subject to change by Micron without notice.

Table 2: Addressing

Parameter	2GB	4GB	8GB
Refresh count	8K	8K	8K
Device bank address	4 BA[1:0]	8 BA[2:0]	8 BA[2:0]
Device page size per bank	1KB	1KB	1KB
Device configuration	512Mb (128 Meg x 4)	1Gb (256 Meg x 4)	2Gb (512 Meg x 4)
Row address	16K A[13:0]	16K A[13:0]	32K A[14:0]
Column address	2K A[11, 9:0]	2K A[11, 9:0]	2K A[11, 9:0]
Module rank address	2 S#[1:0]	2 S#[1:0]	2 S#[1:0]

Table 3: Part Numbers and Timing Parameters – 2GB

Base device: MT47H128M4,[1] 512Mb DDR2 SDRAM

Part Number[2]	Module Density	Configuration	Module Bandwidth	Memory Clock/ Data Rate	Clock Cycles (CL-^{t}RCD-^{t}RP)	Link Transfer Rate
MT36HTF25672FZ-80E__	2GB	256 Meg x 72	6.4 GB/s	2.5ns/800 MT/s	5-5-5	4.8 GT/s
MT36HTF25672FZ-667__	2GB	256 Meg x 72	5.3 GB/s	3.0ns/667 MT/s	5-5-5	4.0 GT/s

Table 4: Part Numbers and Timing Parameters – 4GB

Base device: MT47H256M4,[1] 1Gb DDR2 SDRAM

Part Number[2]	Module Density	Configuration	Module Bandwidth	Memory Clock/ Data Rate	Clock Cycles (CL-^{t}RCD-^{t}RP)	Link Transfer Rate
MT36HTF51272FZ-80E__	4GB	512 Meg x 72	6.4 GB/s	2.5ns/800 MT/s	5-5-5	4.8 GT/s
MT36HTF51272FZ-667__	4GB	512 Meg x 72	5.3 GB/s	3.0ns/667 MT/s	5-5-5	4.0 GT/s

Table 5: Part Numbers and Timing Parameters – 8GB

Base device: MT47H512M4,[1] 2Gb DDR2 SDRAM

Part Number[2]	Module Density	Configuration	Module Bandwidth	Memory Clock/ Data Rate	Clock Cycles (CL-^{t}RCD-^{t}RP)	Link Transfer Rate
MT36HTF1G72FZ-80E__	8GB	1 Gig x 72	6.4 GB/s	2.5ns/800 MT/s	5-5-5	4.8 GT/s
MT36HTF1G72FZ-667__	8GB	1 Gig x 72	5.3 GB/s	3.0ns/667 MT/s	5-5-5	4.0 GT/s

Notes:
1. Data sheets for the base devices can be found on Micron's Web page.
2. All part numbers end with a four-place code (not shown) that designates component, PCB, and AMB revisions. Consult factory for current revision codes. Example: MT36HTF51272FZ-80EH1D6.

Micron Technology, Inc. reserves the right to change products or specifications without notice.
© 2009 Micron Technology, Inc. All rights reserved.

Pin Assignments and Descriptions

Table 6: Pin Assignments

240-Pin FBDIMM Front								240-Pin FBDIMM Back							
Pin	Symbol	Pin	Symbol	Pin	Symbol	Pin	Symbol	Pin	Symbol	Pin	Symbol	Pin	Symbol	Pin	Symbol
1	V_{DD}	31	PN3	61	PN9#	91	PS9#[1]	121	V_{DD}	151	SN3	181	SN9#	211	SS9#[1]
2	V_{DD}	32	PN3#	62	V_{SS}	92	V_{SS}	122	V_{DD}	152	SN3#	182	V_{SS}	212	V_{SS}
3	V_{DD}	33	V_{SS}	63	PN10	93	PS5	123	V_{DD}	153	V_{SS}	183	SN10	213	SS5
4	V_{SS}	34	PN4	64	PN10#	94	PS5#	124	V_{SS}	154	SN4	184	SN10#	214	SS5#
5	V_{DD}	35	PN4#	65	V_{SS}	95	V_{SS}	125	V_{DD}	155	SN4#	185	V_{SS}	215	V_{SS}
6	V_{DD}	36	V_{SS}	66	PN11	96	PS6	126	V_{DD}	156	V_{SS}	186	SN11	216	SS6
7	V_{DD}	37	PN5	67	PN11#	97	PS6#	127	V_{DD}	157	SN5	187	SN11#	217	SS6#
8	V_{SS}	38	PN5#	68	V_{SS}	98	V_{SS}	128	V_{SS}	158	SN5#	188	V_{SS}	218	V_{SS}
9	V_{CC}	39	V_{SS}	69	V_{SS}	99	PS7	129	V_{CC}	159	V_{SS}	189	V_{SS}	219	SS7
10	V_{CC}	40	PN13[1]	70	PS0	100	PS7#	130	V_{CC}	160	SN13[1]	190	SS0	220	SS7#
11	V_{SS}	41	PN13#[1]	71	PS0#	101	V_{SS}	131	V_{SS}	161	SN13#[1]	191	SS0#	221	V_{SS}
12	V_{CC}	42	V_{SS}	72	V_{SS}	102	PS8	132	V_{CC}	162	V_{SS}	192	V_{SS}	222	SS8
13	V_{CC}	43	V_{SS}	73	PS1	103	PS8#	133	V_{CC}	163	V_{SS}	193	SS1	223	SS8#
14	V_{SS}	44	DNU	74	PS1#	104	V_{SS}	134	V_{SS}	164	DNU	194	SS1#	224	V_{SS}
15	V_{TT}	45	DNU	75	V_{SS}	105	DNU	135	V_{TT}	165	DNU	195	V_{SS}	225	DNU
16	DNU	46	V_{SS}	76	PS2	106	DNU	136	DNU	166	V_{SS}	196	SS2	226	DNU
17	RESET#	47	V_{SS}	77	PS2#	107	V_{SS}	137	M_TEST (DNU)	167	V_{SS}	197	SS2#	227	V_{SS}
18	V_{SS}	48	PN12[1]	78	V_{SS}	108	V_{DD}	138	V_{SS}	168	SN12[1]	198	V_{SS}	228	SCK
19	DNU	49	PN12#[1]	79	PS3	109	V_{DD}	139	DNU	169	SN12#[1]	199	SS3	229	SCK#
20	DNU	50	V_{SS}	80	PS3#	110	V_{SS}	140	DNU	170	V_{SS}	200	SS3#	230	V_{SS}
21	V_{SS}	51	PN6	81	V_{SS}	111	V_{DD}	141	V_{SS}	171	SN6	201	V_{SS}	231	V_{DD}
22	PN0	52	PN6#	82	PS4	112	V_{DD}	142	SN0	172	SN6#	202	SS4	232	V_{DD}
23	PN0#	53	V_{SS}	83	PS4#	113	V_{DD}	143	SN0#	173	V_{SS}	203	SS4#	233	V_{DD}
24	V_{SS}	54	PN7	84	V_{SS}	114	V_{SS}	144	V_{SS}	174	SN7	204	V_{SS}	234	V_{SS}
25	PN1	55	PN7#	85	V_{SS}	115	V_{DD}	145	SN1	175	SN7#	205	V_{SS}	235	V_{DD}
26	PN1#	56	V_{SS}	86	DNU	116	V_{DD}	146	SN1#	176	V_{SS}	206	DNU	236	V_{DD}
27	V_{SS}	57	PN8	87	DNU	117	V_{TT}	147	V_{SS}	177	SN8	207	DNU	237	V_{TT}
28	PN2	58	PN8#	88	V_{SS}	118	SA2	148	SN2	178	SN8#	208	V_{SS}	238	V_{DDSPD}
29	PN2#	59	V_{SS}	89	V_{SS}	119	SDA	149	SN2#	179	V_{SS}	209	V_{SS}	239	SA0
30	V_{SS}	60	PN9	90	PS9[1]	120	SCL	150	V_{SS}	180	SN9	210	SS9[1]	240	SA1

Note: 1. The following signals are cyclical redundancy code (CRC) bits and thus appear out of the normal sequence: PN12/PN12#, SN12/SN12#, PN13/PN13#, SN13/SN13#, PS9/PS9#, and SS9/SS9#.

Micron Technology, Inc. reserves the right to change products or specifications without notice.
© 2009 Micron Technology, Inc. All rights reserved.

Table 7: Pin Descriptions

Symbol	Type	Description
PS[9:0]	Input	Primary southbound data, positive lines.
PS#[9:0]	Input	Primary southbound data, negative lines.
SCK	Input	System clock input, positive line.
SCK#	Input	System clock input, negative line.
SCL	Input	Serial presence-detect (SPD) clock input.
SS[9:0]	Input	Secondary southbound data, positive lines.
SS#[9:0]	Input	Secondary southbound data, negative lines.
PN[13:0]	Output	Primary northbound data, positive lines.
PN#[13:0]	Output	Primary northbound data, negative lines.
SN[13:0]	Output	Secondary northbound data, positive lines.
SN#[13:0]	Output	Secondary northbound data, negative lines.
VID0	Output	Voltage identification, connected to V_{SS}. Indicates 1.5V DRAM present on module.
SA[2:0]	I/O	SPD address inputs, also used to select the FBDIMM number in the AMB.
SDA	I/O	SPD data input/output.
RESET#	Supply	AMB reset signal.
V_{CC}	Supply	AMB core power and AMB channel interface power (1.5V).
V_{DD}	Supply	DRAM power and AMB DRAM I/O power (1.5V).
V_{TT}	Supply	DRAM clock, command, and address termination power (V_{DD}/2).
V_{DDSPD}	Supply	SPD/AMB SMBus power.
V_{SS}	Supply	Ground.
M_TEST	–	The M_TEST pin provides an external connection for testing the margin of V_{REF}, which is produced by a voltage divider on the module. It is not intended to be used in normal system operation and must not be connected (DNU) in a system. This test pin may have other features on future card designs and will be included in this specification at that time.
DNU	–	Do not use.

Micron Technology, Inc. reserves the right to change products or specifications without notice.
© 2009 Micron Technology, Inc. All rights reserved.

System Block Diagram

Figure 2: System Block Diagram

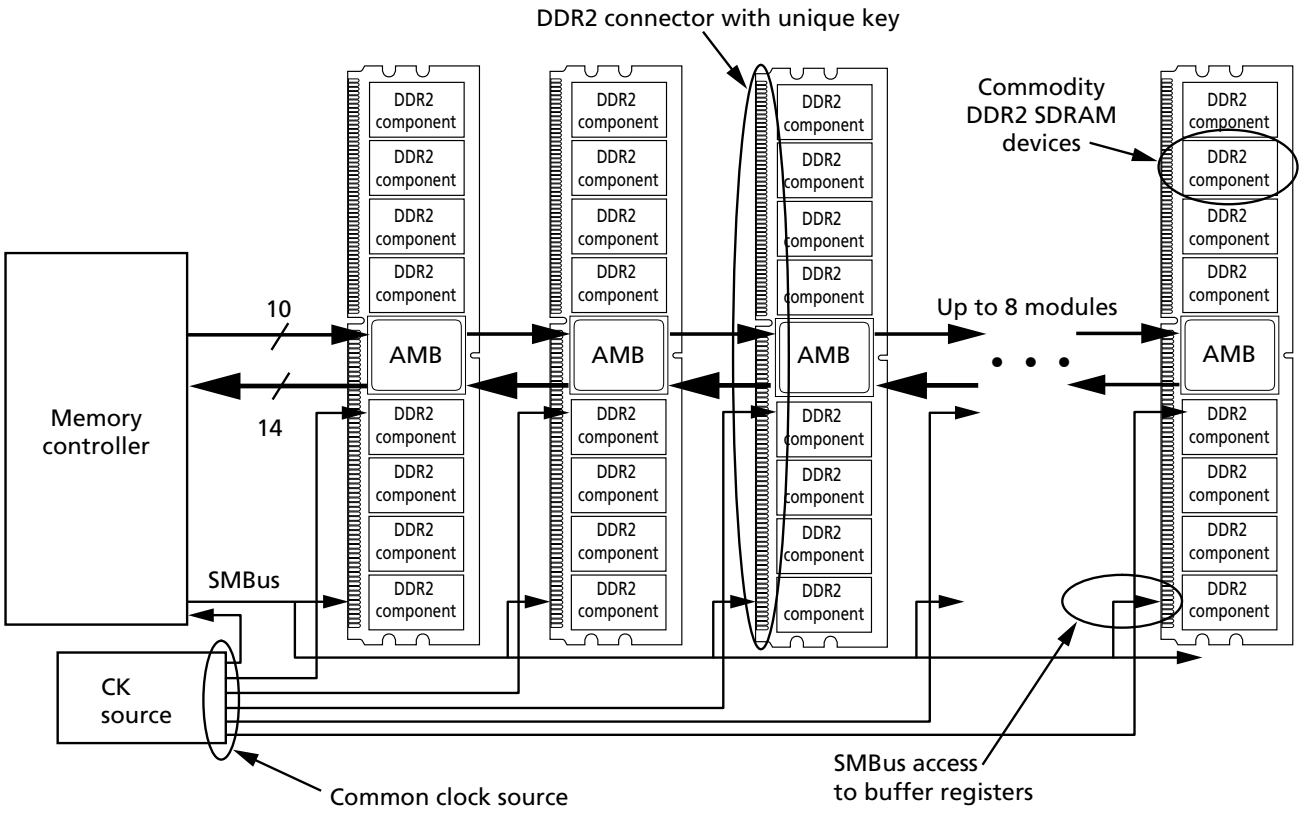

Micron Technology, Inc. reserves the right to change products or specifications without notice.
© 2009 Micron Technology, Inc. All rights reserved.

Functional Block Diagram

Figure 3: Functional Block Diagram

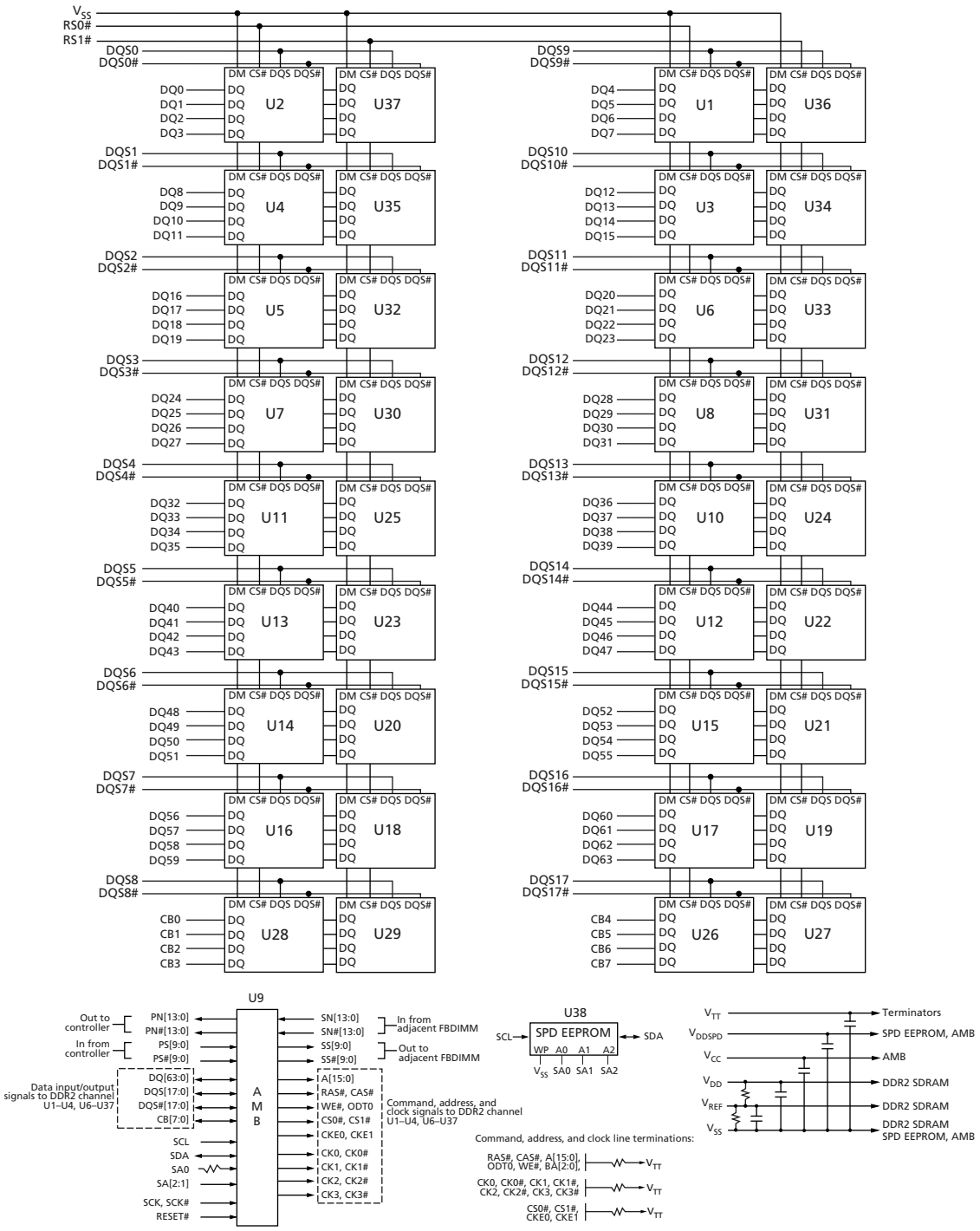

Micron Technology, Inc. reserves the right to change products or specifications without notice.
© 2009 Micron Technology, Inc. All rights reserved.

General Description

Micron's FBDIMM devices adhere to the currently proposed industry specifications for FBDIMMs. The following specifications contain detailed information on FBDIMM design, interfaces, and theory of operation and are listed here for the system designers' convenience. Refer to the JEDEC Web site for available specifications.

- FBDIMM Design Specification – pending JEDEC approval
- FBDIMM: Architecture and Protocol – JESD206
- FBDIMM: Advanced Memory Buffer (AMB) – JESD82-20
- Design for Test, Design for Validation (DF*x*) Specification
- Serial Presence-Detect (SPD) for Fully Buffered DIMM – JEDEC Standard No. 21-C, page 4.1.2.7-1

This DDR2 SDRAM module is a high-bandwidth, large-capacity channel solution that has a narrow host interface. FBDIMM devices use DDR2 SDRAM devices isolated from the channel behind an AMB on the FBDIMM. Memory device capacity remains high, and total memory capacity scales with DDR2 SDRAM bit density.

As shown in the System Block Diagram, the FBDIMM channel provides a communication path from a host controller to an array of DDR2 SDRAM devices, with the DDR2 SDRAM devices buffered behind an AMB device. The physical isolation of the DDR2 SDRAM devices from the channel enhances the communication path and significantly increases the reliability and availability of the memory subsystem.

Advanced Memory Buffer

The AMB isolates the DDR2 SDRAM devices from the channel. This single-chip AMB component, located in the center of each FBDIMM, acts as a repeater and buffer for all signals and commands exchanged between the host controller and DDR2 SDRAM devices, including data input and output. The AMB communicates with the host controller and adjacent FBDIMMs on a system board using an industry-standard, high-speed, differential, 1.5V, point-to-point interface. The AMB also enables buffering of memory traffic to support large memory capacities. Refer to the JEDEC JESD82-20 specification for further information.

Micron Technology, Inc. reserves the right to change products or specifications without notice.
© 2009 Micron Technology, Inc. All rights reserved.

Electrical Specifications

Stresses greater than those listed may cause permanent damage to the module. This is a stress rating only, and functional operation of the module at these or any other conditions outside those indicated in the device data sheet is not implied. Exposure to absolute maximum rating conditions for extended periods may adversely affect reliability.

Table 8: Absolute Maximum Ratings

Parameter	Symbol	Min	Max	Units	Notes
Voltage on any pin relative to V_{SS}	V_{IN}, V_{OUT}	–0.3	+1.75	V	1
Voltage on V_{CC} pin relative to V_{SS}	V_{CC}	–0.3	+1.75	V	
Voltage on V_{DD} pin relative to V_{SS}	V_{DD}	–0.5	+2.3	V	
Voltage on V_{TT} pin relative to V_{SS}	V_{TT}	–0.5	+2.3	V	
DDR2 SDRAM device operating case temperature	T_C	0	+95	°C	2, 3
AMB device operating temperature		0	+110	°C	

Notes:
1. V_{IN} should not be greater than V_{CC}.
2. T_C is specified at 95°C only when using 2X refresh timing (^tREFI = 7.8µs at or below 85°C; ^tREFI = 3.9µs above 85°C); refer to the DDR2 SDRAM component data sheet.
3. See applicable DDR2 SDRAM component data sheet for ^tREFI and extended mode register settings. The ^tREFI parameter is used to specify the doubled refresh interval necessary to sustain <85°C operation.

Table 9: Input DC Voltage and Operating Conditions

Parameter	Symbol	Min	Nom	Max	Units	Notes
AMB supply voltage	V_{CC}	1.46	1.5	1.54	V	
DDR2 SDRAM supply voltage	V_{DD}	1.7	1.8	1.9	V	
Termination voltage	V_{TT}	0.48 × V_{DD}	0.5 × V_{DD}	0.52 × V_{DD}	V	
EEPROM supply voltage	V_{DDSPD}	3	3.3	3.6	V	1
SPD input high (logic 1) voltage	$V_{IH(DC)}$	2.1	–	V_{DDSPD}	V	2
SPD input low (logic 0) voltage	$V_{IL(DC)}$	–	–	0.8	V	2
RESET input high (logic 1) voltage	$V_{IH(DC)}$	1	–	–	V	3
RESET input low (logic 0) voltage	$V_{IL(DC)}$	–	–	0.5	V	2
Leakage current (RESET)	I_L	–90	–	+90	µA	3
Leakage current (link)	I_L	–5	–	+5	µA	4

Notes:
1. Applies to AMB and SPD.
2. Applies to serial memory buffer (SMB) and SPD bus signals.
3. Applies to AMB CMOS signal RESET#.
4. For all other AMB-related DC parameters, please refer to the high-speed differential link interface specification.

Micron Technology, Inc. reserves the right to change products or specifications without notice.
© 2009 Micron Technology, Inc. All rights reserved.

Table 10: Clock Rates

FBDIMM Link Data Rate	Reference Clock	DRAM Clock	DRAM Data Rate
3.2 Gb/s	133 MHz	266 MHz	533 Mb/s
4.0 Gb/s	167 MHz	333 MHz	666 Mb/s
4.8 Gb/s	200 MHz	400 MHz	800 Mb/s

Note: 1. DDR2 components may exceed the listed module speed grades; module may not be available in all listed speed grades

Micron Technology, Inc. reserves the right to change products or specifications without notice.
© 2009 Micron Technology, Inc. All rights reserved.

IDD Specifications and Conditions

Table 11: I_{DD} Conditions

Symbol	Condition
$I_{DD_IDLE_0}$	**Idle current, single, or last DIMM:** L0 state; Idle (0% bandwidth); Primary channel enabled; Secondary channel disabled; CKE HIGH; Command and address lines stable; DDR2 SDRAM clock active
$I_{DD_IDLE_1}$	**Idle current, first DIMM:** L0 state; Idle (0% bandwidth); Primary and secondary channels enabled; CKE HIGH; Command and address lines stable; DDR2 SDRAM clock active
$I_{DD_ACTIVE_1}$	**Active power:** L0 state; 50% DRAM bandwidth; 67% READ; 33% WRITE; Primary and secondary channels enabled; DDR2 SDRAM clock active; CKE HIGH
$I_{DD_ACTIVE_2}$	**Active power, data pass through:** L0 state; 50% DRAM bandwidth to downstream DIMM; 67% READ; 33% WRITE; Primary and secondary channels enabled; DDR2 SDRAM clock active; CKE HIGH; Command and address lines stable
$I_{DD_TRAINING}$	**Training:** Primary and secondary channels enabled; 100% toggle on all channel lanes; DRAMs idle; 0% bandwidth; CKE HIGH; Command and address lines stable; DDR2 SDRAM clock active
I_{DD_IBIST}	**IBIST over all IBIST modes:** DRAM idle (0% bandwidth); Primary channel enabled; Secondary channel enabled; CKE HIGH; Command and address lines stable; DDR2 SDRAM clock active
I_{DD_EI}	**Electrical idle:** DRAM idle (0% bandwidth); Primary channel disabled; Secondary channel disabled; CKE LOW; Command and address lines floated; DDR2 SDRAM clock active; ODT and CKE driven LOW

Note: 1. Actual test conditions may vary from published JEDEC test conditions.

Table 12: I_{DD} Specifications – All Densities DDR2-800

Symbol	$I_{DD_IDLE_0}$	$I_{DD_IDLE_1}$	$I_{DD_ACTIVE_1}$	$I_{DD_ACTIVE_2}$	$I_{DD_TRAINING}$	I_{DD_IBIST}	I_{DD_EI}	Units
I_{CC}	TBD	TBD	TBD	TBD	TBD	TBD	TBD	mA
I_{DD}	TBD	TBD	TBD	TBD	TBD	TBD	TBD	mA
Total power	TBD	TBD	TBD	TBD	TBD	TBD	TBD	W

Table 13: I_{DD} Specifications – 2GB DDR2-667

Symbol	$I_{DD_IDLE_0}$	$I_{DD_IDLE_1}$	$I_{DD_ACTIVE_1}$	$I_{DD_ACTIVE_2}$	$I_{DD_TRAINING}$	I_{DD_IBIST}	I_{DD_EI}	Units
I_{CC}	2600	3400	3900	3700	4000	4500	2500	mA
I_{DD}	2520	2520	4655	2520	2520	2520	452	mA
Total power	8.8	10.1	15	10.6	11.1	11.9	4.8	W

Table 14: I_{DD} Specifications – 4GB DDR2-667

Symbol	$I_{DD_IDLE_0}$	$I_{DD_IDLE_1}$	$I_{DD_ACTIVE_1}$	$I_{DD_ACTIVE_2}$	$I_{DD_TRAINING}$	I_{DD_IBIST}	I_{DD_EI}	Units
I_{CC}	2600	3400	3900	3700	4000	4500	2500	mA
I_{DD}	2340	2340	3995	2340	2340	2340	452	mA
Total power	8.5	9.8	13.7	10.3	10.7	11.5	4.8	W

Micron Technology, Inc. reserves the right to change products or specifications without notice.
© 2009 Micron Technology, Inc. All rights reserved.

Table 15: I_{DD} Specifications – 8GB DDR2-667

Symbol	$I_{DD_IDLE_0}$	$I_{DD_IDLE_1}$	$I_{DD_ACTIVE_1}$	$I_{DD_ACTIVE_2}$	$I_{DD_TRAINING}$	I_{DD_IBIST}	I_{DD_EI}	Units
I_{CC}	2600	3400	3900	3700	4000	4500	2500	mA
I_{DD}	2800	2800	4475	2800	2800	2800	632	mA
Total power	9.5	10.8	14.6	11.3	11.8	12.5	5.1	W

Serial Presence-Detect

For the latest SPD data, refer to Micron's SPD page: www.micron.com/SPD.

Table 16: Serial Presence-Detect EEPROM DC Operating Conditions

Parameter/Condition	Symbol	Min	Max	Units
EEPROM and AMB supply voltage	V_{DDSPD}	3	3.6	V
Input high voltage: Logic 1; all inputs	V_{IH}	V_{DDSPD} × 0.7	V_{DDSPD} + 0.5	V
Input low voltage: Logic 0; all inputs	V_{IL}	–0.6	V_{DDSPD} × 0.3	V
Output low voltage: I_{OUT} = 3mA	V_{OL}	–	0.4	V
Input leakage current: V_{IN} = GND to V_{DD}	I_{LI}	0.10	3	µA
Output leakage current: V_{OUT} = GND to V_{DD}	I_{LO}	0.05	3	µA
Standby current	I_{SB}	1.6	4	µA
Power supply current, READ: SCL clock frequency = 100 kHz	I_{CCR}	0.4	1	mA
Power supply current, WRITE: SCL clock frequency = 100 kHz	I_{CCW}	2	3	mA

Table 17: Serial Presence-Detect EEPROM AC Operating Conditions

Parameter/Condition	Symbol	Min	Max	Units	Notes
SCL LOW to SDA data-out valid	^{t}AA	0.2	0.9	µs	1
Time the bus must be free before a new transition can start	^{t}BUF	1.3	–	µs	
Data-out hold time	^{t}DH	200	–	ns	
SDA and SCL fall time	^{t}F	–	300	ns	2
Data-in hold time	$^{t}HD:DAT$	0	–	µs	
Start condition hold time	$^{t}HD:STA$	0.6	–	µs	
Clock HIGH period	$^{t}HIGH$	0.6	–	µs	
Noise suppression time constant at SCL, SDA inputs	^{t}I	–	50	ns	
Clock LOW period	^{t}LOW	1.3	–	µs	
SDA and SCL rise time	^{t}R	–	0.3	µs	2
SCL clock frequency	^{f}SCL	–	400	kHz	
Data-in setup time	$^{t}SU:DAT$	100	–	ns	
Start condition setup time	$^{t}SU:STA$	0.6	–	µs	3
Stop condition setup time	$^{t}SU:STO$	0.6	–	µs	

Micron Technology, Inc. reserves the right to change products or specifications without notice.
© 2009 Micron Technology, Inc. All rights reserved.

Table 17: Serial Presence-Detect EEPROM AC Operating Conditions (Continued)

Parameter/Condition	Symbol	Min	Max	Units	Notes
WRITE cycle time	^{t}WRC	–	10	ms	4

Notes:
1. To avoid spurious start and stop conditions, a minimum delay is placed between SCL = 1 and the falling or rising edge of SDA.
2. This parameter is sampled.
3. For a restart condition, or following a WRITE cycle.
4. The SPD EEPROM WRITE cycle time (^{t}WRC) is the time from a valid stop condition of a write sequence to the end of the EEPROM internal ERASE/PROGRAM cycle. During the WRITE cycle, the EEPROM bus interface circuit is disabled, SDA remains HIGH due to pull-up resistance, and the EEPROM does not respond to its slave address.

Micron Technology, Inc. reserves the right to change products or specifications without notice.
© 2009 Micron Technology, Inc. All rights reserved.

Module Dimensions

Figure 4: 240-Pin DDR2 FBDIMM

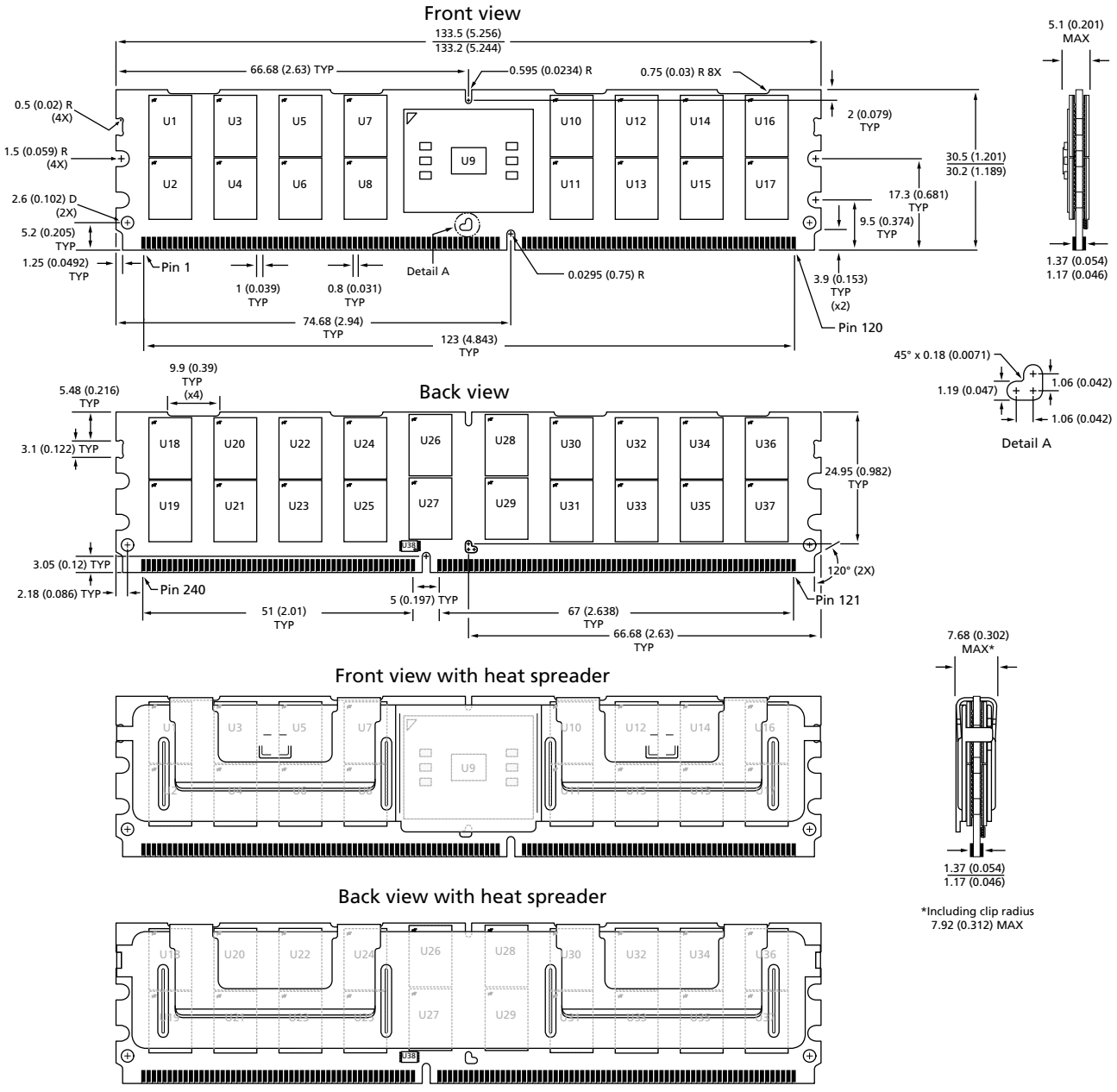

Notes:
1. All dimensions are in millimeters (inches); MAX/MIN or typical (TYP) where noted.
2. The dimensional diagram is for reference only.

Micron Technology, Inc. reserves the right to change products or specifications without notice.
© 2009 Micron Technology, Inc. All rights reserved.

8000 S. Federal Way, P.O. Box 6, Boise, ID 83707-0006, Tel: 208-368-3900
www.micron.com/productsupport Customer Comment Line: 800-932-4992
Micron and the Micron logo are trademarks of Micron Technology, Inc.
All other trademarks are the property of their respective owners.
This data sheet contains minimum and maximum limits specified over the power supply and temperature range set forth herein. Although considered final, these specifications are subject to change, as further product development and data characterization sometimes occur.

Micron Technology, Inc. reserves the right to change products or specifications without notice.
© 2009 Micron Technology, Inc. All rights reserved.