DDR3 SDRAM UDIMM

MT9JSF12872A – 1GB

For component data sheets, refer to Micron's Web site: www.micron.com

Features

- DDR3 functionality and operations supported as per the component data sheet
- 240-pin, unbuffered dual in-line memory module (UDIMM)
- Fast data transfer rates: PC3-10600, PC3-8500, or PC3-6400
- 1GB (128 Meg x 72)
- V_{DD} = 1.5V ±0.075V
- V_{DDSPD} = +3.0V to +3.6V
- Supports ECC error detection and correction
- Nominal and dynamic on-die termination (ODT) for data, strobe, and mask signals
- Single rank
- On-board I^2C temperature sensor with integrated serial presence-detect (SPD) EEPROM
- 8 internal device banks
- Fixed burst chop (BC) of 4 and burst length (BL) of 8 via the mode register set (MRS)
- Selectable BC4 or BL8 on-the-fly (OTF)
- Gold edge contacts
- Pb-free
- Fly-by topology
- Terminated control, command, and address bus

Figure 1: 240-Pin UDIMM (MO-269 R/C D)

PCB height: 30.0mm (1.181in)

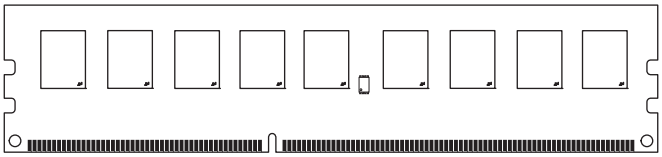

Options	Marking
• Operating temperature[1]	
– Commercial (0°C ≤ T_A ≤ +70°C)	None
– Industrial (–40°C ≤ T_A ≤ +85°C)	I
• Package	
– 240-pin DIMM	Y
• Frequency/CAS latency	
– 1.5ns @CL = 8 (DDR3-1333)	-1G5
– 1.5ns @CL = 9 (DDR3-1333)	-1G4
– 1.5ns @CL = 10 (DDR3-1333)[2]	-1G3
– 1.87ns @CL = 7 (DDR3-1066)	-1G1
– 1.87ns @CL = 8 (DDR3-1066)	-1G0
– 2.5ns @CL = 5 (DDR3-800)[2]	-80C
– 2.5ns @CL = 6 (DDR3-800)[2]	-80B

Notes: 1. Contact Micron for industrial temperature module offerings.
2. Not recommended for new designs.

Table 1: Key Timing Parameters

Speed Grade	Industry Nomenclature	Data Rate (MT/s)						t_{RCD} (ns)	t_{RP} (ns)	t_{RC} (ns)
		CL = 10	CL = 9	CL = 8	CL = 7	CL = 6	CL = 5			
-1G5	PC3-10600	1333	1333	1333	1066	800	800	12	12	48
-1G4	PC3-10600	1333	1333	1066	1066	800	–	13.5	13.5	49.5
-1G3	PC3-10600	1333	–	1066	–	800	–	15	15	51
-1G1	PC3-8500	–	–	1066	1066	800	–	13.125	13.125	50.625
-1G0	PC3-8500	–	–	1066	–	800	–	15	15	52.5
-80C	PC3-6400	–	–	–	–	800	800	12.5	12.5	50
-80B	PC3-6400	–	–	–	–	800	–	15	15	52.5

Micron Technology, Inc., reserves the right to change products or specifications without notice.
©2008 Micron Technology, Inc. All rights reserved.
Products and specifications discussed herein are subject to change by Micron without notice.

Table 2: Addressing

Parameter	1GB
Refresh count	8K
Row address	16K (A[13:0])
Device bank address	8 (BA[2:0])
Device configuration	1Gb (128 Meg x 8)
Column address	1K (A[9:0])
Module rank address	1 (S0#)

Table 3: Part Numbers and Timing Parameters – 1GB Modules

Base device: MT41J128M8,[1] 1Gb DDR3 SDRAM

Part Number[2]	Module Density	Configuration	Module Bandwidth	Memory Clock/ Data Rate	Clock Cycles ($CL-^tRCD-^tRP$)
MT9JSF12872A(I)Y-1G5__	1GB	128 Meg x 72	10.6 GB/s	1.5ns/1333 MT/s	8-8-8
MT9JSF12872A(I)Y-1G4__	1GB	128 Meg x 72	10.6 GB/s	1.5ns/1333 MT/s	9-9-9
MT9JSF12872A(I)Y-1G3__	1GB	128 Meg x 72	10.6 GB/s	1.5ns/1333 MT/s	10-10-10
MT9JSF12872A(I)Y-1G1__	1GB	128 Meg x 72	8.5 GB/s	1.87ns/1066 MT/s	7-7-7
MT9JSF12872A(I)Y-1G0__	1GB	128 Meg x 72	8.5 GB/s	1.87ns/1066 MT/s	8-8-8
MT9JSF12872A(I)Y-80C__	1GB	128 Meg x 72	6.4 GB/s	2.5ns/800 MT/s	5-5-5
MT9JSF12872A(I)Y-80B__	1GB	128 Meg x 72	6.4 GB/s	2.5ns/800 MT/s	6-6-6

Notes:
1. The data sheet for the base device can be found on Micron's Web site.
2. All part numbers end with a two-place code (not shown) that designates component and PCB revisions. Consult factory for current revision codes.
   Example: MT9JSF12872AY-1G1D1.

Micron Technology, Inc., reserves the right to change products or specifications without notice.
©2008 Micron Technology, Inc. All rights reserved

Pin Assignments and Descriptions

Table 4: Pin Assignments

240-Pin DDR3 UDIMM Front								240-Pin DDR3 UDIMM Back							
Pin	Symbol	Pin	Symbol	Pin	Symbol	Pin	Symbol	Pin	Symbol	Pin	Symbol	Pin	Symbol	Pin	Symbol
1	$V_{REF}DQ$	31	DQ25	61	A2	91	DQ41	121	V_{SS}	151	V_{SS}	181	A1	211	V_{SS}
2	V_{SS}	32	V_{SS}	62	V_{DD}	92	V_{SS}	122	DQ4	152	DM3	182	V_{DD}	212	DM5
3	DQ0	33	DQS3#	63	NC	93	DQS5#	123	DQ5	153	NC	183	V_{DD}	213	NC
4	DQ1	34	DQS3	64	NC	94	DQS5	124	V_{SS}	154	V_{SS}	184	CK0	214	V_{SS}
5	V_{SS}	35	V_{SS}	65	V_{DD}	95	V_{SS}	125	DM0	155	DQ30	185	CK0#	215	DQ46
6	DQS0#	36	DQ26	66	V_{DD}	96	DQ42	126	NC	156	DQ31	186	V_{DD}	216	DQ47
7	DQS0	37	DQ27	67	$V_{REF}CA$	97	DQ43	127	V_{SS}	157	V_{SS}	187	EVENT#	217	V_{SS}
8	V_{SS}	38	V_{SS}	68	NC	98	V_{SS}	128	DQ6	158	CB4	188	A0	218	DQ52
9	DQ2	39	CB0	69	V_{DD}	99	DQ48	129	DQ7	159	CB5	189	V_{DD}	219	DQ53
10	DQ3	40	CB1	70	A10	100	DQ49	130	V_{SS}	160	V_{SS}	190	BA1	220	V_{SS}
11	V_{SS}	41	V_{SS}	71	BA0	101	V_{SS}	131	DQ12	161	DM8	191	V_{DD}	221	DM6
12	DQ8	42	DQS8#	72	V_{DD}	102	DQS6#	132	DQ13	162	NC	192	RAS#	222	NC
13	DQ9	43	DQS8	73	WE#	103	DQS6	133	V_{SS}	163	V_{SS}	193	S0#	223	V_{SS}
14	V_{SS}	44	V_{SS}	74	CAS#	104	V_{SS}	134	DM1	164	CB6	194	V_{DD}	224	DQ54
15	DQS1#	45	CB2	75	V_{DD}	105	DQ50	135	NC	165	CB7	195	ODT0	225	DQ55
16	DQS1	46	CB3	76	NC	106	DQ51	136	V_{SS}	166	V_{SS}	196	A13	226	V_{SS}
17	V_{SS}	47	V_{SS}	77	NC	107	V_{SS}	137	DQ14	167	NC	197	V_{DD}	227	DQ60
18	DQ10	48	NC	78	V_{DD}	108	DQ56	138	DQ15	168	RESET#	198	NC	228	DQ61
19	DQ11	49	NC	79	NC	109	DQ57	139	V_{SS}	169	NC	199	V_{SS}	229	V_{SS}
20	V_{SS}	50	CKE0	80	V_{SS}	110	V_{SS}	140	DQ20	170	V_{DD}	200	DQ36	230	DM7
21	DQ16	51	V_{DD}	81	DQ32	111	DQS7#	141	DQ21	171	A15	201	DQ37	231	NC
22	DQ17	52	BA2	82	DQ33	112	DQS7	142	V_{SS}	172	A14	202	V_{SS}	232	V_{SS}
23	V_{SS}	53	NC	83	V_{SS}	113	V_{SS}	143	DM2	173	V_{DD}	203	DM4	233	DQ62
24	DQS2#	54	V_{DD}	84	DQS4#	114	DQ58	144	NC	174	A12	204	NC	234	DQ63
25	DQS2	55	A11	85	DQS4	115	DQ59	145	V_{SS}	175	A9	205	V_{SS}	235	V_{SS}
26	V_{SS}	56	A7	86	V_{SS}	116	V_{SS}	146	DQ22	176	V_{DD}	206	DQ38	236	V_{DDSPD}
27	DQ18	57	V_{DD}	87	DQ34	117	SA0	147	DQ23	177	A8	207	DQ39	237	SA1
28	DQ19	58	A5	88	DQ35	118	SCL	148	V_{SS}	178	A6	208	V_{SS}	238	SDA
29	V_{SS}	59	A4	89	V_{SS}	119	SA2	149	DQ28	179	V_{DD}	209	DQ44	239	V_{SS}
30	DQ24	60	V_{DD}	90	DQ40	120	V_{TT}	150	DQ29	180	A3	210	DQ45	240	V_{TT}

Micron Technology, Inc., reserves the right to change products or specifications without notice.
©2008 Micron Technology, Inc. All rights reserved

Table 5: Pin Descriptions

Symbol	Type	Description
A[13:0]	Input	**Address inputs:** Provide the row address for ACTIVATE commands, and the column address and auto precharge bit (A10) for READ/WRITE commands, to select one location out of the memory array in the respective bank. A10 is sampled during a PRECHARGE command to determine whether the PRECHARGE applies to one bank (A10 LOW, bank selected by BA[2:0]) or all banks (A10 HIGH). If only one bank is to be precharged, the bank is selected by BA. A12 is also used for BC4/BL8 identification as "BL on-the-fly" during CAS commands. The address inputs also provide the op-code during the mode register command set. A[13:0] address the 1Gb DDR3 devices.
BA[2:0]	Input	**Bank address inputs:** BA[2:0] define the device bank to which an ACTIVATE, READ, WRITE, or PRECHARGE command is being applied. BA[2:0] define which mode register (MR0, MR1, MR2, and MR3) is loaded during the LOAD MODE command.
CK0, CK0#	Input	**Clock:** CK and CK# are differential clock inputs. All control, command, and address input signals are sampled on the crossing of the positive edge of CK and the negative edge of CK#. Output data (DQ, DQS, and DQS#) is referenced to the crossings of CK and CK#.
CKE0	Input	**Clock enable:** CKE enables (registered HIGH) and disables (registered LOW) internal circuitry and clocks on the DRAM.
DM[8:0]	Input	**Input data mask:** DM is an input mask signal for write data. Input data is masked when DM is sampled HIGH, along with the input data, during a write access. DM is sampled on both edges of the DQS. Although the DM pins are input-only, the DM loading is designed to match that of the DQ and DQS pins.
ODT0	Input	**On-die termination:** ODT enables (registered HIGH) and disables (registered LOW) termination resistance internal to the DDR3 SDRAM. When enabled in normal operation, ODT is only applied to the following pins: DQ, DQS, DQS#, and DM. The ODT input will be ignored if disabled via the LOAD MODE command.
RAS#, CAS#, WE#	Input	**Command inputs:** RAS#, CAS#, and WE# (along with S#) define the command being entered.
RESET#	Input (LVCMOS)	**Reset:** RESET# is an active LOW CMOS input referenced to V_{SS}. The RESET# input receiver is a CMOS input defined as a rail-to-rail signal with DC HIGH ≥ 0.8 × $V_{DD}Q$ and DC LOW ≤ 0.2 × $V_{DD}Q$. RESET# assertion and deassertion are asynchronous. System applications will most likely be unterminated, heavily loaded, and have very slow slew rates. A slow slew rate receiver design is recommended along with implementing on-chip noise filtering to prevent false triggering (RESET# assertion minimum pulse width is 100ns).
S0#	Input	**Chip select:** S# enables (registered LOW) and disables (registered HIGH) the command decoder.
SA[2:0]	Input	**Serial address inputs:** These pins are used to configure the temperature sensor/SPD EEPROM address range on the I^2C bus.
SCL	Input	**Serial clock for temperature sensor/SPD EEPROM:** SCL is used to synchronize the communication to and from the temperature sensor/SPD EEPROM.
CB[7:0]	I/O	**Check bits:** Data used for ECC.
DQ[63:0]	I/O	**Data input/output:** Bidirectional data bus.
DQS[8:0], DQS#[8:0]	I/O	**Data strobe:** DQS and DQS# are differential data strobes. Output with read data. Edge-aligned with read data. Input with write data. Center-aligned with write data.
SDA	I/O	**Serial data:** SDA is a bidirectional pin used to transfer addresses and data into and out of the temperature sensor/SPD EEPROM on the module on the I^2C bus.
EVENT#	Output (open drain)	**Temperature event:** The EVENT# pin is asserted by the temperature sensor when critical temperature thresholds have been exceeded.
V_{DD}	Supply	**Power supply:** 1.5V ±0.075V. The component V_{DD} and $V_{DD}Q$ are connected to the module V_{DD}.
V_{DDSPD}	Supply	**Temperature sensor/SPD EEPROM power supply:** +3.0V to +3.6V.

Micron Technology, Inc., reserves the right to change products or specifications without notice.
©2008 Micron Technology, Inc. All rights reserved

Table 5: Pin Descriptions (continued)

Symbol	Type	Description
$V_{REF}CA$	Supply	**Reference voltage:** Control, command, and address ($V_{DD}/2$).
$V_{REF}DQ$	Supply	**Reference voltage:** DQ, DM ($V_{DD}/2$).
V_{SS}	Supply	Ground.
V_{TT}	Supply	**Termination voltage:** Used for control, command, and address ($V_{DD}/2$).
NC	–	**No connect:** These pins are not connected on the module.

Micron Technology, Inc., reserves the right to change products or specifications without notice.
©2008 Micron Technology, Inc. All rights reserved

Functional Block Diagram

Figure 2: Functional Block Diagram

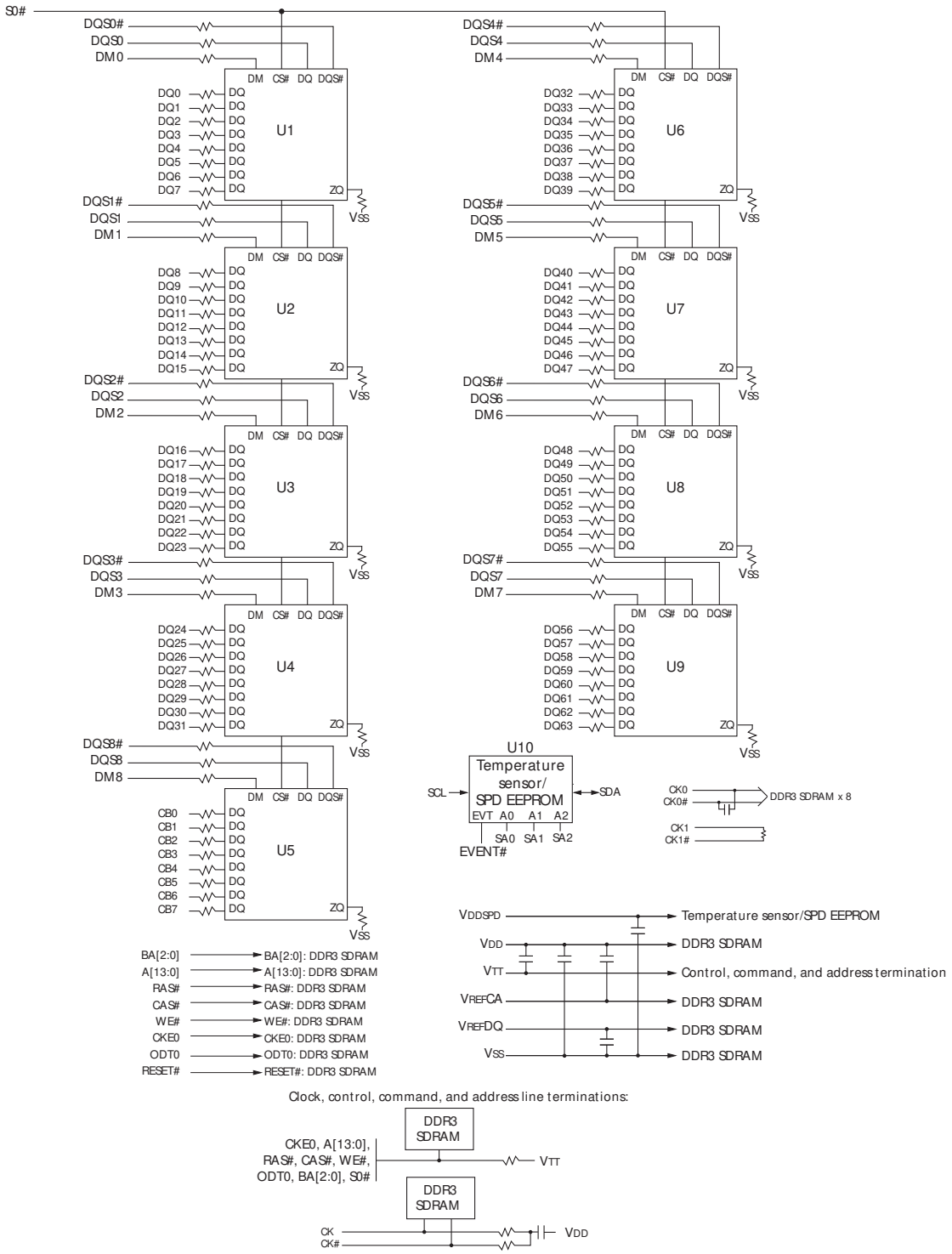

Notes: 1. The ZQ ball on each DDR3 component is connected to an external 240Ω ±1 percent resistor that is tied to ground. It is used for the calibration of the component's ODT and output driver.

Micron Technology, Inc., reserves the right to change products or specifications without notice.
©2008 Micron Technology, Inc. All rights reserved

General Description

The MT9JSF12872A DDR3 SDRAM module is a high-speed, CMOS dynamic random access 1GB memory module organized in a x72 configuration. This DDR3 SDRAM module uses internally configured, 8-bank 1Gb DDR3 SDRAM devices.

DDR3 SDRAM modules use double data rate architecture to achieve high-speed operation. The double data rate architecture is essentially an 8*n*-prefetch architecture with an interface designed to transfer two data words per clock cycle at the I/O pins. A single read or write access for the DDR3 SDRAM module effectively consists of a single 8*n*-bit-wide, one-clock-cycle data transfer at the internal DRAM core and eight corresponding *n*-bit-wide, one-half-clock-cycle data transfers at the I/O pins.

The differential data strobe (DQS, DQS#) is transmitted externally, along with data, for use in data capture at the DDR3 SDRAM input receiver. DQS is center-aligned with data for WRITEs. The read data is transmitted by the DDR3 SDRAM and edge-aligned to the data strobes.

DDR3 SDRAM modules operate from a differential clock (CK and CK#); the crossing of CK going HIGH and CK# going LOW will be referred to as the positive edge of CK. Control, command, and address signals are registered at every positive edge of CK. Input data is registered on both edges of DQS, and output data is referenced to both edges of DQS, as well as to both edges of CK.

Fly-By Topology

These DDR3 modules use faster clock speeds than earlier DDR technologies, making signal quality more important than ever. For improved signal quality, the clock, control, command, and address buses have been routed in a fly-by topology, where each clock, control, command, and address pin on each DRAM is connected to a single trace and terminated (rather than a tree structure, where the termination is off the module near the connector). Inherent to fly-by topology, the timing skew between the clock and DQS signals can be easily accounted for by using the write-leveling feature of DDR3.

Temperature Sensor with Serial Presence-Detect EEPROM

Thermal Sensor Operations

The temperature from the integrated thermal sensor is monitored and converted into a digital word via the I^2C bus. System designers can use the user-programmable registers to create a custom temperature-sensing solution based on system requirements. Programming and configuration details comply with JEDEC Standard No. 21-C, page 4.7-1, “Mobile Platform Memory Module Thermal Sensor Component Specification.”

Micron Technology, Inc., reserves the right to change products or specifications without notice.
©2008 Micron Technology, Inc. All rights reserved

Serial Presence-Detect EEPROM Operation

DDR3 SDRAM modules incorporate serial presence-detect. The SPD data is stored in a 256-byte EEPROM. The first 128 bytes are programmed by Micron to comply with JEDEC specification JC-45 "Appendix X: Serial Presence Detect (SPD) for DDR3 SDRAM Modules" (pending approval). These bytes identify module-specific timing parameters, configuration information, and physical attributes. User-specific information can be written into the remaining 128 bytes of storage. System READ/WRITE operations between the master (system logic) and the slave EEPROM device occur via a standard I^2C bus using the DIMM's SCL (clock) and SDA (data) signals, together with SA[2:0], which provide eight unique DIMM/EEPROM addresses. Write protect (WP) is connected to V_{SS}, permanently disabling hardware write protect.

Micron Technology, Inc., reserves the right to change products or specifications without notice.
©2008 Micron Technology, Inc. All rights reserved

Electrical Specifications

Stresses greater than those listed in Table 6 may cause permanent damage to the module. This is a stress rating only, and functional operation of the module at these or any other conditions outside those indicated in each device's data sheet is not implied. Exposure to absolute maximum rating conditions for extended periods may adversely affect reliability.

Table 6: Absolute Maximum Ratings

Symbol	Parameter	Min	Max	Units
V_{DD}	V_{DD} supply voltage relative to V_{SS}	–0.4	+1.975	V
V_{IN}, V_{OUT}	Voltage on any pin relative to V_{SS}	–0.4	+1.975	V

Table 7: Operating Conditions

Symbol	Parameter		Min	Nom	Max	Units	Notes
V_{DD}	V_{DD} supply voltage		1.425	1.5	1.575	V	
I_{VTT}	Termination reference current from V_{TT}		–600	–	+600	mA	
V_{TT}	Termination reference voltage (DC) – command/address bus		0.49 × V_{DD} - 20mV	0.5 × V_{DD}	0.51 × V_{DD} + 20mV	V	1
I_I	Input leakage current; Any input 0V ≤ V_{IN} ≤ V_{DD}; V_{REF} input 0V ≤ V_{IN} ≤ 0.95V (All other pins not under test = 0V)	Address inputs, RAS#, CAS#, WE#, BA	–32	0	+32	µA	
		S#, CKE, ODT, CK, CK#	–16	0	+16		
I_{OZ}	Output leakage current; 0V ≤ V_{OUT} ≤ V_{DDQ}; DQ and ODT are disabled; ODT is HIGH	DQ, DQS, DQS#	–5	0	+5	µA	
I_{VREF}	V_{REF} supply leakage current; V_{REFDQ} = V_{DD}/2 or V_{REFCA} = V_{DD}/2 (All other pins not under test = 0V)		–9	0	+9	µA	
T_A	Module ambient operating temperature	Commercial	0	–	+70	°C	2, 3
		Industrial	–40	–	+85	°C	
T_C	DDR3 SDRAM component case operating temperature	Commercial	0	–	+85	°C	2, 3, 4
		Industrial	–40	–	+95	°C	

Notes:
1. V_{TT} termination voltage in excess of the stated limit will adversely affect the command and address signals' voltage margin and will reduce timing margins.
2. T_A and T_C are simultaneous requirements.
3. For further information, refer to technical note TN-00-08: "Thermal Applications," available on Micron's Web site.
4. The refresh rate is required to double when 85°C < T_C ≤ 95°C.

Micron Technology, Inc., reserves the right to change products or specifications without notice.
©2008 Micron Technology, Inc. All rights reserved

DRAM Operating Conditions

Recommended AC operating conditions are given in the DDR3 component data sheets. Component specifications are available on Micron's Web site. Module speed grades correlate with component speed grades, as shown in Table 8.

Table 8: Module and Component Speed Grades
DDR3 components may exceed the listed module speed grades

Module Speed Grade	Component Speed Grade
-1G5	-15F
-1G4	-15E
-1G3	-15
-1G1	-187E
-1G0	-187
-80C	-25E
-80B	-25

Design Considerations

Simulations

Micron memory modules are designed to optimize signal integrity through carefully designed terminations, controlled board impedances, routing topologies, trace length matching, and decoupling. However, good signal integrity starts at the system level. Micron encourages designers to simulate the signal characteristics of the system's memory bus to ensure adequate signal integrity of the entire memory system.

Power

Operating voltages are specified at the DRAM, not at the edge connector of the module. Designers must account for any system voltage drops at anticipated power levels to ensure the required supply voltage is maintained.

Micron Technology, Inc., reserves the right to change products or specifications without notice.
©2008 Micron Technology, Inc. All rights reserved

IDD Specifications

Table 9: DDR3 IDD Specifications and Conditions – 1GB
Values are for the MT41J128M8 DDR3 SDRAM only and are computed from values specified in the 1Gb (128 Meg x 8) component data sheet

Parameter	Symbol	1333	1066	800	Units
Operating current 0: One bank ACTIVATE-to-PRECHARGE	IDD0	990	900	810	mA
Operating current 1: One bank ACTIVATE-to-READ-to-PRECHARGE	IDD1	1,170	990	990	mA
Precharge power-down current: Slow exit	IDD2P	225	225	225	mA
Precharge power-down current: Fast exit	IDD2P	90	90	90	mA
Precharge quiet standby current	IDD2Q	450	405	360	mA
Precharge standby current	IDD2N	495	450	405	mA
Active power-down current	IDD3P	315	270	225	mA
Active standby current	IDD3N	540	495	450	mA
Burst read operating current	IDD4R	1,800	1,440	1,170	mA
Burst write operating current	IDD4W	1,710	1,440	1,170	mA
Refresh current	IDD5B	2,160	1,980	1,800	mA
Self refresh temperature current: MAX T_C = 85°C	IDD6	54	54	54	mA
Self refresh temperature current (SRT-enabled): MAX T_C = 95°C	IDD6ET	81	81	81	mA
All banks interleaved read current	IDD7	4,410	3,510	3,150	mA

Micron Technology, Inc., reserves the right to change products or specifications without notice.
©2008 Micron Technology, Inc. All rights reserved

Temperature Sensor with Serial Presence-Detect EEPROM

The temperature sensor continuously monitors the module's temperature and can be read back at any time over the I^2C bus shared with the SPD EEPROM.

Table 10: Temperature Sensor with Serial Presence-Detect EEPROM Operating Conditions

Parameter/Condition	Symbol	Min	Max	Units
Supply voltage	V_{DDSPD}	+3.0	+3.6	V
Supply current: V_{DD} = 3.3V	I_{DD}	–	+2.0	mA
Input high voltage: Logic 1; SCL, SDA	V_{IH}	+1.45	V_{DDSPD} + 1	V
Input low voltage: Logic 0; SCL, SDA	V_{IL}	–	+0.55	V
Output low voltage: I_{OUT} = 2.1mA	V_{OL}	–	+0.4	V
Input current	I_{IN}	–5.0	+5.0	µA
Temperature sensing range	–	–40	+125	°C
Temperature sensor accuracy (initial release)	–	–2.0	+2.0	°C
Temperature sensor accuracy	–	–1.0	+1.0	°C

Table 11: Sensor and EEPROM Serial Interface Timing

Parameter/Condition	Symbol	Min	Max	Units
Time bus must be free before a new transition can start	t_{BUF}	4.7	–	µs
SDA fall time	t_F	20	300	ns
SDA rise time	t_R	–	1,000	ns
Data hold time	$t_{HD:DAT}$	200	900	ns
Start condition hold time	$t_{H:STA}$	4.0	–	µs
Clock HIGH period	t_{HIGH}	4.0	50	µs
Clock LOW period	t_{LOW}	4.7	–	µs
SCL clock frequency	f_{SCL}	10	100	kHz
Data setup time	$t_{SU:DAT}$	250	–	ns
Start condition setup time	$t_{SU:STA}$	4.7	–	µs
Stop condition setup time	$t_{SU:STO}$	4.0	–	µs

EVENT# Pin

The temperature sensor also adds the EVENT# pin (open drain). Not used by the SPD EEPROM, EVENT# is a temperature sensor output used to flag critical events that can be set up in the sensor's configuration register.

EVENT# has three defined modes of operation: interrupt mode, compare mode, and critical temperature mode. The open-drain output of EVENT# under the three separate operating modes is illustrated in Figure 3 on page 13. Event thresholds are programmed in the 0x01 register using a hysteresis. The alarm window provides a comparison window, with upper and lower limits set in the alarm upper boundary register and the alarm lower boundary register, respectively. When the alarm window is enabled, EVENT# will trigger whenever the temperature is outside the MIN or MAX values set by the user.

Micron Technology, Inc., reserves the right to change products or specifications without notice.
©2008 Micron Technology, Inc. All rights reserved

The interrupt mode enables software to reset EVENT# after a critical temperature threshold has been detected. Threshold points are set in the configuration register by the user. This mode triggers the critical temperature limit and both the MIN and MAX of the temperature window.

The compare mode is similar to the interrupt mode, except EVENT# cannot be reset by the user and only returns to the logic HIGH state when the temperature falls below the programmed thresholds.

Critical temperature mode triggers EVENT# only when the temperature has exceeded the programmed critical trip point. When the critical trip point has been reached, the temperature sensor goes into comparator mode, and the critical EVENT# cannot be cleared through software.

SM Bus Slave Subaddress Decoding

The temperature sensor's physical address differs from the SPD EEPROM's physical address: 0011 for A0, A1, A2, and RW# in binary where A2, A1, and A0 are the three slave subaddress pins and the RW# bit is the READ/WRITE flag.

If the slave base address is fixed for the temperature sensor/SPD EEPROM, then the pins set the subaddress bits of the slave address, enabling the devices to be located anywhere within the eight slave address locations. For example, they could be set from 30h to 3Eh.

Figure 3: EVENT# Pin Functionality

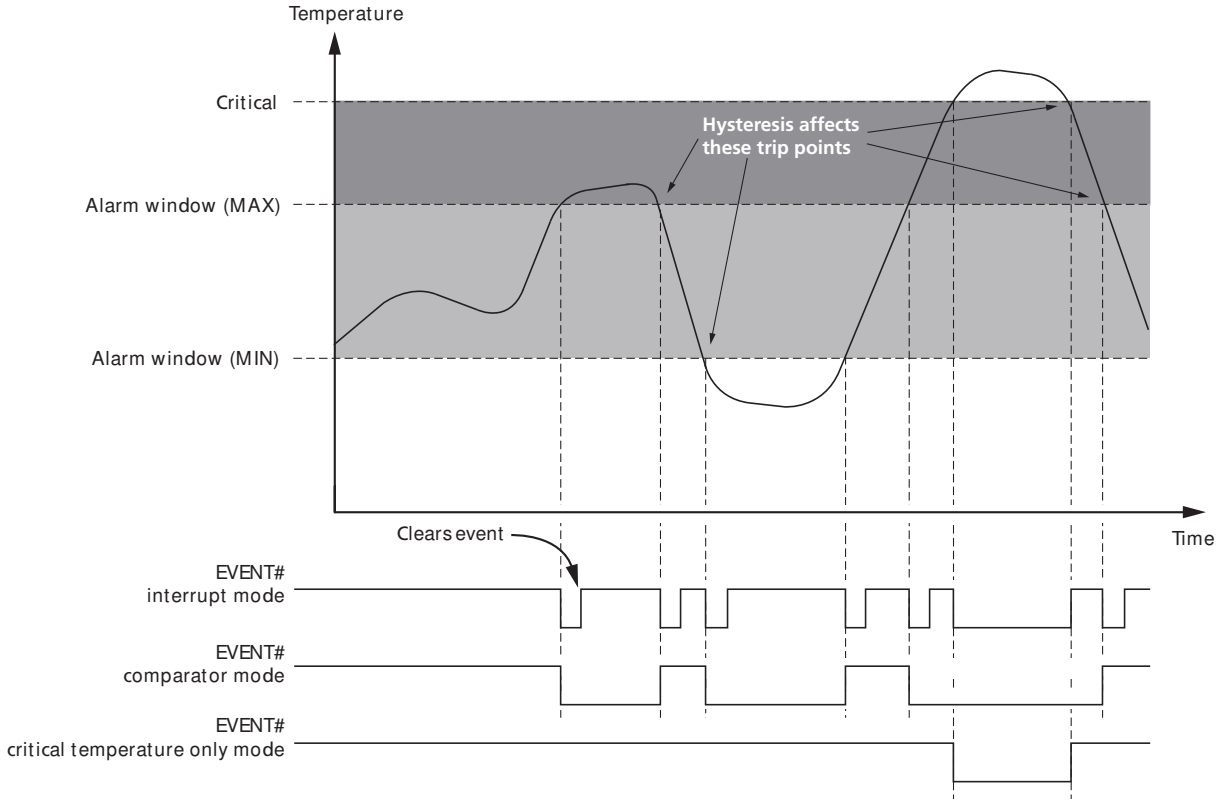

Micron Technology, Inc., reserves the right to change products or specifications without notice.
©2008 Micron Technology, Inc. All rights reserved

Table 12: Temperature Sensor Registers

Name	Address	Power-On Default
Pointer register	Not applicable	Undefined
Capability register	0x00	0x0001
Configuration register	0x01	0x0000
Alarm temperature upper boundary register	0x02	0x0000
Alarm temperature lower boundary register	0x03	0x0000
Critical temperature register	0x04	0x0000
Temperature register	0x05	Undefined

Pointer Register

The pointer register selects which of the 16-bit registers is being accessed in subsequent READ and WRITE operations. This register is a write-only register.

Table 13: Pointer Register Bits 0–7

Bit							
7	6	5	4	3	2	1	0
0	0	0	0	Register select	Register select	Register select	Register select

Table 14: Pointer Register Bits 0–2 Descriptions

Bit			Register
2	1	0	
0	0	0	Capability register
0	0	1	Configuration register
0	1	0	Alarm temperature upper boundary register
0	1	1	Alarm temperature lower boundary register
1	0	0	Critical temperature register
1	0	1	Temperature register

Capability Register

The capability register indicates the features and functionality supported by the temperature sensor. This register is a read-only register.

Table 15: Capability Register (Address: 0x00)

Bit							
15	14	13	12	11	10	9	8
RFU	RFU	RFU	RFU	RFU	RFU	RFU	RFU
Bit							
7	6	5	4	3	2	1	0
RFU	RFU	RFU	Temperature resolution		Wider range	Precision	Has alarm and critical temperature

Micron Technology, Inc., reserves the right to change products or specifications without notice.
©2008 Micron Technology, Inc. All rights reserved

Table 16: Capability Register Bit Descriptions

Bit	Description
0	Basic capability 1: Has alarm and critical trip point capabilities
1	Accuracy 0: ±2°C over the active range and ±3°C over the monitor range 1: ±1°C over the active range and ±2°C over the monitor range
2	Wider range 0: Temperatures lower than 0°C are clamped to a binary value of 0 1: Temperatures below 0°C can be read
4:3	Temperature resolution 00: 0.5°C LSB 01: 0.25°C LSB 10: 0.125°C LSB 11: 0.0625°C LSB
15:5	0: Must be set to zero

Configuration Register

Table 17: Configuration Register (Address: 0x01)

Bit							
15	**14**	**13**	**12**	**11**	**10**	**9**	**8**
RFU	RFU	RFU	RFU	RFU	Hysteresis		Shutdown mode
Bit							
7	**6**	**5**	**4**	**3**	**2**	**1**	**0**
Critical lock bit	Alarm lock bit	Clear event	Event output status	Event output control	Critical event only	Event polarity	Event mode

Table 18: Configuration Register Bit Descriptions

Bit	Description	Notes
0	Event mode 0: Comparator mode 1: Interrupt mode	Event mode cannot be changed if either of the lock bits is set.
1	EVENT# polarity 0: Active LOW 1: Active HIGH	EVENT# polarity cannot be changed if either of the lock bits is set.
2	Critical event only 0: EVENT# trips on alarm or critical temperature event 1: EVENT# trips only if critical temperature is reached	
3	Event output control 0: Event output disabled 1: Event output enabled	
4	Event status 0: EVENT# has not been asserted by this device 1: EVENT# is being asserted due to an alarm window or critical temperature condition	This is a read-only field in the register. The event causing the event can be determined from the read temperature register.

Micron Technology, Inc., reserves the right to change products or specifications without notice.
©2008 Micron Technology, Inc. All rights reserved

Table 18: Configuration Register Bit Descriptions (continued)

Bit	Description	Notes
5	Clear event 0: No effect 1: Clears the event when the temperature sensor is in the interrupt mode	
6	Alarm window lock bit 0: Alarm trips are not locked and can be changed 1: Alarm trips are locked and cannot be changed	
7	Critical trip lock bit 0: Critical trip is not locked and can be changed 1: Critical trip is locked and cannot be changed	
8	Shutdown mode 0: Enabled 1: Shutdown	The shutdown mode is a power-saving mode that disables the temperature sensor.
10:9	Hysteresis enable 00: Disable 01: Enable at 1.5°C 10: Enable at 3°C 11: Enable at 6°C	When enabled, a hysteresis is applied to temperature movement around the trip points. As an example, if the hysteresis register is enabled to a delta of 6°C, the preset trip points will toggle when the temperature reaches the programmed value. These values will reset when the temperature drops below the trip points minus the set hysteresis level; In this case, this would be critical temperature minus 6°C. The hysteresis is applied both to the above alarm window and the below alarm window bits found in the read-only temperature register. EVENT# is also affected by this register.

Figure 4: Hysteresis

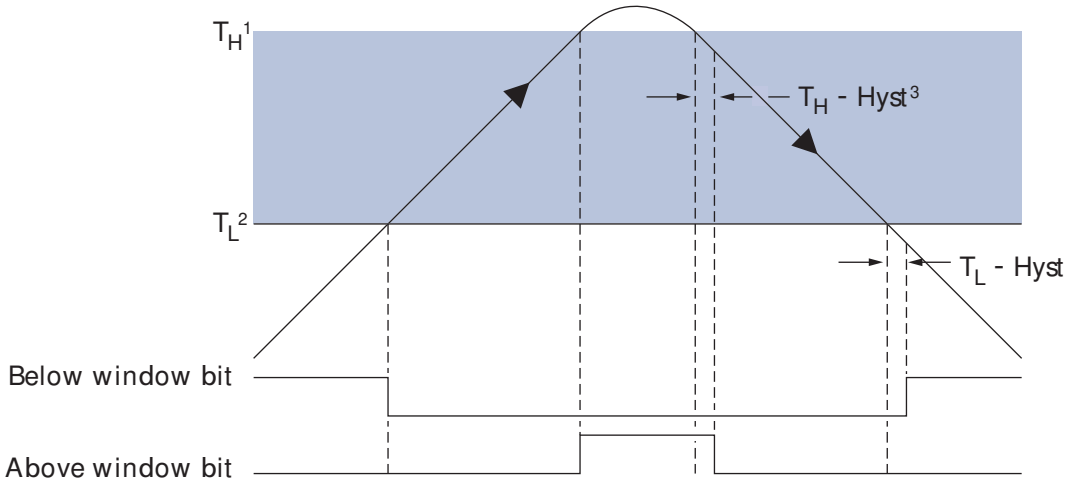

Notes:
1. T_H is the value set in the alarm temperature upper boundary trip register.
2. T_L is the value set in the alarm temperature lower boundary trip register.
3. Hyst is the value set in the hysteresis bits of the configuration register.

Micron Technology, Inc., reserves the right to change products or specifications without notice.
©2008 Micron Technology, Inc. All rights reserved

Table 19: Hysteresis

Condition	Below Alarm Window Bit		Above Alarm Window Bit	
	Temperature Gradient	Critical Temperature	Temperature Gradient	Critical Temperature
Sets	Falling	T_L - Hyst	Rising	T_H
Clears	Rising	T_L	Falling	T_H - Hyst

Temperature Format

The temperature trip point registers and temperature readout register use a "2's complement" format to enable negative numbers. The least significant bit (LSB) is equal to 0.0625°C or 0.25°C depending on which register is referenced. As an example, assuming an LSB of 0.0625°C:

- A value of 0x018C would equal 24.75°C
- A value of 0x06C0 would equal 108°C
- A value of 0x1E74 would equal –24.75°C

Temperature Trip Point Registers

The upper and lower temperature boundary registers are used to set the maximum and minimum values of the alarm window. LSB for these registers is 0.25°C. All RFU bits in the register will always report zero.

Table 20: Alarm Temperature Lower Boundary Register (Address: 0x02)

Bit														
15	14	13	12	11	10	9	8	7	6	5	4	3	2	1	0
0	0	0	MSB										LSB	RFU	RFU
			Alarm window upper boundary temperature												

Table 21: Alarm Temperature Lower Boundary Register (Address: 0x03)

Bit														
15	14	13	12	11	10	9	8	7	6	5	4	3	2	1	0
0	0	0	MSB										LSB	RFU	RFU
			Alarm window lower boundary temperature												

Critical Temperature Register

The critical temperature register is used to set the maximum temperature above the alarm window. The LSB for this register is 0.25°C. All RFU bits in the register will always report zero.

Table 22: Critical Temperature Register (Address: 0x04)

Bit														
15	14	13	12	11	10	9	8	7	6	5	4	3	2	1	0
0	0	0	MSB										LSB	RFU	RFU
			Critical temperature trip point												

Micron Technology, Inc., reserves the right to change products or specifications without notice.
©2008 Micron Technology, Inc. All rights reserved

Temperature Register

The temperature register is a read-only register that provides the current temperature detected by the temperature sensor. The LSB for this register is 0.0625°C with a resolution of 0.0625°C. The most significant bit (MSB) is 128°C in the readout section of this register.

The upper three bits of the register are used to monitor the trip points that are set in the previous three registers.

Table 23: Temperature Register (Address: 0x05)

Bit															
15	14	13	12	11	10	9	8	7	6	5	4	3	2	1	0
Above critical trip	Above alarm window	Below alarm window	MSB												LSB
			Temperature												

Table 24: Temperature Register Bit Descriptions

Bit	Description
13	Below alarm window 0: Temperature is equal to or above the lower boundary 1: Temperature is below alarm window
14	Above alarm window 0: Temperature is equal to or below the upper boundary 1: Temperature is above alarm window
15	Above critical trip point 0: Temperature is below critical trip point 1: Temperature is above critical trip point

Serial Presence-Detect Data

For the latest serial presence-detect data, refer to Micron's SPD page: www.micron.com/SPD.

Micron Technology, Inc., reserves the right to change products or specifications without notice.
©2008 Micron Technology, Inc. All rights reserved

Module Dimensions

Figure 5: 240-Pin DDR3 UDIMM

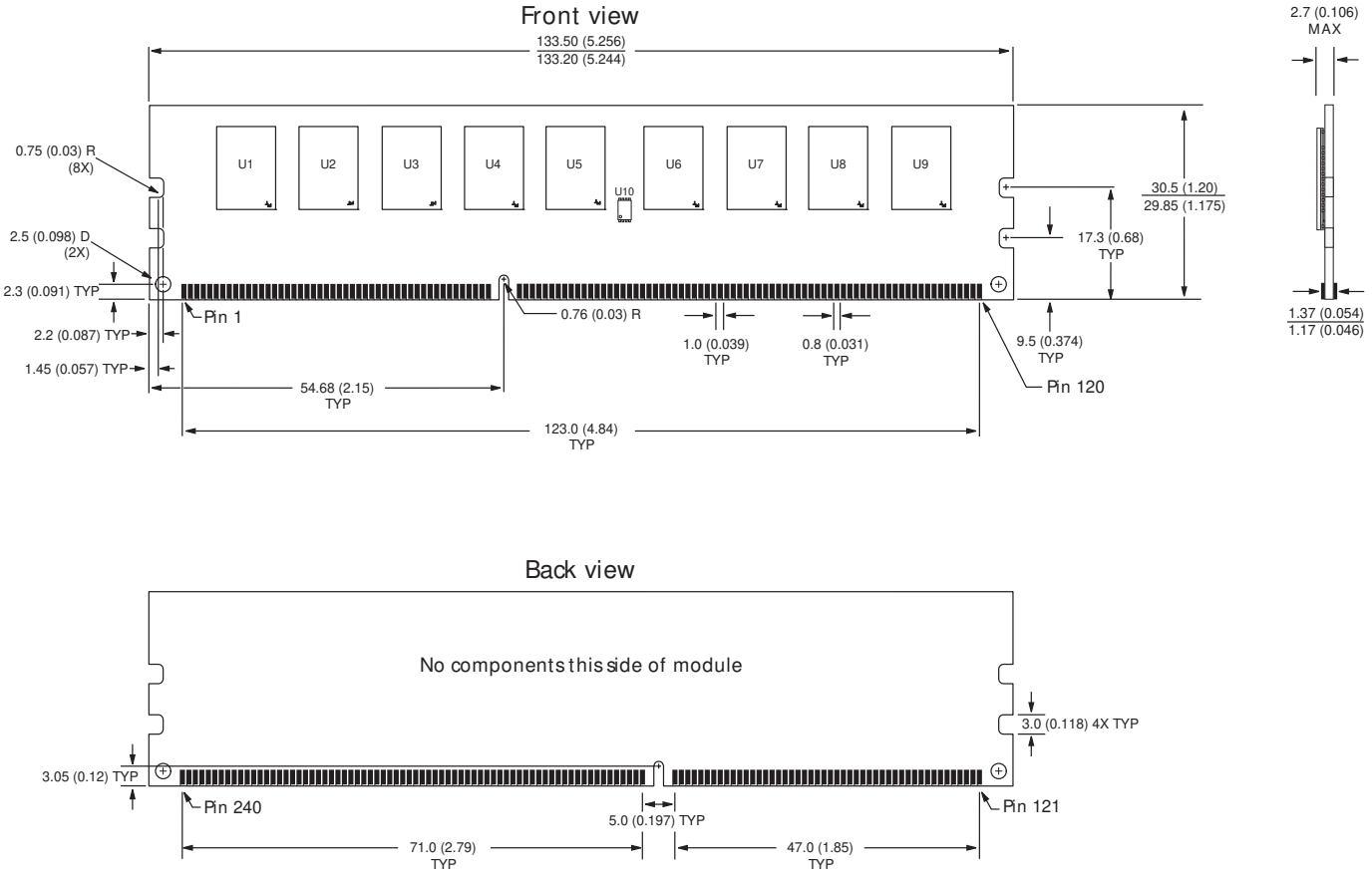

Notes:
1. All dimensions are in millimeters (inches); MAX/MIN or typical (TYP) where noted.
2. The dimensional diagram is for reference only.

8000 S. Federal Way, P.O. Box 6, Boise, ID 83707-0006, Tel: 208-368-3900
prodmktg@micron.com www.micron.com Customer Comment Line: 800-932-4992
Micron, the M logo, and the Micron logo are trademarks of Micron Technology, Inc. All other trademarks are the property of their respective owners.
This data sheet contains minimum and maximum limits specified over the power supply and temperature range set forth herein. Although considered final, these specifications are subject to change, as further product development and data characterization sometimes occur.

Micron Technology, Inc., reserves the right to change products or specifications without notice.
©2008 Micron Technology, Inc. All rights reserved.