RealSSD™ Embedded USB Mass Storage Drive

MTFDCAE001SAF, MTFDCAE002SAF, MTFDCAE004SAF, MTFDCAE008SAF

Features

- Micron® NAND Flash
- Interface: Universal Serial Bus (USB) Specification, Revision 2.0
- USB support
  - USB Specification, Revisions 2.0, 1.1
  - USB Mass Storage Class Specification, Revision 1.0
- Performance
  - Sequential READ: 33 MB/s[1]
  - Sequential WRITE: 22 MB/s[1]
- Reliability: 4 million operating hours mean time between failures (MTBF)
- Endurance: useful operating life of at least 5 years under the following conditions:
  - 8760 power-on hours per year
  - Active 100% of power-on hours
  - Typical operating conditions[2]
    - 1GB module—8 GB/day
    - 2GB module—16 GB/day
    - 4GB module—32 GB/day
    - 8GB module—64 GB/day
- Static and dynamic wear-leveling
- 8-symbol error correction code (ECC)
- Password protection
- Reliability reporting

Options

- Capacity (unformatted): 1GB, 2GB, 4GB, or 8GB[3]
- Form factor
  - Standard (36.9mm x 26.6mm x 9.6mm)
- Voltage: 5V ±5%
- Operating temperature
  - Commercial (0°C to +70°C)
  - Industrial (–40°C to +85°C)

Notes: 1. Typical transfer rate measured with H2BENCH 3.6.
2. Assumes that 70% of total usable drive capacity contains static files.
3. 1GB = 1 billion bytes; formatted capacity is less.

Micron Technology, Inc., reserves the right to change products or specifications without notice.
©2007 Micron Technology, Inc. All rights reserved.
Products and specifications discussed herein are subject to change by Micron without notice.

Part Numbering Information

Micron Real*SSD* embedded USB drives are available in several configurations and densities. Visit micron.com for a list of valid part numbers.

Figure 1: Part Number Chart

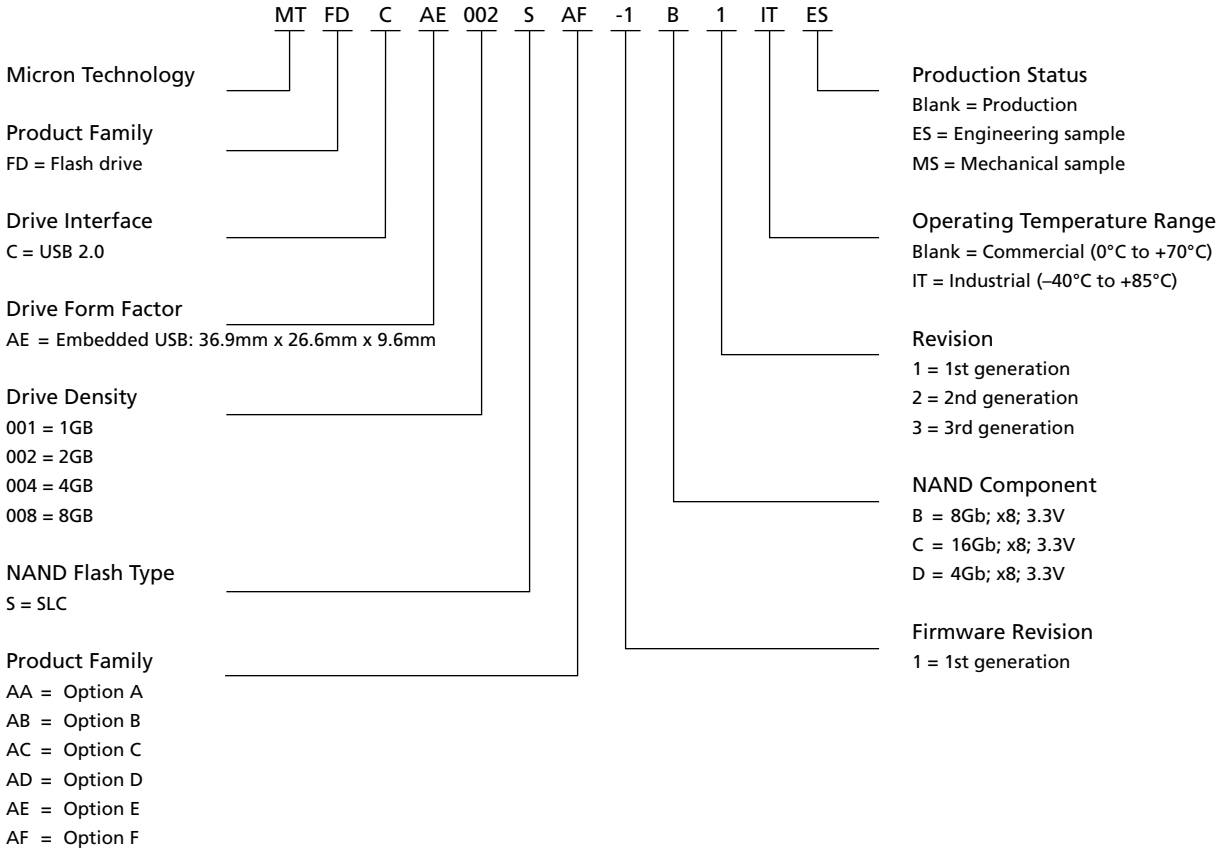

Micron Technology, Inc., reserves the right to change products or specifications without notice.
©2007 Micron Technology, Inc. All rights reserved.

General Description

Micron's Real*SSD*™ embedded universal serial bus (USB) mass storage drives provide 1GB, 2GB, 4GB, or 8GB of USB 2.0-compatible memory storage in a small form factor. The embedded USB drive is an ideal solution for applications that require low cost and high reliability. Typical applications include PC caching and boot drives for embedded computing, server, and networking systems.

High performance, reliability, and easy implementation make Micron's Real*SSD* embedded USBs an ideal storage solution. To consistently deliver the best possible performance, the embedded USB uses only SLC NAND Flash, and all densities use two x8 NAND channels to the controller. In addition to being fast, SLC NAND Flash offers solid reliability, coupled with ECC and wear-leveling. The USB system interface is widely available in many system designs and is easy to implement, enabling rapid time to market.

The embedded USB consists of two TSOP-packaged Micron NAND Flash components, a USB controller, and a 10-pin USB connector on a PCB. Different densities are available depending on the number of die in each package and the density of each NAND Flash die (see Figure 2). The drive operates at 5V ±5%. It uses industry-standard 10-pin connectors and supports USB Specification, Revision 2.0. It is also backward compatible with Revision 1.1 and can be used with operating systems that support USB Mass Storage Class Specification, Revision 1.0.

Figure 2: Functional Block Diagram

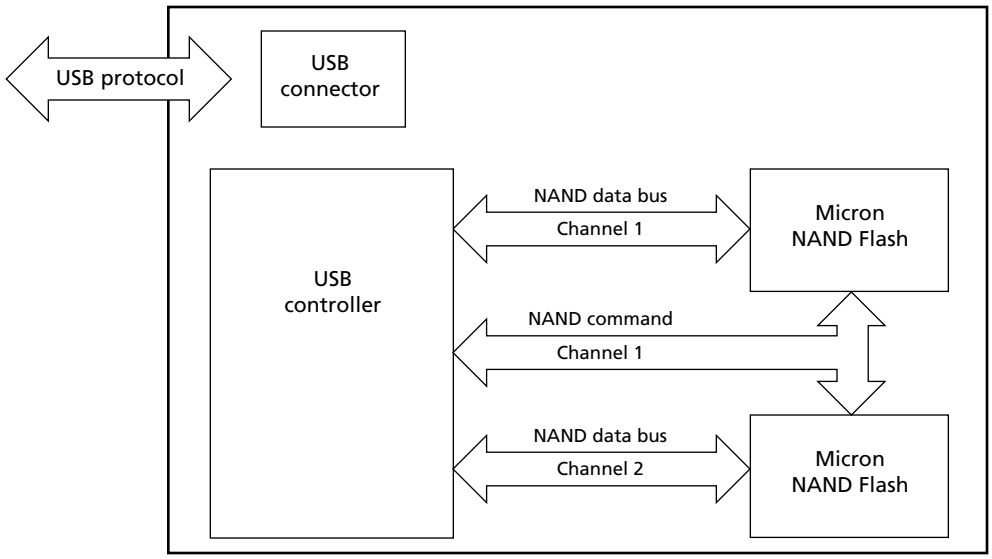

Micron Technology, Inc., reserves the right to change products or specifications without notice.
©2007 Micron Technology, Inc. All rights reserved.

Table 1: Nominal Package Dimensions, Density, and Weight

Dimension	Value	Unit
Height	9.6	mm
Width	26.6	mm
Length	36.9	mm
Density	1, 2, 4, 8	GB
Maximum unit weight	4.5	g

Figure 3: Pin Assignments: 2 x 5 Connector

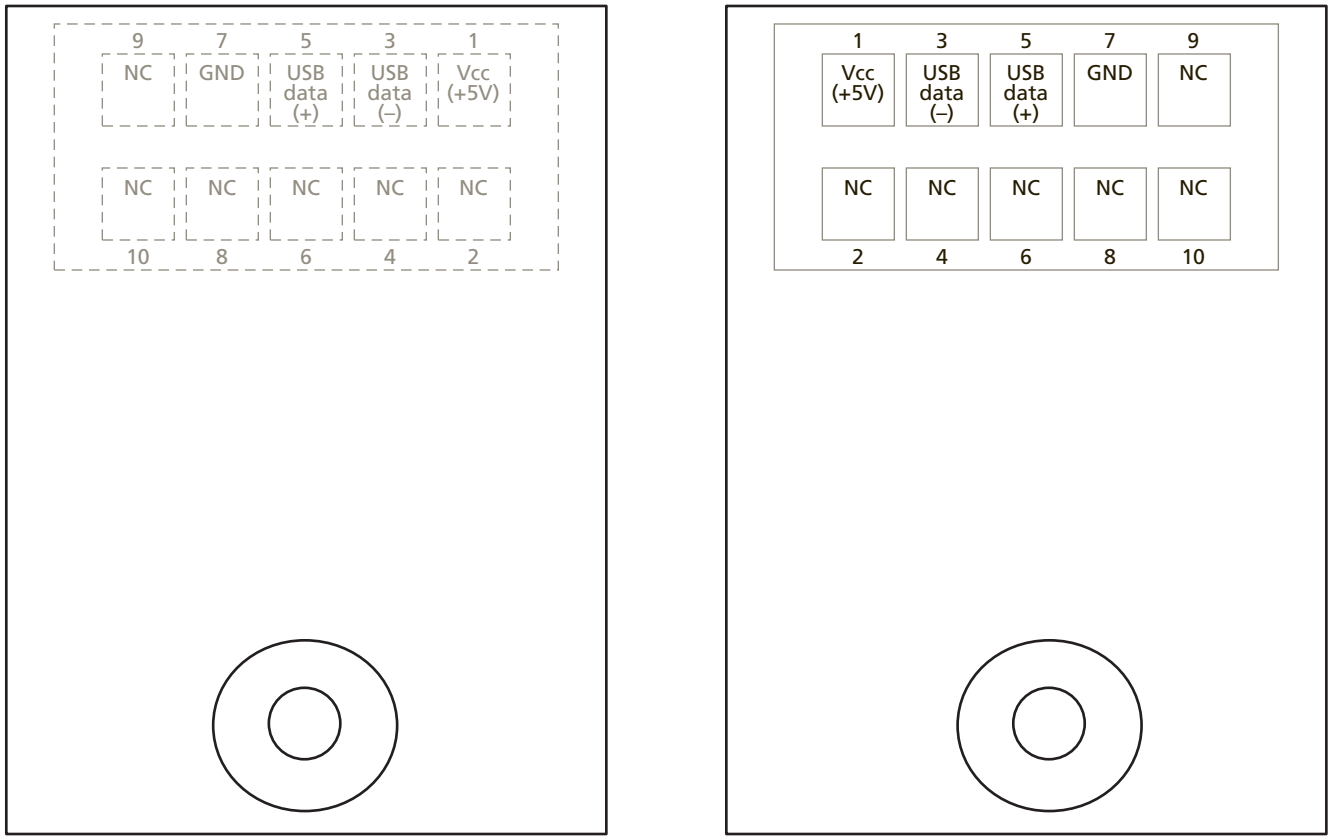

Top view (through PCB) Bottom view

Notes: 1. Diagram not to scale.

Table 2: Signal/Pin Descriptions

Symbol	Type	Function
USB data (+), USB data (–)	I/O	Data inputs/outputs: The bidirectional I/Os transfer address, data, and instruction information. Data is output only during READ operations; at other times the I/Os are inputs.
Vcc	Supply	Vcc power supply pin.
Vss	Supply	Vss ground connection.
NC	–	No connect: NC pins are not internally connected. These pins can be driven or left floating.

Micron Technology, Inc., reserves the right to change products or specifications without notice.
©2007 Micron Technology, Inc. All rights reserved.

Error Management

The Real*SSD* embedded USB incorporates advanced technology for defect and error management. It uses various combinations of hardware-based error correction algorithms and firmware-based wear-leveling algorithms.

Over the life of the drive, uncorrectable errors may occur. An uncorrectable error is defined as data that is reported as successfully programmed to the drive, but when it is read out of the drive, the data differs from what was programmed. See Table 4 for the uncorrectable bit error rate.

The mean time between failures (MTBF) can be predicted based on component reliability data obtained by following the methods referenced in the Telecordia SR-332 reliability prediction procedures for electronic equipment.

Table 3: System Reliability

Density	MTBF (Operating Hours)
1GB	4.8 million
2GB	4.7 million
4GB	4.4 million
8GB	4.0 million

Table 4: Uncorrectable Bit Error Rate

Uncorrectable Bit Error Rate (BER)[1]	Operation
<1 bit error in 10^{15} bits	READ

Notes: 1. BER is measured with a WRITE-to-READ ratio of 1:1.

Electrical Characteristics

Stresses greater than those listed may cause permanent damage to the drive. This is a stress rating only, and functional operation of the drive at these or any other conditions above those indicated in the operational sections of this specification is not implied. Exposure to absolute maximum rating conditions for extended periods may affect reliability.

Table 5: Absolute Maximum Ratings

Parameter/Condition	Symbol	Min	Max	Unit
Vcc supply voltage	Vcc	–0.6	5.25	V

Table 6: DC and Operating Characteristics

Parameter	Symbol	Min	Typ	Max	Unit	Condition
Standby current	Isb	–	50	60	mA	Vcc = 5V
Active current	Icc1	–	100	120	mA	Vcc = 5V

Micron Technology, Inc., reserves the right to change products or specifications without notice.
©2007 Micron Technology, Inc. All rights reserved.

Table 7: Recommended Operating Conditions

Parameter/Condition		Symbol	Min	Typ	Max	Unit
Operating temperature	Commercial	T_A	0	–	70	°C
	Industrial		–40	–	85	°C
Vcc supply voltage		Vcc	4.75	5.00	5.25	V
Ground supply voltage		Vss	0	0	0	V

Table 8: Shock and Vibration

Parameter/Condition	Specification
Shock	500 G/1ms
Vibration	5–50Hz at 3.1G

Compliance

Micron Real*SSD* embedded USB drives comply with the following requirements:

- CE (Europe): EN55022, 2006 Class B and EN55024, 1998 + A1: 2001 + A2:2003
- FCC: CFR Title 47, Part 15, ICES-003, all Class B
- CSA (Canada): CSA 22.2 60950-1-07, 2nd Edition, 2007-03
- UL (US): approval to UL-60950-1, 2nd Edition, 2007-03-27, IEC 60950-1:2005, 2nd Edition
- RoHS, "green" package

Mechanical Information

The 10-pin (2 x 5) female electrical connector has a height of 7.4mm, a pitch of 2.54 mm, and supports the standard USB 2.0 interface. A mounting hole is also provided on the PCB for a stable, reliable connection to the mounting board.

The motherboard pin headers listed in Table 9 are compatible with Micron's Real*SSD* embedded USB drives. Pin headers that are not listed may also be compatible.

Table 9: Compatible Pin Headers

Manufacturer	Part Number	Type
Pinrex	212-92-05GB01	SMT
	210-92-05GB01	Straight
Amtek	PHIFS25-205GB	Press fit
	PHIS25-205GB	Straight

Reference Documents

Reference documentation for the USB 2.0 standard (USB 2.0 specification, technical documents, compliance test procedures, and other related documents) can be found at www.usb.org/developers/docs.

Micron Technology, Inc., reserves the right to change products or specifications without notice.
©2007 Micron Technology, Inc. All rights reserved.

Package Dimensions

Figure 4: Embedded USB Package

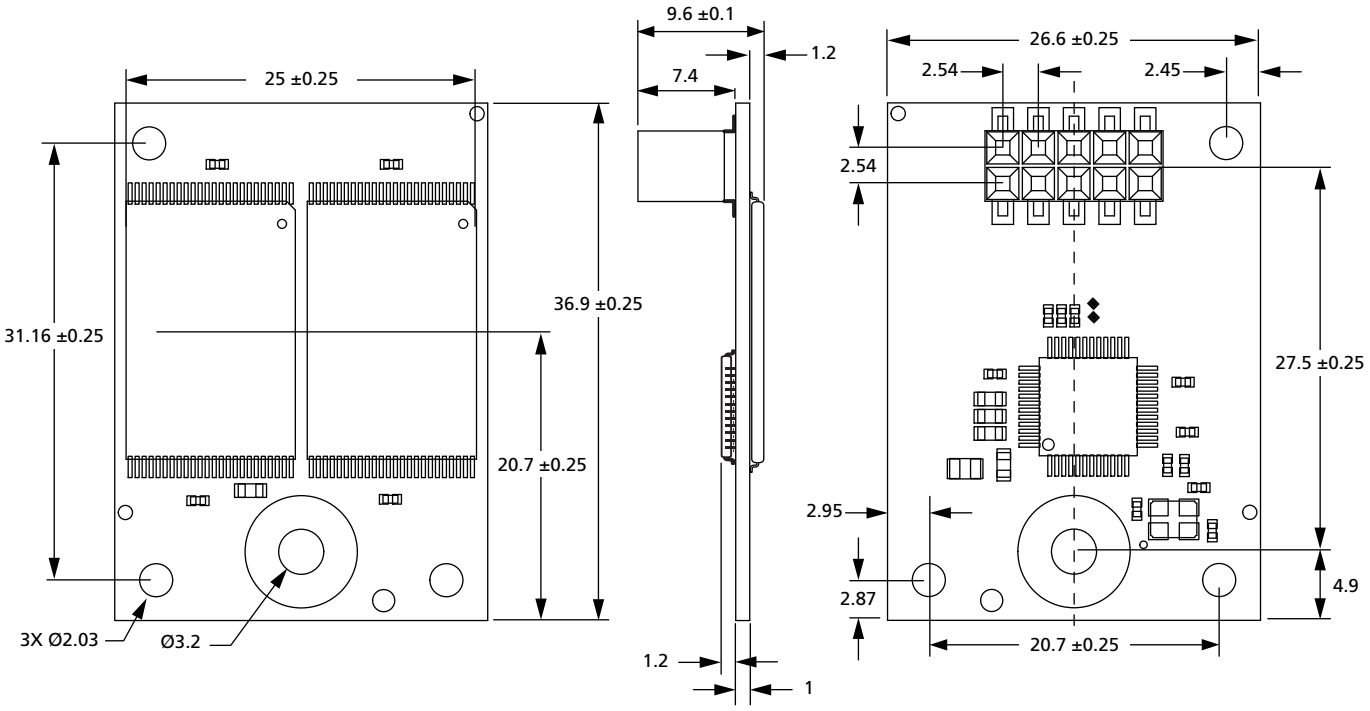

Note: All dimensions are in millimeters.

8000 S. Federal Way, P.O. Box 6, Boise, ID 83707-0006, Tel: 208-368-3900
www.micron.com/productsupport Customer Comment Line: 800-932-4992
Micron, the Micron logo, and RealSSD are trademarks of Micron Technology, Inc.
All other trademarks are the property of their respective owners.
This data sheet contains minimum and maximum limits specified over the power supply and temperature range set forth herein. Although considered final, these specifications are subject to change, as further product development and data characterization sometimes occur.

Micron Technology, Inc., reserves the right to change products or specifications without notice.
©2007 Micron Technology, Inc. All rights reserved.

Revision History

Rev. F, Production 2/09

- Updated "Compliance" section on page 6.
- Added Max values to Table 5.

Rev. E, Production 10/08

- Removed "Advance" from the document.
- "Features" on page 1: added "Password Protection" and "Reliability Reporting".
- "Note" on page 1: removed Note 2 and adjusted references to the other notes.

Rev. D, Advance 8/08

- Updated Table 8 on page 6. Removed "Operating" from both shock and vibration under the Parameter/Condition column. Changed shock specification from 500 G/2ms to 500 G/1ms.

Rev. C, Advance 5/08

- Figure 1: Part Number Chart on page 2: Updated NAND component section.

Rev. B, Advance 5/08

- Updated part numbers.
- "Features" on page 1: Updated typical operating conditions, performance, endurance.
- Figure 1: Part Number Chart on page 2: Updated for part number change.
- "Mechanical Information" on page 6: Added second paragraph and Table 9.

Rev. A, Advance 12/07

- Initial release

Micron Technology, Inc., reserves the right to change products or specifications without notice.
©2007 Micron Technology, Inc. All rights reserved.