FAIRCHILD
SEMICONDUCTOR®

T-1
SOLID STATE LAMPS

RED DIFFUSED	**MV5074C**	**RED DIFFUSED**	**MV5075C**
YELLOW DIFFUSED	**MV5374C**	**GREEN DIFFUSED**	**MV5474C**
HER DIFFUSED	**MV5774C**		

PACKAGE DIMENSIONS

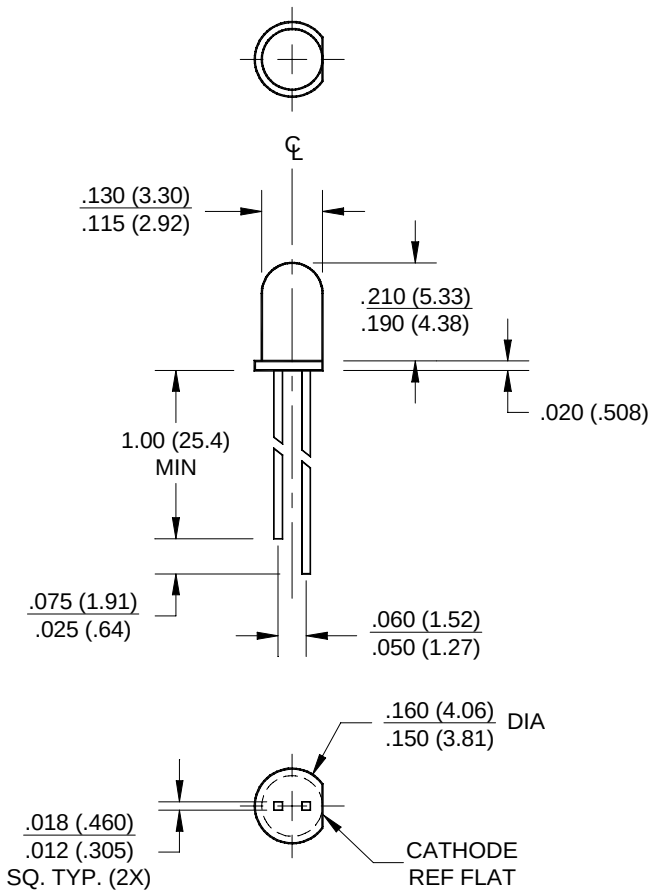

FEATURES

- Copper leads
- Solid-state reliability

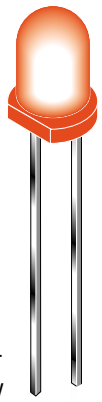

DESCRIPTION

These solid state indicators offer a variety of color selection. The High Efficiency Red, Green and Yellow devices are made with a gallium arsenide phosphide LED on gallium phosphide substrate. All are encapsulated in epoxy packages. Their small size (approximately T-1 size), good viewing angle, and small square leads contribute to their versatility as all purpose indicators.

© 2001 Fairchild Semiconductor Corporation

ABSOLUTE MAXIMUM RATING (T_A =25°C Unless Otherwise Specified)

Parameter	Symbol	Rating	Units
Power Dissipation	P_D	105	mW
Derate linearly from 25°C		-1.14	mW/°C
Continuous Forward Current (MV5374C=20 mA)	I_F	35	mA
Peak Forward Current - (μsec pulse 0.3% duty cycle) (MV5474C=90 mA) (MV5374C=60 mA)	I_{FM}	35	mA
Reverse Voltage (I_R = 100 μA)	V_R	5	V
Lead Soldering Time at 260°C (See Note 1)	T_{SOL}	5	sec
Operating Temperature	T_{OPR}	-55 to +100	°C
Storage Temperature	T_{STG}	-55 to +100	°C

ELECTRICAL / OPTICAL CHARACTERISTICS (T_A =25°C)

Part Number	Symbol	MV5074C	MV5075C	MV5374C	MV5474C	MV5774C	Condition
Luminous Intensity (mcd)							I_F = 20mA
Minimum	I_V	0.7	0.6	1.5	1.2	1.5	
Typical		2.5	1.5	9.0	9.0	9.0	
Forward Voltage (V)							I_F = 20mA
Typical	V_F	1.6	1.6	2.1	2.2	2.0	
Maximum		2.0	2.0	3.0	3.0	3.0	
Spectral Line Half Width (nm)		20	20	35	35	45	I_F = 20mA
Peak Wavelength (nm)	λp	660	660	585	565	635	I_F = 20mA
Reverse Current (μA)							V_R = 5.0V
Maximum		100	100	100	100	100	
Viewing Angle (Total) (°)	2θ 1/2	70	90	90	90	90	See Fig. 3

1. The leads of the device were immersed in molten solder at 260°C, to a point 1/16 inch (1.6 mm) from the body of the device per MIL-S-750, with a dwell time of 5 seconds.

TYPICAL PERFORMANCE CURVES (T_A =25°C)

Fig. 1 Forward Current vs. Forward Voltage

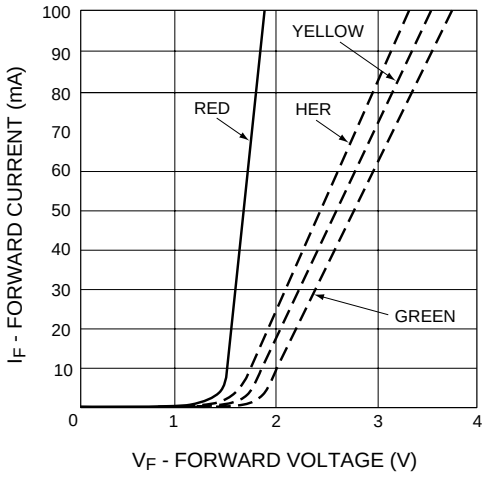

Fig. 2 Luminous Intensity vs. Forward Current

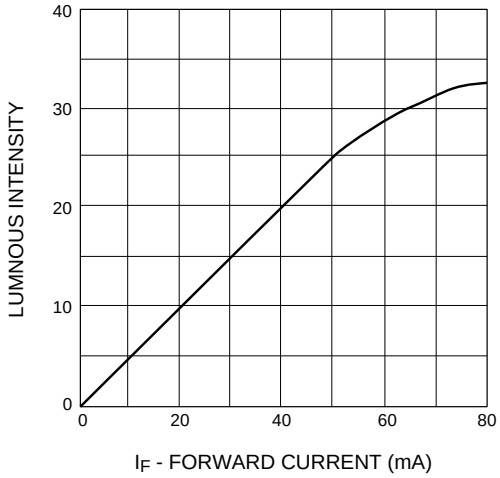

Fig. 3 Spatial Distribution

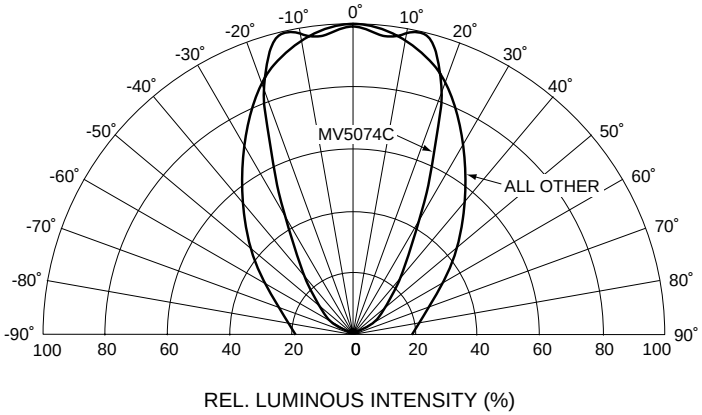

Fig. 4 Relative Intensity vs. Peak Wavelength

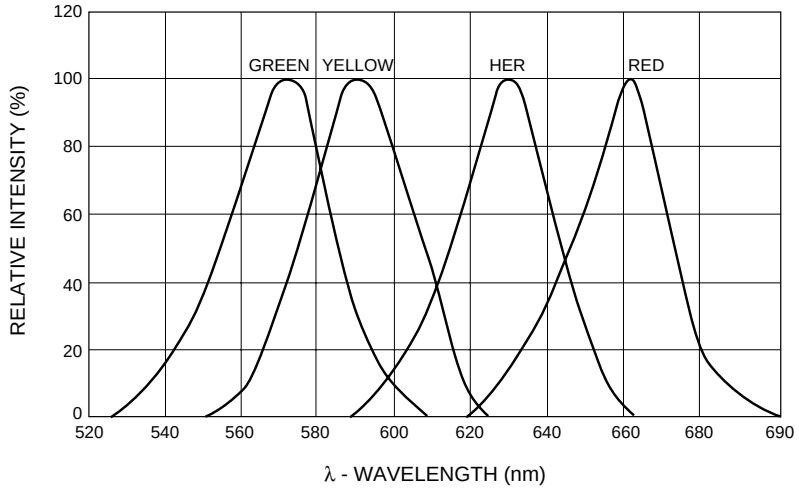

DISCLAIMER

FAIRCHILD SEMICONDUCTOR RESERVES THE THE RIGHT TO MAKE CHANGES WITHOUT FURTHER NOTICE TO ANY PRODUCTS HEREIN TO IMPROVE RELIABILITY, FUNCTION OR DESIGN. FAIRCHILD DOES NOT ASSUME ANY LIABILITY ARISING OUT OF THE APPLICATION OR USE OF ANY PRODUCT OR CIRCUIT DESCRIBED HEREIN; NEITHER DOES IT CONVEY ANY LICENSE UNDER ITS PATENT RIGHTS, NOR THE RIGHTS OF OTHERS.

LIFE SUPPORT POLICY

FAIRCHILD'S PRODUCTS ARE NOT AUTHORIZED FOR USE AS CRITICAL COMPONENTS IN LIFE SUPPORT DEVICES OR SYSTEMS WITHOUT THE EXPRESS WRITTEN APPROVAL OF THE PRESIDENT OF FAIRCHILD SEMICONDUCTOR CORPORATION. As used herein:

1. Life support devices or systems are devices or systems which, (a) are intended for surgical implant into the body,or (b) support or sustain life, and (c) whose failure to perform when properly used in accordance with instructions for use provided in labeling, can be reasonably expected to result in a significant injury of the user.
2. A critical component in any component of a life support device or system whose failure to perform can be reasonably expected to cause the failure of the life support device or system, or to affect its safety or effectiveness.