DATASHEET

ISM / LORA / LPWAN ANTENNAS

Aluminum Yagi Antennas, VHF, UHF & 800/900 MHz

ISM/LoRa/LPWAN Antennas – Yagi

MYA Series

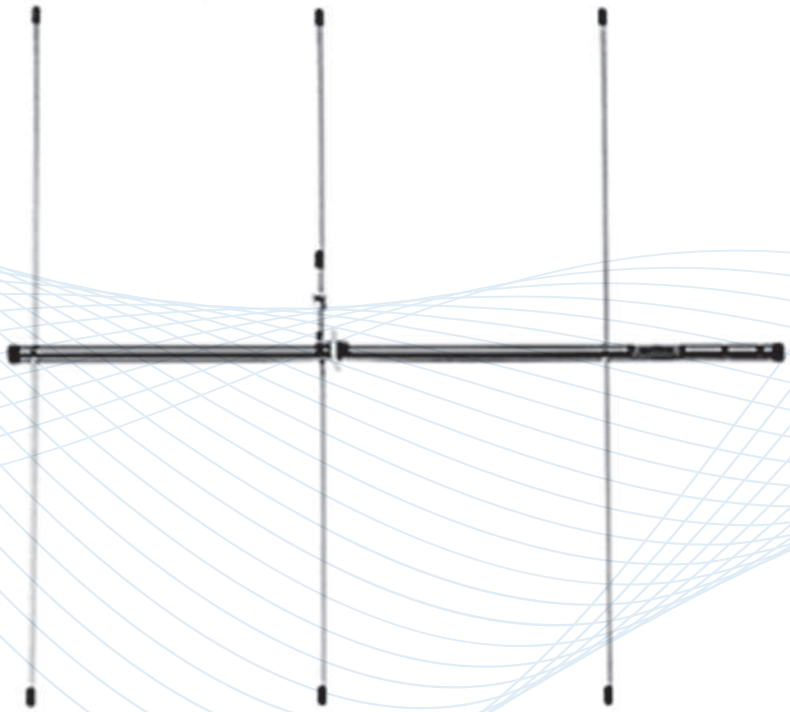

Description

Affordable and durable aluminum Yagi antennas for VFH and UHF industrial wireless applications.

Technologies

- VFH
- UHF

Features

- Wind Load Rating 100 mph stainless steel hardware
- Heavy-duty, double-walled aluminum boom
- DC grounded

PCTEL

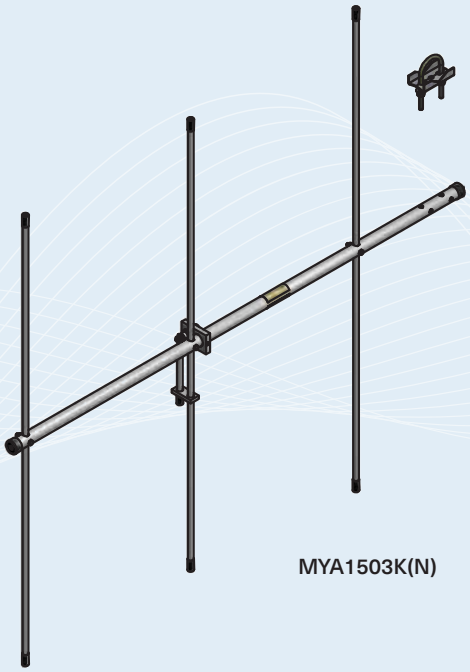

MYA1503K(N)

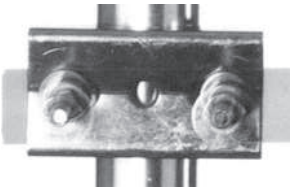

MYK1 Mount

Aluminum Yagi Antennas, VHF, UHF & 800/900 MHz

ISM/LoRa/LPWAN Antennas – Yagi

PCTEL's MYA Series of Yagi antennas are unsurpassed in their price-to-performance ratio. All models feature rugged 6061-T6 seamless aluminum construction, stainless steel hardware, and through-boom mounting of all elements for years of reliable service. Elements are DC grounded to the boom. These antennas are UPS shippable.

Features

- Stainless steel hardware
- Heavy-duty, double-walled aluminum boom
- DC grounded
- MYK1 mount
- Wind Load Rating 100 mph

Certifications

RoHS COMPLIANT

SPECIFICATIONS

Aluminum Yagi Antennas VHF, UHF & 800/900 MHz

ISM/LoRa/LPWAN Antennas – Yagi

Standard Configuration

Model	Connector	Elements
MYA1503K(N)[1]	SO239 standard, N Female is optional	3
MYA1505KN	SO239 standard, N Female is optional	5
MYA1506K	SO239 standard, N Female	6
MYA45012	SO239 standard, N Female is optional	12
MYA4503(N)	SO239 standard, N Female is optional	3
MYA4505(N)	SO239 standard, N Female is optional	5
MYA4506N	SO239 standard, N Female	6
MYA8063	N Female	3
MYA8066	N Female	6
MYA9153	N Female	3
MYA93012	N Female	12
MYA9303	N Female	3
MYA9306	N Female	6

Electrical Specifications - RF Antenna

Model	Frequency Range	Factory Tuned Frequency	Gain	Bandwidth @ 1.5:1 VSWR	Azimuth Half Power Beamwidth	Elevation Half Power Beamwidth	Front to Back Ratio	Maximum Power	Nominal Impedance
MYA1503K(N)[1]	150-174 MHz	150 MHz	9.2 dBi	0.7 MHz	72°	57°	17 dB	250 watts	50 ohms
MYA1505KN	150-174 MHz	150 MHz	11.3 dBi	1.3 MHz	56°	48°	20 dB	250 watts	50 ohms
MYA1506K	150-174 MHz	150 MHz	12.3 dBi	1.5 MHz	42°	40°	20 dB	250 watts	50 ohms
MYA45012	450-470 MHz	460 MHz	14.3 dBi	20 MHz	36°	34°	25 dB	250 watts	50 ohms
MYA4503(N)	450-470 MHz	460 MHz	9.2 dBi	20 MHz	72°	57°	17 dB	300 watts	50 ohms
MYA4505(N)	450-470 MHz	460 MHz	11.3 dBi	20 MHz	56°	48°	20 dB	300 watts	50 ohms
MYA4506N	450-470 MHz	460 MHz	12.3 dBi	20 MHz	42°	40°	20 dB	300 watts	
MYA8063	806-866 MHz	813 MHz	8.1 dBi	60 MHz	72°	57°	15 dB	100 watts	50 ohms
MYA8066	806-866 MHz	813 MHz	11.1 dBi	60 MHz	42°	40°	16 dB	100 watts	50 ohms
MYA9153	896-940 MHz	915 MHz	8.1 dBi	75 MHz	72°	57°	15 dB	100 watts	50 ohms
MYA93012	896-970 MHz	930 MHz	13.1 dBi	75 MHz	40°	42°	20 dB	100 watts	50 ohms
MYA9303	896-970 MHz	930 MHz	8.1 dBi	50 MHz	72°	57°	15 dB	100 watts	50 ohms
MYA9306	896-970 MHz	930 MHz	11.1 dBi	75 MHz	48°	56°	20 dB	100 watts	50 ohms

[1] Field tunable antennas. Suffix "N" indicates "N" connector.

SPECIFICATIONS

Aluminum Yagi Antennas
VHF, UHF & 800/900 MHz

ISM/LoRa/LPWAN Antennas – Yagi

Mechanical and Environmental Specifications

Model	Boom Length	Boom Diameter	Weight	Bending Moment at Rated Wind	Lateral Thrust at Rated Wind	Equivalent Flat Plate Area
MYA1503K(N)[1]	42"	7/8"	3 lbs (1.4 kg)	25.3 ft-lbs	14.5 lbs	.36 ft^2
MYA1505KN	72"	1-1/4"	4 lbs (1.8 kg)	82.7 ft-lbs	27.6 lbs	.71 ft^2
MYA1506K	104"	1-1/4"	5 lbs (2.27 kg)	160.6 ft-lbs	37.1 lbs	.96 ft^2
MYA45012	72"	1-1/4"	5 lbs (2.27 kg)	74.6 ft-lbs	24.9 lbs	.62 ft^2
MYA4503(N)	23"	7/8"	1.5 lbs (0.7 kg)	5.9 ft-lbs	6.1 lbs	.15 ft^2
MYA4505(N)	35.5"	7/8"	2.0 lbs (0.9 kg)	12.6 ft-lbs	9.3 lbs	.23 ft^2
MYA4506N	42"	7/8"	2.5 lbs (1.1 kg)	21.4 ft-lbs	12.2 lbs	.29 ft^2
MYA8063	17"	7/8"	1.5 lbs (0.7 kg)	4.6 ft-lbs	6.5 lbs	.10 ft^2
MYA8066	28"	7/8"	2 lbs (0.9 kg)	12.5 ft-lbs	10.7 lbs	.17 ft^2
MYA9153	17"	7/8"	1.5 lbs (1.5 kg)	4.2 ft-lbs	5.9 lbs	.09 ft^2
MYA93012	48"	7/8"	2.5 lbs (1.1 kg)	23.3 ft-lbs	16.6 lbs	.27 ft^2
MYA9303	17"	7/8"	1.5 lbs (0.7 kg)	4.2 ft-lbs	5.9 lbs	.09 ft^2
MYA9306	23"	7/8"	1.5 lbs (0.7 kg)	10.6 ft-lbs	9.1 lbs	.16 ft^2

CONTACT US

For more information about this product contact your sales representative or visit
> pctel.com/antenna-products

Solving Complex Wireless Challenges

PCTEL is a leading global provider of wireless technology solutions, including purpose-built Industrial IoT devices, antenna systems, and test and measurement products. Trusted by our customers for 29 years, we solve complex wireless challenges to help organizations stay connected, transform, and grow.

PCTEL, Inc.

T: +1 630 372 6800 | pctel.com

Specifications subject to change without notice. PCTEL® is a registered trademark of PCTEL, Inc. ©2023 PCTEL, Inc. All rights reserved. (June 2023)