+5V/-300V PIN Diode Switch Driver

DATASHEET

MDU050N401D12A

GENERAL DESCRIPTION

The MDU050N401D12A is a driver featuring high speed and wide negative and positive voltage range suited for driving high power PIN diode switch.

The driver is compatible with 3.3/5.0 V CMOS logic has two channels each with complementary outputs to supply each bias line with up to +500 mA current to forward bias the shunt diode and –20 mA and -5 to -300V to bias the series diode.

External current limiting resistors are required to set current.

FEATURES

- high speed <2 uS
- Compatible with CMOS FPGA outputs

FUNCTION BLOCK DIAGRAM

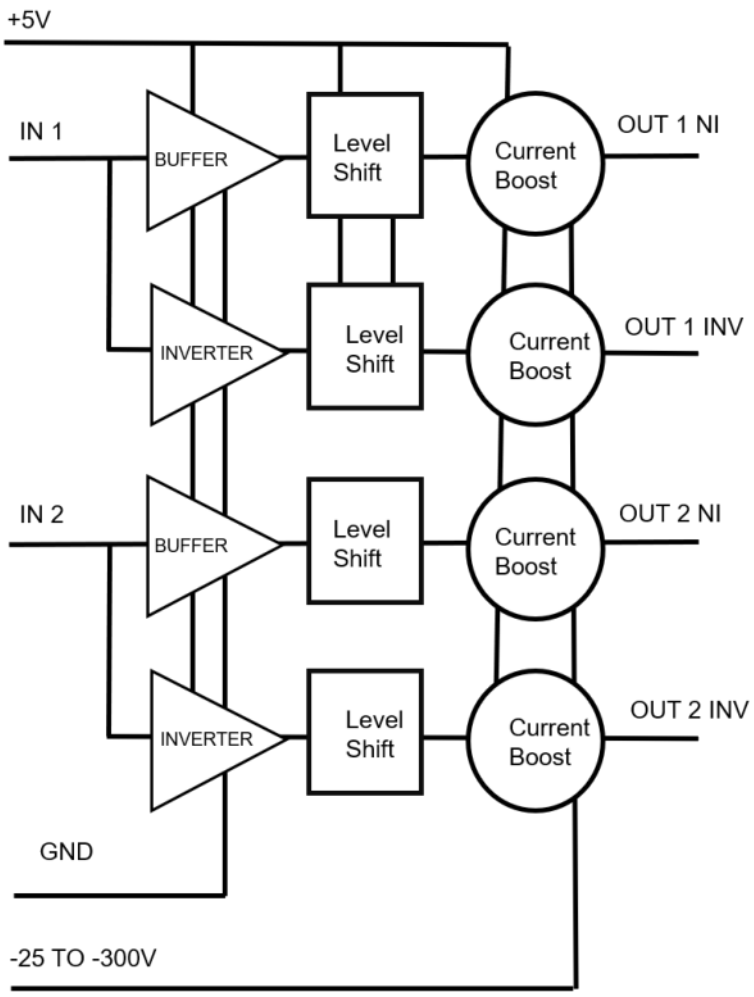

MECHANICAL

The MDU050N401D12A consists of monolithic silicon BJT IC wire-bonded to a laminate substrate and sealed with a dam and fill process. This forms a 1.0 X 1.0 in DFN 18 Pos SMT assembly designed for integration into an integrated microwave assembly.

ECCN Code EAR99

MDU050N401D12A is RoHS 3 (EU 2015/863) compliant.

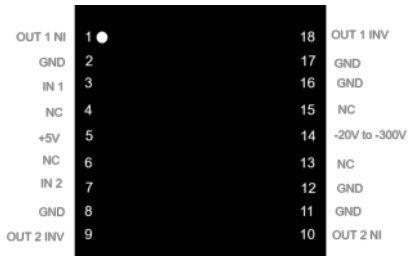

PIN CONNECTIONS

1	Output 1 Noninverting
2	Ground
3	Input 1
4	NC
5	+5V
6	NC
7	Input 2
8	Ground
9	Output 2 Inverting
10	Output 2 Noninverting
11	Ground
12	Ground
13	NC
14	-20V to -300V
15	NC
16	Ground
17	Ground
18	Output 1 Inverting

TRUTH TABLE

INPUT 1	INPUT 2	OUT 1 NI	OUT 2 INV	OUT2 NI	OUT1 INV
1	1	+V	-V	+V	-V
0	0	-V	+V	-V	+V

ELECTRICAL SPECIFICATIONS

Vpos1 +5V, Vneg -300V, TEMP 25C, PRR 1KHz

	SYMBOL	PARAMETER	CONDITIONS	MIN	TYP	MAX	UNITS
INPUT							
	VI_hi	Voltage Input High	CMOS	2.8	4	5.5	V
	VI_low	Voltage Input Low	CMOS	0	.8	1.2	V
OUTPUT							
	VO_hi	Voltage Out High	open load	4.5	4.8	5	V
	VO_low	Voltage Out Low	open load	-298.8	-299	-300	V
	IO_hi	Current Out High	steady state into 1V diode load		500		mA
	IO_low	Current Out Low	steady state into 1V diode load common arm resistor		-20		mA
	Iopk	Current Peak Output	sink		-80		mA
SUPPLY							
	IQC_pos	Quiescent Current Positive	0.1KHz 50% duty cycle		1		mA
	IQC_neg	Quiescent Current Negative	0.1KHz 50% duty cycle		1		mA
DYNAMIC							
	Trise	Time Rise	1 shunt 40micron PIN diode 100pF bypass capacitor		200		nS
	Tfall	Time Fall	1 shunt 40micron PIN diode 100pF bypass capacitor		400		nS
	Td_rise	Delay Rise	100 pF bypass & cathode grounded diode load		800		nS
	Td_fall	Delay Fall	100 pF bypass & cathode grounded diode load		900		nS
	TSW_rise	Switching Speed Rise	10pF load		200		nS
	TSW_fall	Switching Speed Fall	10pF load		200		nS
	PRR	Pulse Repetition Rate	Max, 10pF load		1	2	KHz

ESD Sensitivity HBM Class 1B

MECHANICAL SPECIFICATIONS

DRAWING NOT TO SCALE. DIMENSIONS ARE IN INCHES, UNLESS OTHERWISE NOTED.

MSL RATING 4 (refer to JEDEC STD 033B)
Shipping Packaging
Waffle Packs/trays

MARKING SPECIFICATIONS

Logo: Impellimax
Dot Only MarkingDate Code: YYWW

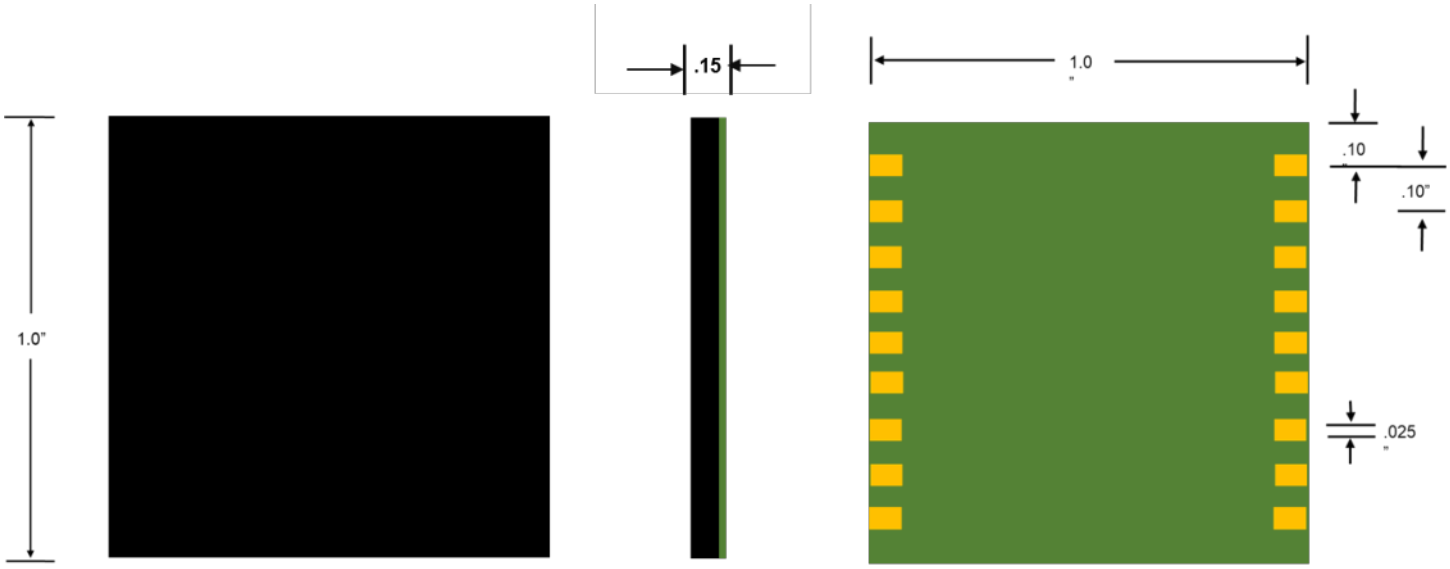

FOOTPRINT

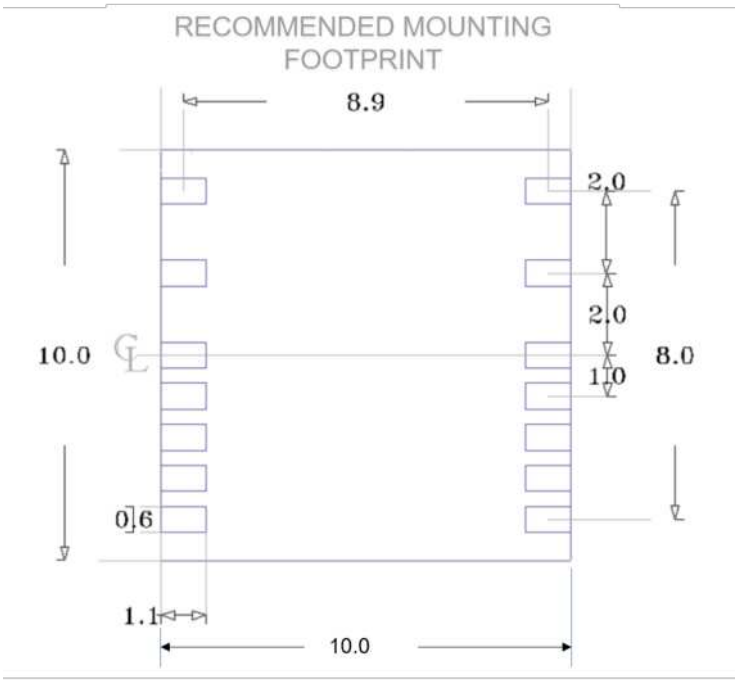

DIMENSIONS: Millimeters (mm)

SOLDER PROFILE

