NI-9351 Specifications

2022-10-07

Contents

NI-9351 Datasheet. 3

NI-9351 Datasheet



- Certified SIL3 capable
- DI/DO safety response time <250 µs
- AI safety response time <2.1 ms
- Contains user-programmable and automatic self-diagnostics
- 60 V DC, CAT I, channel-to-earth isolation
- Spring terminal connectivity
- Only compatible with CompactRIO Scan Mode on CompactRIO Controllers and CompactRIO ENET Chassis

The NI-9351 is a C Series Functional Safety module for any NI CompactRIO controller system. The NI-9351 employs self-contained logic operations supporting boolean logic with state machines. This module drives a 24 V digital signal to control safety devices such as contactors, gate switches, and control valves.

> **Caution** This icon denotes a caution advising you to take precautions to avoid injury.

> **Note** The Functional Safety Editor only runs on 64-bit Windows 7, Windows 8.1, or later. The application is not compatible with 32-bit Windows versions.

C Series Functional Safety Module Kit Contents

- NI-9351
- NI-9351 Getting Started Guide
- Strain Relief and Protection with Connector for 26-Position Connector Blocks, (Connector Backshell) NI part number 785525-01

Recommended Accessories

- 3 kΩ external pull-down resistors
- NI PS-14 power supply

C Series Functional Safety Overview



C Series Functional Safety modules can connect to sensors or final elements and allow for fast safety response that meets the demands of the process industry and production engineering.

- SIL3 capability and measurement class I/O in a single module
- Combine safety automation with monitoring and control applications using the same platform
- -40 °C to 70 °C temperature range to meet a variety of application and environmental needs

CompactRIO



CompactRIO combines an open-embedded architecture with small size, extreme ruggedness, and C Series modules in a platform powered by the NI LabVIEW reconfigurable I/O (RIO) architecture. Each system contains an FPGA for custom timing, triggering, and processing with a wide array of available modular I/O to meet any embedded application requirement.

Functional Safety Software

Functional Safety Editor

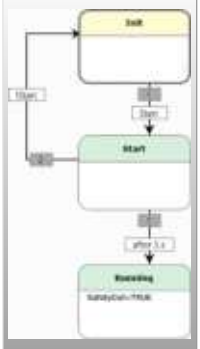

- Design state machines to monitor and control safety systems
- Configure Fail-safe diagnostics
- Define output behavior by state
- Connect states with Boolean text-based transitions and wait timers
- Create and compile User Programs that download to C Series Functional Safety modules

LabVIEW Professional Development System for Windows



- Create projects to monitor C Series Functional Safety modules
- Download User Programs to C Series Functional Safety modules
- Read faults and module operating modes

NI LabVIEW Real-Time Module



- Develop VIs to monitor safety modules
- Read Boolean diagnostics and operating modes
- Read inputs and variables from the C Series Functional Safety module
- Configure non-safety digital output

NI-9351 Input/Output Circuitry

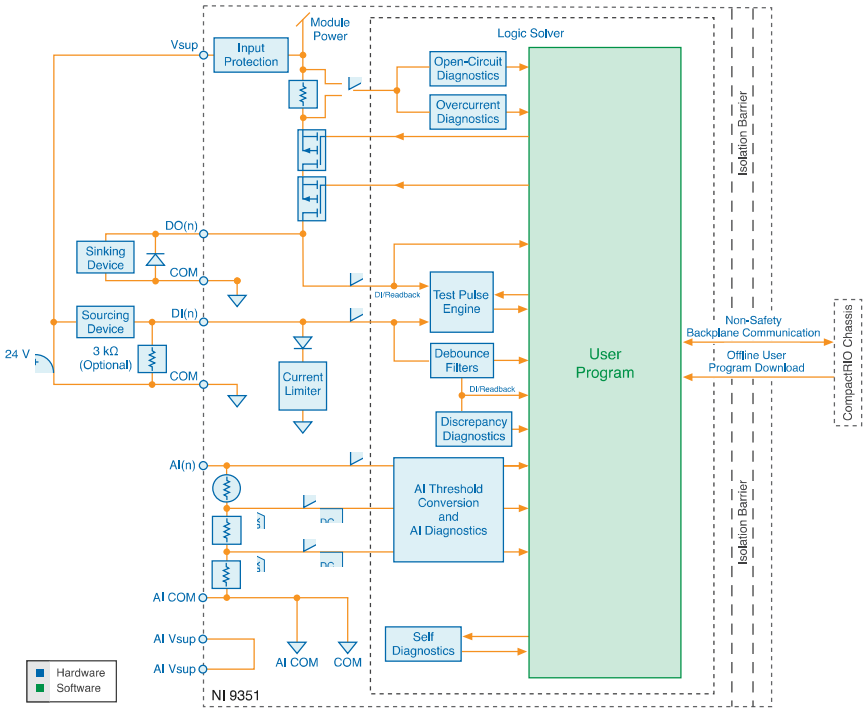

The analog input signals are scanned, amplified, conditioned, and then sampled by two independent ADCs. The module provides overvoltage protection for each channel. Only one channel can be in an overvoltage condition at a time.

© 2022 National Instruments Corporation.