OMAP5910 Dual-Core Processor

Data Manual

Literature Number: SPRS197D
August 2002 – Revised August 2004

PRODUCTION DATA information is current as of publication date. Products conform to specifications per the terms of Texas Instruments standard warranty. Production processing does not necessarily include testing of all parameters.

IMPORTANT NOTICE

Texas Instruments Incorporated and its subsidiaries (TI) reserve the right to make corrections, modifications, enhancements, improvements, and other changes to its products and services at any time and to discontinue any product or service without notice. Customers should obtain the latest relevant information before placing orders and should verify that such information is current and complete. All products are sold subject to TI's terms and conditions of sale supplied at the time of order acknowledgment.

TI warrants performance of its hardware products to the specifications applicable at the time of sale in accordance with TI's standard warranty. Testing and other quality control techniques are used to the extent TI deems necessary to support this warranty. Except where mandated by government requirements, testing of all parameters of each product is not necessarily performed.

TI assumes no liability for applications assistance or customer product design. Customers are responsible for their products and applications using TI components. To minimize the risks associated with customer products and applications, customers should provide adequate design and operating safeguards.

TI does not warrant or represent that any license, either express or implied, is granted under any TI patent right, copyright, mask work right, or other TI intellectual property right relating to any combination, machine, or process in which TI products or services are used. Information published by TI regarding third-party products or services does not constitute a license from TI to use such products or services or a warranty or endorsement thereof. Use of such information may require a license from a third party under the patents or other intellectual property of the third party, or a license from TI under the patents or other intellectual property of TI.

Reproduction of information in TI data books or data sheets is permissible only if reproduction is without alteration and is accompanied by all associated warranties, conditions, limitations, and notices. Reproduction of this information with alteration is an unfair and deceptive business practice. TI is not responsible or liable for such altered documentation.

Resale of TI products or services with statements different from or beyond the parameters stated by TI for that product or service voids all express and any implied warranties for the associated TI product or service and is an unfair and deceptive business practice. TI is not responsible or liable for any such statements.

Following are URLs where you can obtain information on other Texas Instruments products and application solutions:

Products		**Applications**	
Amplifiers	amplifier.ti.com	Audio	www.ti.com/audio
Data Converters	dataconverter.ti.com	Automotive	www.ti.com/automotive
DSP	dsp.ti.com	Broadband	www.ti.com/broadband
Interface	interface.ti.com	Digital Control	www.ti.com/digitalcontrol
Logic	logic.ti.com	Military	www.ti.com/military
Power Mgmt	power.ti.com	Optical Networking	www.ti.com/opticalnetwork
Microcontrollers	microcontroller.ti.com	Security	www.ti.com/security
		Telephony	www.ti.com/telephony
		Video & Imaging	www.ti.com/video
		Wireless	www.ti.com/wireless

Mailing Address: Texas Instruments
Post Office Box 655303 Dallas, Texas 75265

Copyright © 2004, Texas Instruments Incorporated

REVISION HISTORY

This data sheet revision history highlights the technical changes made to the SPRS197C device-specific data sheet to make it an SPRS197D revision.

Scope: This document has been reviewed for technical accuracy; the technical content is up-to-date as of the specified release date and includes the following changes.

PAGE(S) NO.	ADDITIONS/CHANGES/DELETIONS
All	Removed all references to MMC/SD SPI mode that is no longer supported.
18 – 21	In Table 2–1: Added footnote for GZG pin V12; “See Section 5.6.1 and Section 5.6.2 for special V_{SS} considerations with oscillator circuits.” Changed GZG pin P9 from “USB0.DP” to “USB.DP”
22 – 24	In Table 2–2: Added footnote for GDY pin F6; “See Section 5.6.1 and Section 5.6.2 for special V_{SS} considerations with oscillator circuits.” Changed GDY pin P5 from “USB0.DP” to “USB.DP”
34 – 46	In Table 2–4: Added A11, A13, H9, and G9 to list o f V_{SS} Pins Changed U21 to N16 in the GDY column Changed USB1.TXEN pin in the GDY column from T6 to P14 Changed LCD.PCLK and LCD.P[15:0] description from “LCD panels” to “LCD panel” Changed SDRAM.CLK description to include “SDRAM.CLK can also be configured as an input to monitor skew control.” Changed STAT_VAL/$\overline{\text{WKUP}}$ description to remove “STAT_VAL/$\overline{\text{WKUP}}$ may be configured via software to function as an external wake-up signal to the OMAP5910 device to request chip wake-up during sleep modes.”
48	Changed last bullet in Section 3.1 from: LCD controller supporting monochrome panels or STN and TFT color panels to: LCD controller supporting monochrome panels (STN) and color panels (STN or TFT)
54	In Section 3.3.4, changed the last sentence in the first paragraph from: Accessing registers with the incorrect access width may result in unexpected results including a TI Peripheral Bus (TIPB) bus error and associated TIPB interrupt. to: Accessing registers with the incorrect access width may cause unexpected results including a TI Peripheral Bus (TIPB) bus error and associated TIPB interrupt.
64	Combined bullets: • Selectable UART/autobauding modes (autobauding on UART1 and UART2) • Auto bauding between 1200bits/s and 115.2K bits/s To read as follows: • Selectable UART/autobauding modes (autobauding on UART1 and UART2) with autobauding between 1200 bits/s and 115.2K bits/s
66	Revised Section 3.11 to removed bulleted list and replace with the following: “The EMIFF Interface provides access to 16-bit-wide access to standard SDRAM memories and the IMIF provides access to the 192K bytes of on-chip SRAM.”

PAGE(S) NO.	ADDITIONS/CHANGES/DELETIONS
68	In Section 3.13, removed the following bulleted items: • Quantization /Dequantization (useful for JPEG, MPEG, H.26x Encoding/Decoding) • Flexible 1D/2D Wavelet Processing (useful for JPEG2000, MPEG4, and other compression standards) • Boundary and Perimeter Computation (useful for Machine Vision applications) • Image Threshold and Histogram Computations (useful for various Image Analysis applications)
72	Revised Table 3–17 to change access width from 32 bit to 16 bit. Changed MPU_READ_TIM_WD address to FFFE:C804 and changed MPU_TIMER_MODE_WD address to FFFE:C808.
120	Revised Section 4.1 and added Figure 4–1, OMAP Device Nomenclature
126	Changed Section 5.6.2, first paragraph, third line from “If the internal oscillator is not used (configured in software), an external clock source must be applied to the OSC1_IN pin and the OSC1_OUT pin must be left unconnected.” to “If the internal oscillator is not used (configured in software using FUNC_MUX_CTRL_B register), an external clock source must be applied to the OSC1_IN pin and the OSC1_OUT pin must be left unconnected.”
130	Revised Table 5–10
131	Revised Table 5–11
141 – 142	Changed footnote of Table 5–14 from: “P = 1/(Base frequency) for McBSP1 and 3, or 1/(AMPER_CK clock frequency) in nanoseconds (ns) for McBSP 2.Base frequency is 12 or 13MHz”. to: “Regardless of whether MCBSP.CLKS is internally or externally clocked, P = 1/(DSPXOR_CK) for McBSP1 and McBSP3, and P = 1/(AMPER_CK) for McBSP2. See the *OMAP5910 Dual–Core Processor Clock Generation and System Reset Management Reference Guide* (literature number SPRU678) for additional details.”

Contents

Section *Page*

1 OMAP5910 Features 15

2 Introduction 16
2.1 Description 16
2.1.1 TMS320C55x DSP Core 16
2.1.2 TI-Enhanced TI925T RISC Processor 17
2.2 Terminal Assignments 18
2.3 Terminal Characteristics and Multiplexing 24
2.4 Signal Description 34

3 Functional Overview 47
3.1 Functional Block Diagram Features 48
3.2 MPU Memory Maps 50
3.2.1 MPU Global Memory Map 50
3.2.2 MPU Subsystem Registers Memory Map 51
3.3 DSP Memory Maps 52
3.3.1 DSP Global Memory Map 52
3.3.2 On-Chip Dual-Access RAM (DARAM) 53
3.3.3 On-Chip Single-Access RAM (SARAM) 53
3.3.4 DSP I/O Space Memory Map 54
3.4 DSP External Memory (Managed by MMU) 55
3.5 MPU and DSP Private Peripherals 57
3.5.1 Timers 57
3.5.2 32k Timer (MPU only) 57
3.5.3 Watchdog Timer 57
3.5.4 Interrupt Handlers 57
3.5.5 LCD Controller 57
3.6 MPU Public Peripherals 58
3.6.1 USB Host Controller 58
3.6.2 USB Function Peripheral 59
3.6.3 Multichannel Buffered Serial Port (McBSP) 59
3.6.4 I^2C Master/Slave Interface 60
3.6.5 MICROWIRE Serial Interface 60
3.6.6 Multimedia Card/Secure Digital (MMC/SD) Interface 60
3.6.7 HDQ/1-Wire Interface 61
3.6.8 Camera Interface 61
3.6.9 MPUIO/Keyboard Interface 61
3.6.10 Pulse-Width Light (PWL) 61
3.6.11 Pulse-Width Tone (PWT) 61
3.6.12 LED Pulse Generator 62
3.6.13 Real-Time Clock 62
3.6.14 Frame Adjustment Counter 62
3.7 DSP Public Peripherals 62
3.7.1 Multichannel Buffered Serial Port (McBSP) 62
3.7.2 Multichannel Serial Interface (MCSI) 63

Section		Page
3.8	Shared Peripherals	63
3.8.1	Universal Asynchronous Receiver/Transmitter (UART)	63
3.8.2	General-Purpose I/O (GPIO)	64
3.8.3	Mailbox Registers	64
3.9	System DMA Controller	65
3.10	DSP DMA Controller	66
3.11	Traffic Controller (Memory Interfaces)	66
3.12	Interprocessor Communication	67
3.12.1	MPU/DSP Mailbox Registers	67
3.12.2	MPU Interface (MPUI)	67
3.12.3	MPU/DSP Shared Memory	68
3.13	DSP Hardware Accelerators	68
3.13.1	DCT/iDCT Accelerator	68
3.13.2	Motion Estimation Accelerator	68
3.13.3	Pixel Interpolation Accelerator	68
3.14	Power Supply Connection Examples	68
3.14.1	Core and I/O Voltage Supply Connections	68
3.14.2	Core Voltage Noise Isolation	70
3.15	MPU Register Descriptions	71
3.15.1	MPU Private Peripheral Registers	72
3.15.2	MPU Public Peripheral Registers	79
3.15.3	MPU Configuration Registers	88
3.16	DSP Register Descriptions	95
3.16.1	DSP Private Peripheral Registers	95
3.16.2	DSP Public Peripheral Registers	101
3.16.3	DSP Configuration Registers	106
3.16.4	MPU/DSP Shared Peripheral Register Descriptions	108
3.17	Interrupts	113
3.18	MPU System DMA Request Mapping	117
3.19	DSP DMA Event Mapping	118
4	**Documentation Support**	**119**
4.1	Device and Development Tool Support Nomenclature	120
5	**Electrical Specifications**	**121**
5.1	Absolute Maximum Ratings	121
5.2	Recommended Operating Conditions	122
5.3	Electrical Characteristics Over Recommended Operating Case Temperature Range (Unless Otherwise Noted)	123
5.4	Package Thermal Resistance Characteristics	124
5.5	Timing Parameter Symbology	124
5.6	Clock Specifications	125
5.6.1	32-kHz Oscillator and Input Clock	125
5.6.2	Base Oscillator (12 MHz or 13 MHz) and Input Clock	126
5.6.3	Internal Clock Speed Limitations	127
5.7	Reset Timings	128
5.7.1	OMAP5910 Device Reset	128
5.7.2	OMAP5910 MPU Core Reset	129

Section Page

5.8 External Memory Interface Timing 130
5.8.1 EMIFS/Flash Interface Timing 130
5.8.2 EMIFF/SDRAM Interface Timing 137
5.9 Multichannel Buffered Serial Port (McBSP) Timings 141
5.9.1 McBSP Transmit and Receive Timings 141
5.9.2 McBSP as SPI Master or Slave Timing 145
5.10 Multichannel Serial Interface (MCSI) 149
5.11 Camera Interface Timings 151
5.12 LCD Controller Timings 152
5.13 Multimedia Card/Secure Digital (MMC/SD) Timings 154
5.14 I^2C Timings 156
5.15 Universal Serial Bus (USB) Timings 157
5.16 MICROWIRE Interface Timings 158
5.17 HDQ/1-Wire Interface Timings 159

6 Glossary 161

7 Mechanical Data 164

List of Figures

Figure		Page
2–1	OMAP5910 GZG MicroStar BGA Package (Bottom View)	18
2–2	OMAP5910 GDY Package (Bottom View)	21
3–1	OMAP5910 Functional Block Diagram	47
3–2	DSP MMU Off	55
3–3	DSP MMU On	56
3–4	Supply Connections for a Typical System	69
3–5	Supply Connections for a System With 1.8-V SDRAM	70
3–6	External RC Circuit for DPLL CVDD Noise Isolation	71
5–1	Tester Pin Electronics	124
5–2	32-kHz Oscillator External Crystal	125
5–3	32-kHz Input Clock	126
5–4	Internal System Oscillator External Crystal	126
5–5	Device Reset Timings	128
5–6	MPU Core Reset Timings	129
5–7	Asynchronous Memory Read Timing	132
5–8	Asynchronous 32-Bit Read	133
5–9	Asynchronous Read – Page Mode ROM	134
5–10	Asynchronous Memory Write Timing	135
5–11	Synchronous Burst Read	136
5–12	32-Bit (2 x 16-Bit) SDRAM RD (Read) Command (Active Row)	138
5–13	32-Bit (2 x 16-Bit) SDRAM WRT (Write) Command (Active Row)	138
5–14	SDRAM ACTV (Activate Row) Command	139
5–15	SDRAM DCAB (Precharge/Deactivate Row) Command	139
5–16	SDRAM REFR (Refresh) Command	140
5–17	SDRAM MRS (Mode Register Set) Command	140
5–18	McBSP Receive Timings	144
5–19	McBSP Transmit Timings	144
5–20	McBSP Timing as SPI Master or Slave: CLKSTP = 10b, CLKXP = 0	145
5–21	McBSP Timing as SPI Master or Slave: CLKSTP = 11b, CLKXP = 0	146
5–22	McBSP Timing as SPI Master or Slave: CLKSTP = 10b, CLKXP = 1	147
5–23	McBSP Timing as SPI Master or Slave: CLKSTP = 11b, CLKXP = 1	148
5–24	MCSI Master Mode Timings	150
5–25	MCSI Slave Mode Timings	150
5–26	Camera Interface Timings	151
5–27	TFT Mode (LCD.HS/LCD.VS on Falling and LCD.Px on Rising LCD.PCLK)	152
5–28	TFT Mode (LCD.HS/LCD.VS on Rising and LCD.Px on Falling LCD.PCLK)	153
5–29	MMC/SD Host Command Timings	154

5–30 MMC/SD Card Response Timings 154
5–31 MMC/SD Host Write Timings 155
5–32 MMC/SD Host Read and Card CRC Status Timings 155
5–33 I^2C Timings 156
5–34 USB Integrated Transceiver Interface Timings 157
5–35 MICROWIRE Timings 158
5–36 OMAP5910 HDQ Interface Reading From HDQ Slave Device 160
5–37 OMAP5910 HDQ Interface Writing to HDQ Slave Device 160
5–38 Typical Communication Between OMAP5910 HDQ and HDQ Slave 160
5–39 HDQ/1-Wire Break (Reset) Timing 160

List of Tables

Table		Page
2–1	GZG BGA Terminal Assignments	18
2–2	GDY BGA Terminal Assignments	22
2–3	Terminal Characteristics and Multiplexing	25
2–4	Signal Description	34
3–1	OMAP5910 MPU Global Memory Map	50
3–2	MPU Private Peripheral Registers	51
3–3	MPU Public Peripheral Registers	51
3–4	MPU/DSP Shared Peripheral Registers	51
3–5	DSP Public Peripheral Registers (Accessible via MPUI Port)	52
3–6	MPU Configuration Registers	52
3–7	DSP Global Memory Map	52
3–8	DARAM Blocks	53
3–9	SARAM Blocks	53
3–10	DSP Private Peripheral Registers	54
3–11	DSP Public Peripheral Registers	54
3–12	DSP/MPU Shared Peripheral Registers	54
3–13	DSP Configuration Registers	54
3–14	MPU Timer 1 Registers	72
3–15	MPU Timer 2 Registers	72
3–16	MPU Timer 3 Registers	72
3–17	MPU Watchdog Timer Registers	72
3–18	MPU Level 1 Interrupt Handler Registers	73
3–19	MPU Level 2 Interrupt Handler Registers	74
3–20	System DMA Controller Registers	75
3–21	LCD Controller Registers	78
3–22	McBSP2 Registers	80
3–23	MICROWIRE Registers	80
3–24	I^2C Registers	81
3–25	HDQ/1-Wire Interface Registers	81
3–26	MMC/SD Registers	82
3–27	USB Function Registers	83
3–28	USB Host Controller Registers	85
3–29	Camera Interface Registers	85
3–30	MPU I/O/Keyboard Registers	86
3–31	PWL Registers	86
3–32	PWT Registers	86
3–33	LED Pulse Generator 1 Registers	86
3–34	LED Pulse Generator 2 Registers	86
3–35	32k Timer Registers	86
3–36	Real-Time Clock Registers	87
3–37	Frame Adjustment Counter Registers	87
3–38	OMAP 5910 Pin Configuration Registers	89
3–39	Local Bus Control Registers	89
3–40	Local Bus MMU Registers	90
3–41	DSP MMU Registers	91

Table		Page
3–42	MPUI Registers	91
3–43	TIPB (Private) Bridge 1 Configuration Registers	91
3–44	TIPB (Public) Bridge 2 Configuration Registers	92
3–45	MPU UART TIPB Bus Switch Registers	92
3–46	Traffic Controller Registers	93
3–47	MPU Clock/Reset/Power Mode Control Registers	93
3–48	DPLL1 Register	93
3–49	Ultra Low-Power Device Module Registers	94
3–50	Device Die Identification Registers	94
3–51	JTAG Identification Code Register	94
3–52	DSP DMA Controller Registers	96
3–53	DSP Timer 1 Registers	99
3–54	DSP Timer 2 Registers	99
3–55	DSP Timer 3 Registers	99
3–56	DSP Watchdog Timer Registers	99
3–57	DSP Interrupt Interface Registers	99
3–58	DSP Level 2 Interrupt Handler Registers	100
3–59	McBSP1 Registers	101
3–60	McBSP3 Registers	102
3–61	MCSI1 Registers	104
3–62	MCSI2 Registers	105
3–63	DSP Instruction Cache Registers	106
3–64	DSP EMIF Configuration Register	106
3–65	DSP TIPB Bridge Configuration Registers	106
3–66	DSP UART TIPB Bus Switch Registers	107
3–67	DSP Clock Mode Registers	107
3–68	UART1 Registers	109
3–69	UART2 Registers	110
3–70	UART3/IrDA Registers	111
3–71	MPU/DSP Shared GPIO Registers	112
3–72	MPU/DSP Shared Mailbox Registers	112
3–73	MPU Level 1 and Level 2 Interrupt Mappings	113
3–74	DSP Level 1 Interrupt Mappings	115
3–75	DSP Level 2 Interrupt Mappings	116
3–76	DMA Request Mapping	117
3–77	DSP DMA Mapping	118
5–1	Thermal Resistance Characteristics	124
5–2	32-kHz Oscillator Switching Characteristics	125
5–3	32-kHz Input Clock Timing Requirements	126
5–4	Base Oscillator Switching Characteristics	127
5–5	Internal Clock Speed Limitations	127
5–6	OMAP5910 Device Reset Timing Requirements	128
5–7	OMAP5910 Device Reset Switching Characteristics	128
5–8	MPU_RST Timing Requirements	129
5–9	MPU_RST Switching Characteristics	129

Table		Page
5–10	EMIFS/Flash Interface Timing Requirements	130
5–11	EMIFS/Flash Interface Switching Characteristics	131
5–12	EMIFF/SDRAM Interface Timing Requirements	137
5–13	EMIFF/SDRAM Interface Switching Characteristics	137
5–14	McBSP Timing Requirements	141
5–15	McBSP Switching Characteristics	143
5–16	McBSP as SPI Master or Slave Timing Requirements (CLKSTP = 10b, CLKXP = 0)	145
5–17	McBSP as SPI Master or Slave Switching Characteristics (CLKSTP = 10b, CLKXP = 0)	145
5–18	McBSP as SPI Master or Slave Timing Requirements (CLKSTP = 11b, CLKXP = 0)	146
5–19	McBSP as SPI Master or Slave Switching Characteristics (CLKSTP = 11b, CLKXP = 0)	146
5–20	McBSP as SPI Master or Slave Timing Requirements (CLKSTP = 10b, CLKXP = 1)	147
5–21	McBSP as SPI Master or Slave Switching Characteristics (CLKSTP = 10b, CLKXP = 1)	147
5–22	McBSP as SPI Master or Slave Timing Requirements (CLKSTP = 11b, CLKXP = 1)	148
5–23	McBSP as SPI Master or Slave Switching Characteristics (CLKSTP = 11b, CLKXP = 1)	148
5–24	MCSI Timing Requirements	149
5–25	MCSI Switching Characteristics	149
5–26	Camera Interface Timing Requirements	151
5–27	LCD Controller Switching Characteristics	152
5–28	MMC/SD Timing Requirements	154
5–29	MMC/SD Switching Characteristics	154
5–30	I^2C Signals (I2C.SDA and I2C.SCL) Switching Characteristics	156
5–31	USB Integrated Transceiver Interface Switching Characteristics	157
5–32	MICROWIRE Timing Requirements	158
5–33	MICROWIRE Switching Characteristics	158
5–34	HDQ/1-Wire Timing Requirements	159
5–35	HDQ/1-Wire Switching Characteristics	159

1 OMAP5910 Features

- **Low-Power, High-Performance CMOS Technology**
  - **0.13-μm Technology**
  - **1.6-V Core Voltage**
- **TI925T (MPU) ARM9TDMI™ Core**
  - **Support 32-Bit and 16-Bit (Thumb® Mode) Instruction Sets**
  - **16K-Byte Instruction Cache**
  - **8K-Byte Data Cache**
  - **Data and Program Memory Management Units (MMUs)**
  - **Two 64-Entry Translation Look-Aside Buffers (TLBs) for MMUs**
  - **17-Word Write Buffer**
- **TMS320C55x™ (C55x™) DSP Core**
  - **One/Two Instructions Executed per Cycle**
  - **Dual Multipliers (Two Multiply-Accumulates per Cycle)**
  - **Two Arithmetic/Logic Units**
  - **One Internal Program Bus**
  - **Five Internal Data/Operand Buses (3 Read Buses and 2 Write Buses)**
  - **32K x 16-Bit On-Chip Dual-Access RAM (DARAM) (64K Bytes)**
  - **48K x 16-Bit On-Chip Single-Access RAM (SARAM) (96K Bytes)**
  - **16K x 16-Bit On-Chip ROM (32K Bytes)**
  - **Instruction Cache (24K Bytes)**
  - **Video Hardware Accelerators for DCT, iDCT, Pixel Interpolation, and Motion Estimation for Video Compression**
- **192K Bytes of Shared Internal SRAM**
- **Memory Traffic Controller (TC)**
  - **16-Bit EMIFS External Memory Interface to Access up to 128M Bytes of Flash, ROM, or ASRAM**
  - **16-Bit EMIFF External Memory Interface to Access up to 64M Bytes of SDRAM**
- **9-Channel System DMA Controller**
- **DSP Memory Management Unit**
- **Endianism Conversion Logic**
- **Digital Phase-Locked Loop (DPLL) for MPU/DSP/TC Clocking Control**
- **DSP Peripherals**
  - **Three 32-Bit Timers and Watchdog Timer**
  - **Level1/Level2 Interrupt Handlers**
  - **Six-Channel DMA Controller**
  - **Two Multichannel Buffered Serial Ports (McBSP)**
  - **Two Multichannel Serial Interfaces (MCSI)**
- **TI925T Peripherals**
  - **Three 32-Bit Timers and Watchdog Timer**
  - **32-kHz Timer**
  - **Level1/Level2 Interrupt Handlers**
  - **USB (Full/Low Speed) Host Interface With up to 3 Ports**
  - **USB (Full Speed) Function Interface**
  - **One Integrated USB Transceiver for Either Host or Function**
  - **Multichannel Buffered Serial Port**
  - **Inter-Integrated Circuit (I^2C) Master and Slave Interface**
  - **MICROWIRE™ Serial Interface**
  - **Multimedia Card (MMC) and Secure Digital (SD) Interface**
  - **HDQ/1-Wire® Interface**
  - **Camera Interface for CMOS Sensors**
  - **ETM9 Trace Module for TI925T Debug**
  - **Keyboard Matrix Interface (6 x 5 or 8 x 8)**
  - **Up to Ten MPU General-Purpose I/Os**
  - **Pulse-Width Tone (PWT) Interface**
  - **Pulse-Width Light (PWL) Interface**
  - **Two LED Pulse Generators (LPGs)**
  - **Real-Time Clock (RTC)**
  - **LCD Controller With Dedicated System DMA Channel**
- **Shared Peripherals**
  - **Three Universal Asynchronous Receiver/Transmitters (UARTs) (One Supporting SIR Mode for IrDA)**
  - **Four Interprocessor Mailboxes**
  - **Up to 14 Shared General-Purpose I/Os**
- **Individual Power-Saving Modes for MPU/DSP/TC**
- **On-Chip Scan-Based Emulation Logic**
- **IEEE Std 1149.1† (JTAG) Boundary Scan Logic**
- **Two 289-Ball Ball Grid Array Package Options (GZG and GDY Suffixes)**

TMS320C55x and C55x are trademarks of Texas Instruments.
ARM9TDMI is a trademark of ARM Limited.
Thumb is a registered trademark of ARM Limited.
MICROWIRE is a trademark of National Semiconductor Corporation.
1-Wire is a registered trademark of Dallas Semiconductor Corporation.
† IEEE Standard 1149.1-1990 Standard Test-Access Port and Boundary Scan Architecture.

2 Introduction

This section describes the main features of the OMAP5910 device, lists the terminal assignments, and describes the function of each terminal. This data manual also provides a detailed description section, electrical specifications, parameter measurement information, and mechanical data about the available packaging.

2.1 Description

The OMAP5910 is a highly integrated hardware and software platform, designed to meet the application processing needs of next-generation embedded devices.

The OMAP™ platform enables OEMs and ODMs to quickly bring to market devices featuring rich user interfaces, high processing performance, and long battery life through the maximum flexibility of a fully integrated mixed processor solution.

The dual-core architecture provides benefits of both DSP and RISC technologies, incorporating a TMS320C55x DSP core and a high-performance TI925T ARM core.

The OMAP5910 device is designed to run leading open and embedded RISC-based operating systems, as well as the Texas Instruments (TI) DSP/BIOS™ software kernel foundation, and is available in a 289-ball MicroStar BGA™ package.

The OMAP5910 is targeted at the following applications:

- Applications processing devices
- Mobile communications
  - 802.11
  - Bluetooth™ wireless technology
  - GSM (including GPRS and EDGE)
  - CDMA
  - Proprietary government and other
- Video and image processing (MPEG4, JPEG, Windows® Media Video, etc.)
- Advanced speech applications (text-to-speech, speech recognition)
- Audio processing (MPEG-1 Audio Layer3 [MP3], AMR, WMA, AAC, and other GSM speech codecs)
- Graphics and video acceleration
- Generalized web access
- Data processing (fax, encryption/decryption, authentication, signature verification and watermarking)

2.1.1 TMS320C55x DSP Core

The DSP core of the OMAP5910 device is based on the TMS320C55x DSP generation CPU processor core. The C55x DSP architecture achieves high performance and low power through increased parallelism and total focus on reduction in power dissipation. The CPU supports an internal bus structure composed of one program bus, three data read buses, two data write buses, and additional buses dedicated to peripheral and DMA activity. These buses provide the ability to perform up to three data reads and two data writes in a single cycle. In parallel, the DMA controller can perform up to two data transfers per cycle independent of the CPU activity.

OMAP, DSP/BIOS, and MicroStar BGA are trademarks of Texas Instruments.
Bluetooth is a trademark owned by Bluetooth SIG, Inc.
Windows is a registered trademark of Microsoft Corporation.
Other trademarks are the property of their respective owners.

The C55x CPU provides two multiply-accumulate (MAC) units, each capable of 17-bit x 17-bit multiplication in a single cycle. A central 40-bit arithmetic/logic unit (ALU) is supported by an additional 16-bit ALU. Use of the ALUs is under instruction set control, providing the ability to optimize parallel activity and power consumption. These resources are managed in the address unit (AU) and data unit (DU) of the C55x CPU.

The C55x DSP generation supports a variable byte width instruction set for improved code density. The instruction unit (IU) performs 32-bit program fetches from internal or external memory and queues instructions for the program unit (PU). The program unit decodes the instructions, directs tasks to AU and DU resources, and manages the fully protected pipeline. Predictive branching capability avoids pipeline flushes on execution of conditional instructions. The OMAP5910 DSP core also includes a 24K-byte instruction cache to minimize external memory accesses, improving data throughput and conserving system power.

2.1.1.1 DSP Tools Support

The 55x DSP core is supported by the industry's leading eXpressDSP™ software environment including the Code Composer Studio™ integrated development environment, DSP/BIOS software kernel foundation, the TMS320™ DSP Algorithm Standard, and the industry's largest third-party network. Code Composer Studio features code generation tools including a C-Compiler, Visual Linker, simulator, Real-Time Data Exchange (RTDX™), XDS510™ emulation device drivers, and Chip Support Libraries (CSL). DSP/BIOS is a scalable real-time software foundation available for no cost to users of Texas Instruments' DSP products providing a preemptive task scheduler and real-time analysis capabilities with very low memory and megahertz overhead. The TMS320 DSP Algorithm Standard is a specification of coding conventions allowing fast integration of algorithms from different teams, sites, or third parties into the application framework. Texas Instruments' extensive DSP third-party network of over 400 providers brings focused competencies and complete solutions to customers.

2.1.1.2 DSP Software Support

Texas Instruments has also developed foundation software available for the 55x DSP core. The C55x DSP Library (DSPLIB) features over 50 C-callable software kernels (FIR/IIR filters, Fast Fourier Transforms (FFTs), and various computational functions). The DSP Image/Video Processing Library (IMGLIB) contains over 20 software kernels highly optimized for C55x DSPs and is compiled with the latest revision of the C55x DSP code generation tools. These imaging functions support a wide range of applications that include compression, video processing, machine vision, and medical imaging.

2.1.2 TI-Enhanced TI925T RISC Processor

The MPU core is a TI925T reduced instruction set computer (RISC) processor. The TI925T is a 32-bit processor core that performs 32-bit or 16-bit instructions and processes 32-bit, 16-bit, or 8-bit data. The core uses pipelining so that all parts of the processor and memory system can operate continuously.

The MPU core incorporates:

- A coprocessor 15 (CP15) and protection module
- Data and program Memory Management Units (MMUs) with table look-aside buffers.
- A separate 16K-byte instruction cache and 8K-byte data cache. Both are two-way associative with virtual index virtual tag (VIVT).
- A 17-word write buffer (WB)

The OMAP5910 device uses the TI925T core in little endian mode only.

To reduce effective memory access time, the TI925T has an instruction cache, a data cache, and a write buffer. In general, these are transparent to program execution.

eXpressDSP, Code Composer Studio, TMS320, RTDX, and XDS510 are trademarks of Texas Instruments.

2.2 Terminal Assignments

Figure 2–1 illustrates the ball locations for the 289-ball GZG ball grid array (BGA) package and is used in conjunction with Table 2–1 to locate signal names and ball grid numbers. GZG BGA ball numbers in Table 2–1 are read from left-to-right, top-to-bottom.

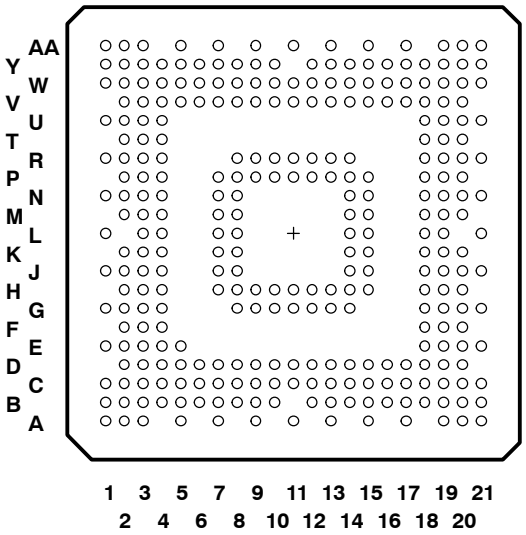

Figure 2–1. OMAP5910 GZG MicroStar BGA™ Package (Bottom View)

In Table 2–1, signals with multiplexed functions are separated with forward slashes as follows:

- **signal1/signal2/signal3** (for example, GPIO11/HDQ)

Signals which are associated with specific peripherals are denoted by using the peripheral name, followed by a period, and then the signal name; as follows:

- **peripheral1.signal1** (for example, MCBSP1.DR)

Table 2–1. GZG BGA Terminal Assignments

GZG BGA BALL #	SIGNAL	GZG BGA BALL #	SIGNAL	GZG BGA BALL #	SIGNAL	GZG BGA BALL #	SIGNAL
A1	DV_{DD4}	A2	$\overline{\text{SDRAM.RAS}}$	A3	CV_{DD1}	A5	DV_{DD4}
A7	DV_{DD4}	A9	CV_{DD}	A11	V_{SS}	A13	V_{SS}
A15	DV_{DD1}	A17	LCD.P[13]	A19	DV_{DD1}	A20	LCD.P[5]
A21	V_{SS}	B1	V_{SS}	B2	V_{SS}	B3	$\overline{\text{SDRAM.DQML}}$
B4	SDRAM.D[13]	B5	V_{SS}	B6	SDRAM.D[8]	B7	V_{SS}
B8	SDRAM.D[4]	B9	SDRAM.D[0]	B10	DV_{DD4}	B12	DV_{DD4}
B13	CV_{DD3}	B14	SDRAM.A[0]	B15	LCD.AC	B16	V_{SS}
B17	LCD.P[11]	B18	V_{SS}	B19	LCD.P[6]	B20	CV_{DD3}
B21	LCD.P[1]	C1	FLASH.A[3]	C2	DV_{DD5}	C3	$\overline{\text{SDRAM.WE}}$
C4	SDRAM.D[14]	C5	SDRAM.D[11]	C6	SDRAM.D[9]	C7	SDRAM.D[6]
C8	SDRAM.D[2]	C9	SDRAM.CLK	C10	SDRAM.BA[0]	C11	SDRAM.A[10]
C12	SDRAM.A[7]	C13	SDRAM.A[4]	C14	SDRAM.A[1]	C15	LCD.PCLK

† See Section 5.6.1 and Section 5.6.2 for special V_{SS} considerations with ocillator circuits.

MicroStar BGA is a trademark of Texas Instruments.

Table 2–1. GZG BGA Terminal Assignments (Continued)

GZG BGA BALL #	SIGNAL	GZG BGA BALL #	SIGNAL	GZG BGA BALL #	SIGNAL	GZG BGA BALL #	SIGNAL
C16	LCD.P[14]	C17	LCD.P[10]	C18	LCD.P[7]	C19	LCD.P[2]
C20	KB.C[5]	C21	KB.C[4]	D2	FLASH.A[5]	D3	FLASH.A[2]
D4	$\overline{\text{SDRAM.DQMU}}$	D5	SDRAM.D[15]	D6	SDRAM.D[12]	D7	SDRAM.D[7]
D8	SDRAM.D[5]	D9	SDRAM.CKE	D10	SDRAM.BA[1]	D11	SDRAM.A[9]
D12	SDRAM.A[6]	D13	SDRAM.A[3]	D14	LCD.VS	D15	LCD.P[15]
D16	LCD.P[9]	D17	LCD.P[8]	D18	LCD.P[0]	D19	KB.C[2]
D20	KB.C[1]	E1	DV_{DD5}	E2	V_{SS}	E3	FLASH.A[7]
E4	FLASH.A[4]	E5	RSVD	E18	KB.C[3]	E19	KB.R[4]
E20	KB.R[3]	E21	DV_{DD1}	F2	CV_{DD}	F3	FLASH.A[9]
F4	FLASH.A[6]	F18	KB.C[0]	F19	KB.R[1]	F20	V_{SS}
G1	V_{SS}	G2	FLASH.A[12]	G3	FLASH.A[11]	G4	FLASH.A[10]
G8	SDRAM.D[3]	G9	SDRAM.D[1]	G10	SDRAM.A[12]	G11	SDRAM.A[8]
G12	SDRAM.A[2]	G13	LCD.P[12]	G14	LCD.P[3]	G18	KB.R[0]
G19	$\overline{\text{PWRON_RESET}}$	G20	MCBSP1.CLKS	G21	MCBSP1.CLKX	H2	DV_{DD5}
H3	FLASH.A[15]	H4	FLASH.A[14]	H7	FLASH.RDY	H8	SDRAM.D[10]
H9	$\overline{\text{SDRAM.CAS}}$	H10	SDRAM.A[11]	H11	SDRAM.A[5]	H12	LCD.HS
H13	LCD.P[4]	H14	KB.R[2]	H15	MCBSP1.FSX/ MCBSP1.DX	H18	MCBSP1.DX/ MCBSP1.FSX
H19	CAM.EXCLK/ ETM.SYNC/ UWIRE.SDO	H20	MCBSP1.DR	J1	FLASH.A[20]	J2	FLASH.A[17]
J3	FLASH.A[19]	J4	FLASH.A[18]	J7	FLASH.A[8]	J8	FLASH.A[1]
J14	CAM.D[5]/ ETM.D[5]/ UWIRE.SDI	J15	CAM.LCLK/ ETM.CLK/ UWIRE.SCLK	J18	CAM.D[7]/ ETM.D[7]/ $\overline{\text{UWIRE.CS0}}$	J19	CAM.D[6]/ ETM.D[6]/ $\overline{\text{UWIRE.CS3}}$
J20	V_{SS}	J21	CV_{DD3}	K2	V_{SS}	K3	FLASH.A[23]
K4	FLASH.A[22]	K7	FLASH.A[16]	K8	FLASH.A[13]	K14	CAM.D[1]/ETM.D[1]/ UART3.RTS
K15	CAM.D[2]/ ETM.D[2]/ UART3.CTS	K18	CAM.D[4]/ ETM.D[4]/ UART3.TX	K19	CAM.D[3]/ ETM.D[3]/ UART3.RX	K20	V_{SS}
L1	DV_{DD5}	L3	$\overline{\text{FLASH.BE[0]}}$	L4	$\overline{\text{FLASH.ADV}}$	L7	FLASH.A[24]
L8	FLASH.A[21]	L14	UART3.RX/PWL/ UART2.RX	L15	CAM.HS/ ETM.PSTAT[1]/ UART2.CTS	L18	CAM.VS/ ETM.PSTAT[2]
L19	CAM.D[0]/ ETM.D[0]/ MPUIO12	L21	DV_{DD1}	M2	CV_{DD4}	M3	$\overline{\text{FLASH.CS1}}$
M4	$\overline{\text{FLASH.CS2}}$/ $\overline{\text{FLASH.BAA}}$	M7	$\overline{\text{FLASH.CS0}}$	M8	$\overline{\text{FLASH.BE[1]}}$	M14	GPIO2/ SPI.CLK
M15	GPIO7/ MMC.DAT2	M18	UART3.TX/ PWT/ UART2.TX	M19	CAM.RSTZ/ ETM.PSTAT[0]/ UART2.RTS	M20	GPIO15/ KB.R[7]
N1	V_{SS}	N2	FLASH.D[1]	N3	FLASH.CLK	N4	FLASH.D[0]
N7	FLASH.D[2]	N8	$\overline{\text{FLASH.CS3}}$	N14	$\overline{\text{UWIRE.CS0}}$/ MCBSP3.CLKX	N15	MPUIO2/ $\overline{\text{EXT_DMA_REQ0}}$
N18	GPIO12/ MCBSP3.FSX	N19	GPIO13/ KB.R[5]	N20	GPIO11/ HDQ	N21	GPIO14/ KB.R[6]
P2	FLASH.D[3]	P3	DV_{DD5}	P4	FLASH.D[4]	P7	FLASH.D[5]

† See Section 5.6.1 and Section 5.6.2 for special V_{SS} considerations with ocillator circuits.

Table 2–1. GZG BGA Terminal Assignments (Continued)

GZG BGA BALL #	SIGNAL	GZG BGA BALL #	SIGNAL	GZG BGA BALL #	SIGNAL	GZG BGA BALL #	SIGNAL
P8	FLASH.D[11]	P9	USB.DP	P10	MCBSP2.DR/ MCBSP2.DX	P11	MMC.CMD/SPI.DO
P12	CV_{DD}	P13	CLK32K_IN	P14	RST_HOST_OUT/ MCBSP3.DX/ USB1.SE0	P15	$\overline{\text{UWIRE.CS3}}$/ KB.C[6]
P18	GPIO3/ SPI.CS3/ MCBSP3.FSX/LED1	P19	GPIO6/ SPI.CS1/ MCBSP3.FSX	P20	GPIO4/ SPI.CS2/ MCBSP3.FSX	R1	DV_{DD5}
R2	FLASH.D[6]	R3	FLASH.D[7]	R4	FLASH.D[8]	R8	USB.DM
R9	UART2.RX/ USB2.VM	R10	MCLKREQ/EXT_ MASTER_REQ	R11	MMC.DAT0/SPI.DI	R12	OSC32K_OUT
R13	BCLKREQ/ UART3.CTS/ UART1.DSR	R14	UART1.CTS	R18	GPIO0/ SPI.RDY/ USB.VBUS	R19	GPIO1/ UART3.RTS
R20	CV_{DD3}	R21	V_{SS}	T2	FLASH.D[9]	T3	FLASH.D[10]
T4	FLASH.D[14]	T18	I2C.SCL	T19	MPUIO4/ $\overline{\text{EXT_DMA_REQ1}}$/ LED2	T20	MPUIO5/ LOW_PWR
U1	FLASH.D[12]	U2	V_{SS}	U3	FLASH.D[13]	U4	$\overline{\text{FLASH.OE}}$
U18	UWIRE.SDI/ UART3.DSR/ UART1.DSR/ MCBSP3.DR	U19	MPUIO1	U20	V_{SS}	U21	DV_{DD1}
V2	DV_{DD5}	V3	FLASH.D[15]	V4	$\overline{\text{FLASH.WP}}$	V5	V_{SS}
V6	UART2.TX/ USB2.TXD	V7	MCBSP2.CLKR/ GPIO11	V8	MPUIO3	V9	MCSI2.SYNC/ GPIO7
V10	MMC.DAT1/ MPUIO7	V11	MMC.CLK	V12†	V_{SS}	V13	MCSI1.SYNC/ USB1.VP
V14	UART1.RX	V15	$\overline{\text{MPU_RST}}$	V16	EMU0	V17	TMS
V18	CONF	V19	UWIRE.SCLK/ KB.C[7]	V20	I2C.SDA	W1	$\overline{\text{FLASH.RP}}$
W2	$\overline{\text{FLASH.WE}}$	W3	OSC1_OUT	W4	USB.PUEN/ USB.CLKO	W5	UART2.RTS/ USB2.SE0/ MPUIO5
W6	MCBSP2.FSR/ GPIO12	W7	MCBSP2.FSX	W8	GPIO9	W9	MCSI2.DOUT/ USB2.TXEN
W10	MMC.DAT2/ MPUIO11	W11	MMC.DAT3/ MPUIO6	W12	OSC32K_IN	W13	MCSI1.DIN/ USB1.RCV
W14	MCSI1.DOUT/ USB1.TXD	W15	$\overline{\text{RST_OUT}}$	W16	MCBSP3.CLKX/ USB1.TXEN	W17	EMU1
W18	TCK	W19	$\overline{\text{BFAIL}}$/ $\overline{\text{EXT_FIQ}}$	W20	V_{SS}	W21	UWIRE.SDO/ UART3.DTR/ UART1.DTR/ MCBSP3.DX
Y1	CV_{DD2}	Y2	OSC1_IN	Y3	V_{SS}	Y4	UART2.BCLK
Y5	UART2.CTS/ USB2.RCV/ GPIO7	Y6	MCBSP2.CLKX	Y7	DV_{DD3}	Y8	GPIO8
Y9	MCLK	Y10	MCSI2.CLK/ USB2.SUSP	Y12	CLK32K_OUT/ MPUIO0/ USB1.SPEED	Y13	BCLK/ UART3.RTS/ UART1.DTR
Y14	UART1.TX	Y15	V_{SS}	Y16	DV_{DD1}	Y17	STAT_VAL/ $\overline{\text{WKUP}}$

† See Section 5.6.1 and Section 5.6.2 for special V_{SS} considerations with ocillator circuits.

Table 2–1. GZG BGA Terminal Assignments (Continued)

GZG BGA BALL #	SIGNAL	GZG BGA BALL #	SIGNAL	GZG BGA BALL #	SIGNAL	GZG BGA BALL #	SIGNAL
Y18	$\overline{TRST}$	Y19	TDI	Y20	CV_{DD}	Y21	CV_{DDA}
AA1	V_{SS}	AA2	DV_{DD2}	AA3	CV_{DD2}	AA5	MCBSP2.DX/ MCBSP2.DR
AA7	V_{SS}	AA9	MCSI2.DIN/ USB2.VP	AA11	DV_{DD1}	AA13	MCSI1.CLK/ USB1.VM
AA15	UART1.RTS	AA17	MPU_BOOT/ MCBSP3.DR/ USB1.SUSP	AA19	TDO	AA20	CLK32K_CTRL
AA21	V_{SS}						

† See Section 5.6.1 and Section 5.6.2 for special V_{SS} considerations with ocillator circuits.

Figure 2–2 illustrates the ball locations for the 289-ball GDY ball grid array (BGA) package and is used in conjunction with Table 2–1 to locate signal names and ball grid numbers. GDY BGA ball numbers in Figure 2–2 are read from left-to-right, top-to-bottom.

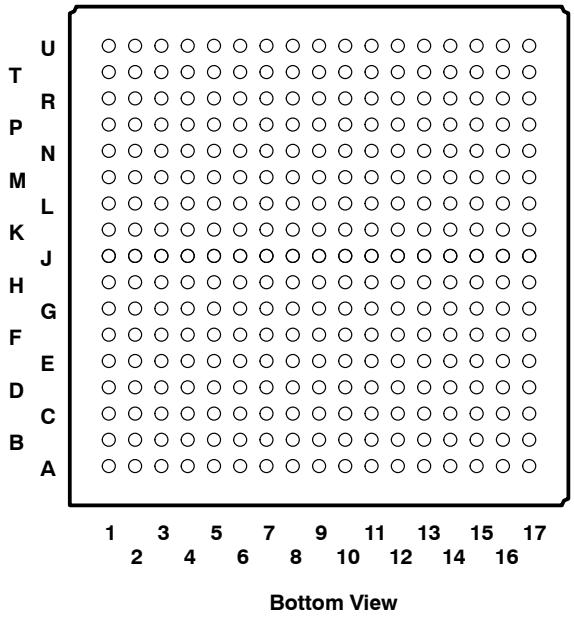

Figure 2–2. OMAP5910 GDY Package (Bottom View)

In Table 2–2, signals with multiplexed functions are separated with forward slashes as follows:

- **signal1/signal2/signal3** (for example, GPIO11/HDQ)

Signals which are associated with specific peripherals are denoted by using the peripheral name, followed by a period, and then the signal name; as follows:

- **peripheral1.signal1** (for example, MCBSP1.DR)

Table 2–2. GDY BGA Terminal Assignments

GDY BGA BALL #	SIGNAL	GDY BGA BALL #	SIGNAL	GDY BGA BALL #	SIGNAL	GDY BGA BALL #	SIGNAL
A1	$\overline{\text{SDRAM.WE}}$	A2	$\overline{\text{SDRAM.DQMU}}$	A3	SDRAM.D[9]	A4	SDRAM.D[6]
A5	DV_{DD4}	A6	SDRAM.D[0]	A7	SDRAM.CLK	A8	SDRAM.A[9]
A9	SDRAM.A[5]	A10	SDRAM.A[1]	A11	LCD.AC	A12	LCD.PCLK
A13	LCD.P[9]	A14	DV_{DD1}	A15	LCD.P[6]	A16	LCD.P[3]
A17	KB.C[5]	B1	FLASH.A[1]	B2	$\overline{\text{SDRAM.DQML}}$	B3	CV_{DD1}
B4	SDRAM.D[12]	B5	SDRAM.D[11]	B6	SDRAM.D[5]	B7	SDRAM.D[2]
B8	SDRAM.BA[0]	B9	SDRAM.A[11]	B10	SDRAM.A[2]	B11	SDRAM.A[0]
B12	LCD.P[13]	B13	LCD.P[11]	B14	LCD.P[7]	B15	LCD.P[4]
B16	LCD.P[0]	B17	KB.C[3]	C1	FLASH.A[3]	C2	FLASH.A[4]
C3	FLASH.RDY	C4	$\overline{\text{SDRAM.RAS}}$	C5	SDRAM.D[14]	C6	SDRAM.D[10]
C7	SDRAM.D[3]	C8	SDRAM.A[12]	C9	SDRAM.BA[1]	C10	SDRAM.A[8]
C11	SDRAM.A[3]	C12	DV_{DD1}	C13	LCD.P[14]	C14	LCD.P[8]
C15	LCD.P[5]	C16	LCD.P[1]	C17	KB.C[0]	D1	DV_{DD5}
D2	FLASH.A[7]	D3	DV_{DD4}	D4	SDRAM.D[15]	D5	DV_{DD4}
D6	SDRAM.D[7]	D7	SDRAM.CKE	D8	DV_{DD4}	D9	SDRAM.A[6]
D10	SDRAM.A[4]	D11	LCD.VS	D12	LCD.P[15]	D13	KB.R[0]
D14	KB.R[1]	D15	LCD.P[2]	D16	KB.C[4]	D17	KB.R[4]
E1	FLASH.A[12]	E2	CV_{DD}	E3	FLASH.A[5]	E4	FLASH.A[6]
E5	V_{SS}	E6	SDRAM.D[8]	E7	SDRAM.D[1]	E8	CV_{DD}
E9	SDRAM.A[10]	E10	DV_{DD4}	E11	LCD.HS	E12	LCD.P[10]
E13	V_{SS}	E14	DV_{DD1}	E15	KB.C[2]	E16	KB.C[1]
E17	KB.R[3]	F1	DV_{DD5}	F2	FLASH.A[11]	F3	FLASH.A[9]
F4	FLASH.A[10]	F5	FLASH.A[8]	F6†	V_{SS}	F7	SDRAM.D[4]
F8	$\overline{\text{SDRAM.CAS}}$	F9	SDRAM.A[7]	F10	CV_{DD3}	F11	LCD.P[12]
F12	V_{SS}	F13	MCBSP1.CLKS	F14	$\overline{\text{PWRON_RESET}}$	F15	KB.R[2]
F16	MCBSP1.FSX/ MCBSP1.DX	F17	MCBSP1.DX/ MCBSP1.FSX	G1	FLASH.A[16]	G2	FLASH.A[17]
G3	FLASH.A[14]	G4	FLASH.A[13]	G5	FLASH.A[15]	G6	FLASH.A[2]
G7	V_{SS}	G8	SDRAM.D[13]	G9	V_{SS}	G10	CV_{DD3}
G11	V_{SS}	G12	CAM.D[6]/ ETM.D[6]/ $\overline{\text{UWIRE.CS3}}$	G13	CAM.EXCLK/ ETM.SYNC/ UWIRE.SDO	G14	CAM.D[7]/ ETM.D[7]/ $\overline{\text{UWIRE.CS0}}$
G15	MCBSP1.CLKX	G16	MCBSP1.DR	G17	CAM.D[3]/ ETM.D[3]/ UART3.RX	H1	$\overline{\text{FLASH.ADV}}$
H2	FLASH.A[20]	H3	FLASH.A[18]	H4	FLASH.A[19]	H5	FLASH.A[21]
H6	FLASH.A[22]	H7	DV_{DD5}	H8	V_{SS}	H9	V_{SS}
H10	V_{SS}	H11	CV_{DD3}	H12	UART3.RX/PWL/ UART2.RX	H13	DV_{DD1}
H14	CAM.D[1]/ETM.D[1]/ UART3.RTS	H15	CAM.LCLK/ ETM.CLK/ UWIRE.SCLK	H16	CAM.D[5]/ ETM.D[5]/ UWIRE.SDI	H17	CAM.D[2]/ ETM.D[2]/ UART3.CTS
J1	$\overline{\text{FLASH.BE[1]}}$	J2	$\overline{\text{FLASH.CS0}}$	J3	FLASH.A[24]	J4	FLASH.A[23]
J5	$\overline{\text{FLASH.BE[0]}}$	J6	V_{SS}	J7	V_{SS}	J8	V_{SS}

† See Section 5.6.1 and Section 5.6.2 for special V_{SS} considerations with ocillator circuits.

Table 2–2. GDY BGA Terminal Assignments (Continued)

GDY BGA BALL #	SIGNAL	GDY BGA BALL #	SIGNAL	GDY BGA BALL #	SIGNAL	GDY BGA BALL #	SIGNAL
J9	V_{SS}	J10	V_{SS}	J11	V_{SS}	J12	V_{SS}
J13	UART3.TX/ PWT/ UART2.TX	J14	CAM.RSTZ/ ETM.PSTAT[0]/ UART2.RTS	J15	CAM.D[4]/ ETM.D[4]/ UART3.TX	J16	CAM.D[0]/ ETM.D[0]/ MPUIO12
J17	CAM.VS/ ETM.PSTAT[2]	K1	$\overline{\text{FLASH.CS1}}$	K2	CV_{DD4}	K3	FLASH.D[1]
K4	FLASH.CLK	K5	$\overline{\text{FLASH.CS2}}$/ $\overline{\text{FLASH.BAA}}$	K6	DV_{DD5}	K7	CV_{DD2}
K8	V_{SS}	K9	V_{SS}	K10	V_{SS}	K11	CV_{DD3}
K12	GPIO3/ SPI.CS3/ MCBSP3.FSX/LED1	K13	GPIO6/ SPI.CS1/ MCBSP3.FSX	K14	GPIO13/ KB.R[5]	K15	CAM.HS/ ETM.PSTAT[1]/ UART2.CTS
K16	GPIO15/ KB.R[7]	K17	GPIO14/ KB.R[6]	L1	$\overline{\text{FLASH.CS3}}$	L2	DV_{DD5}
L3	DV_{DD5}	L4	FLASH.D[2]	L5	FLASH.D[0]	L6	FLASH.D[3]
L7	V_{SS}	L8	CV_{DD2}	L9	V_{SS}	L10	BCLKREQ/ UART3.CTS/ UART1.DSR
L11	V_{SS}	L12	$\overline{\text{UWIRE.CS3}}$/ KB.C[6]	L13	MPUIO5/ LOW_PWR	L14	GPIO4/ SPI.CS2/ MCBSP3.FSX
L15	GPIO12/ MCBSP3.FSX	L16	GPIO11/ HDQ	L17	GPIO7/ MMC.DAT2	M1	FLASH.D[4]
M2	FLASH.D[5]	M3	FLASH.D[11]	M4	FLASH.D[6]	M5	FLASH.D[7]
M6	V_{SS}	M7	UART2.RX/ USB2.VM	M8	GPIO9	M9	MMC.DAT1/ MPUIO7
M10	UART1.CTS	M11	$\overline{\text{RST_OUT}}$	M12	V_{SS}	M13	UWIRE.SCLK/ KB.C[7]
M14	MPUIO1	M15	GPIO2/ SPI.CLK	M16	GPIO0/ SPI.RDY/ USB.VBUS	M17	GPIO1/ UART3.RTS
N1	FLASH.D[9]	N2	FLASH.D[13]	N3	$\overline{\text{FLASH.OE}}$	N4	FLASH.D[8]
N5	V_{SS}	N6	UART2.CTS/ USB2.RCV/ GPIO7	N7	DV_{DD3}	N8	MCLKREQ/ EXT_MASTER_REQ
N9	CLK32K_IN	N10	CLK32K_OUT/ MPUIO0/ USB1.SPEED	N11	RSVD	N12	MCSI1.DOUT/ USB1.TXD
N13	V_{SS}	N14	I2C.SDA	N15	MPUIO4/ $\overline{\text{EXT_DMA_REQ1}}$/ LED2	N16	DV_{DD1}
N17	MPUIO2/ $\overline{\text{EXT_DMA_REQ0}}$	P1	FLASH.D[10]	P2	$\overline{\text{FLASH.WE}}$	P3	OSC1_OUT
P4	USB.DM	P5	USB.DP	P6	MCBSP2.FSR/ GPIO12	P7	MPUIO3
P8	MCSI2.DIN/ USB2.VP	P9	DV_{DD1}	P10	CV_{DD}	P11	BCLK/ UART3.RTS/ UART1.DTR
P12	$\overline{\text{MPU_RST}}$	P13	UART1.TX	P14	MCBSP3.CLKX/ USB1.TXEN	P15	I2C.SCL

† See Section 5.6.1 and Section 5.6.2 for special V_{SS} considerations with ocillator circuits.

Table 2–2. GDY BGA Terminal Assignments (Continued)

GDY BGA BALL #	SIGNAL	GDY BGA BALL #	SIGNAL	GDY BGA BALL #	SIGNAL	GDY BGA BALL #	SIGNAL
P16	UWIRE.SDO/ UART3.DTR/ UART1.DTR/ MCBSP3.DX	P17	UWIRE.SDI/ UART3.DSR/ UART1.DSR/ MCBSP3.DR	R1	FLASH.D[12]	R2	OSC1_IN
R3	$\overline{\text{FLASH.WP}}$	R4	UART2.TX/ USB2.TXD	R5	MCBSP2.DX/ MCBSP2.DR	R6	MCBSP2.DR/ MCBSP2.DX
R7	MCSI2.SYNC/ GPIO7	R8	MMC.DAT2/ MPUIO11	R9	MMC.DAT3/ MPUIO6	R10	MCSI1.DIN/ USB1.RCV
R11	UART1.RX	R12	MPU_BOOT/ MCBSP3.DR/ USB1.SUSP	R13	TMS	R14	$\overline{\text{BFAIL}}$/ $\overline{\text{EXT_FIQ}}$
R15	CV_{DDA}	R16	$\overline{\text{UWIRE.CS0}}$/ MCBSP3.CLKX	R17	EMU0	T1	FLASH.D[14]
T2	$\overline{\text{FLASH.RP}}$	T3	USB.PUEN/ USB.CLKO	T4	UART2.BCLK	T5	MCBSP2.CLKR/ GPIO11
T6	MCBSP2.FSX	T7	MCSI2.DOUT/ USB2.TXEN	T8	MCSI2.CLK/ USB2.SUSP	T9	OSC32K_OUT
T10	OSC32K_IN	T11	MCSI1.SYNC/ USB1.VP	T12	DV_{DD1}	T13	EMU1
T14	TCK	T15	CLK32K_CTRL	T16	CONF	T17	CV_{DD}
U1	DV_{DD5}	U2	FLASH.D[15]	U3	DV_{DD2}	U4	UART2.RTS/ USB2.SE0/ MPUIO5
U5	MCBSP2.CLKX	U6	GPIO8	U7	MCLK	U8	MMC.CMD/SPI.DO
U9	MMC.DAT0/SPI.DI	U10	MMC.CLK	U11	MCSI1.CLK/ USB1.VM	U12	UART1.RTS
U13	RST_HOST_OUT/ MCBSP3.DX/ USB1.SE0	U14	STAT_VAL/ $\overline{\text{WKUP}}$	U15	$\overline{\text{TRST}}$	U16	TDO
U17	TDI						

† See Section 5.6.1 and Section 5.6.2 for special V_{SS} considerations with ocillator circuits.

2.3 Terminal Characteristics and Multiplexing

Table 2–3 describes terminal characteristics and the signals multiplexed on each ball. The table column headers are explained below:

- **SIGNAL NAME:** The names of all the signals that are multiplexed on each ball.
- **TYPE:** The terminal type when a particular signal is multiplexed on the terminal.
- **MUX CTRL SETTING:** The register field that controls multiplexing on the terminal and the proper register field setting necessary to select the signal to be multiplexed on the terminal. The reset values of these register fields are indicated in bold type.
- **DESELECTED INPUT STATE:** The logic level internally driven to the signal when it is not selected to be multiplexed on the corresponding terminal.
- **PULLUP/PULLDN:** Denotes the presence of an internal pullup or pulldown. Pullups and pulldowns can be enabled or disabled via software.
- **BUFFER STRENGTH:** Drive strength of the associated output buffer.

- **OTHER:** Contains various terminal information, such as buffer type, boundary scan capability, and gating/inhibit functionality. Certain terminals may be gated or 3-stated based on the state of other terminals and/or software configuration register settings.
- **RESET STATE:** The state of the terminal at reset.
- **SUPPLY:** The voltage supply which powers the terminal's I/O buffers.

NOTE: Due to the extensive pin multiplexing options which are available on the OMAP5910 device, a software utility is available to ease the process of configuring the pins based on the peripheral set required by a specific application. The 5910 OMAP Pin Configuration Utility is currently available from Texas Instruments.

NOTE: Configuring two pins to the same input signal is not supported as it can yield unexpected results. This can be easily avoided with proper software configuration.

Table 2–3. Terminal Characteristics and Multiplexing

GZG BALL	GDY BALL	SIGNAL NAME	TYPE†	MUX CTRL SETTING‡	DESELECTED INPUT STATE	PU/ PD§	BUFFER STRENGTH	OTHER¶	RESET STATE#	SUPPLY
C3	A1	$\overline{\text{SDRAM.WE}}$	O/Z	NA	NA		4 mA	A	1	DV_{DD4}
A2	C4	$\overline{\text{SDRAM.RAS}}$	O/Z	NA	NA		4 mA	A	1	DV_{DD4}
D4	A2	$\overline{\text{SDRAM.DQMU}}$	O/Z	NA	NA		4 mA	A	1	DV_{DD4}
B3	B2	$\overline{\text{SDRAM.DQML}}$	O/Z	NA	NA		4 mA	A	1	DV_{DD4}
D5 C4 B4 D6 C5 H8 C6 B6 D7 C7 D8 B8 G8 C8 G9 B9	D4 C5 G8 B4 B5 C6 A3 E6 D6 A4 B6 F7 C7 B7 E7 A6	SDRAM.D[15:0]	I/O/Z	NA	NA		4 mA	E	0	DV_{DD4}
D9	D7	SDRAM.CKE	O/Z	NA	NA		4 mA	A	1	DV_{DD4}
C9	A7	SDRAM.CLK	I/O/Z	NA	NA		8 mA	E	LZ	DV_{DD4}
H9	F8	$\overline{\text{SDRAM.CAS}}$	O/Z	NA	NA		4 mA	A	1	DV_{DD4}
D10 C10	C9 B8	SDRAM.BA[1:0]	O/Z	NA	NA		4 mA	A	0	DV_{DD4}

† I = Input, O = Output, Z = High-Impedance
‡ 'regx' denotes the terminal multiplexing register that controls the specified terminal where regx = FUNC_MUX_CTRL_x
§ PD20 = 20-µA internal pulldown, PD100 = 100-µA pulldown, PU20 = 20-µA internal pullup, PU100 = 100-µA internal pullup
¶ A = Standard LVCMOS input/output
B = Fail-safe LVCMOS input/output
C = USB transceiver input/output
D = I^2C input/output buffers
E = Fail-safe LVCMOS input and Standard LVCMOS output
F = analog oscillator terminals
G1 = Terminal may be gated by BFAIL
G2 = Terminal may be gated by GPIO9 and MPUIO3
G3 = Terminal may be gated by BFAIL and $\overline{\text{PWRON_RESET}}$
H1 = Terminal may be 3-stated by BFAIL input
J = Boundary-scannable terminal
# Z = High-Impedance, LZ = Low-Impedance (pin is driven), 1 = Output driven high, 0 = Output driven low
|| UART1 signals can be multiplexed to this pin via additional multiplexing in the USB module.

Table 2–3. Terminal Characteristics and Multiplexing (Continued)

GZG BALL	GDY BALL	SIGNAL NAME	TYPE†	MUX CTRL SETTING‡	DESELECTED INPUT STATE	PU/ PD§	BUFFER STRENGTH	OTHER¶	RESET STATE#	SUPPLY
G10 H10 C11 D11 G11 C12 D12 H11 C13 D13 G12 C14 B14	C8 B9 E9 A8 C10 F9 D9 A9 D10 C11 B10 A10 B11	SDRAM.A[12:0]	O/Z	NA	NA		4 mA	A	0	DV_{DD4}
D14	D11	LCD.VS	O	NA	NA		4 mA	J, A, G1	0	DV_{DD1}
H12	E11	LCD.HS	O	NA	NA		4 mA	J, A, G1	0	DV_{DD1}
B15	A11	LCD.AC	O	NA	NA		4 mA	J, A, G1	0	DV_{DD1}
C15	A12	LCD.PCLK	O	NA	NA		4 mA	J, A, G1	0	DV_{DD1}
D15 C16 A17 G13 B17 C17 D16 D17 C18 B19 A20 H13 G14 C19 B21 D18	D12 C13 B12 F11 B13 E12 A13 C14 B14 A15 C15 B15 A16 D15 C16 B16	LCD.P[15:0]	O	NA	NA		4 mA	J, A, G1	0	DV_{DD1}
C20 C21 E18 D19 D20 F18	A17 D16 B17 E15 E16 C17	KB.C[5:0]	O	NA	NA		4 mA	A, J	0	DV_{DD1}
E19 E20 H14 F19 G18	D17 E17 F15 D14 D13	KB.R[4:0]	I	NA	NA			A, J	input	DV_{DD1}
G19	F14	$\overline{\text{PWRON_RESET}}$	I	NA	NA			B, J	input	DV_{DD1}
G20	F13	MCBSP1.CLKS	I	NA	NA			B, J	input	DV_{DD1}
G21	G15	MCBSP1.CLKX	I/O/Z	NA	NA		4 mA	J, B, G1	Z	DV_{DD1}
H15	F17	MCBSP1.FSX	I/O/Z	**reg4[14:12] = 000**	0		4 mA	J, B, G1	Z	DV_{DD1}
		MCBSP1.DX	O	reg4[14:12] = 001	NA					

† I = Input, O = Output, Z = High-Impedance
‡ 'regx' denotes the terminal multiplexing register that controls the specified terminal where regx = FUNC_MUX_CTRL_x
§ PD20 = 20-µA internal pulldown, PD100 = 100-µA pulldown, PU20 = 20-µA internal pullup, PU100 = 100-µA internal pullup
¶ A = Standard LVCMOS input/output
B = Fail-safe LVCMOS input/output
C = USB transceiver input/output
D = I^2C input/output buffers
E = Fail-safe LVCMOS input and Standard LVCMOS output
F = analog oscillator terminals
G1 = Terminal may be gated by BFAIL
G2 = Terminal may be gated by GPIO9 and MPUIO3
G3 = Terminal may be gated by BFAIL and $\overline{\text{PWRON_RESET}}$
H1 = Terminal may be 3-stated by BFAIL input
J = Boundary-scannable terminal
# Z = High-Impedance, LZ = Low-Impedance (pin is driven), 1 = Output driven high, 0 = Output driven low
‖ UART1 signals can be multiplexed to this pin via additional multiplexing in the USB module.

Table 2–3. Terminal Characteristics and Multiplexing (Continued)

GZG BALL	GDY BALL	SIGNAL NAME	TYPE†	MUX CTRL SETTING‡	DESELECTED INPUT STATE	PU/ PD§	BUFFER STRENGTH	OTHER¶	RESET STATE#	SUPPLY
H18	F16	MCBSP1.DX	O	**reg4[17:15] = 000**	NA		4 mA	J, B, G1	0	DV_{DD1}
		MCBSP1.FSX	I/O/Z	reg4[17:15] = 001	0					
H20	G16	MCBSP1.DR	I	NA	NA	PD20		B , J	input	DV_{DD1}
H19	G13	CAM.EXCLK	O	**reg4[23:21] = 000**	NA		8 mA	J, A, G1	0	DV_{DD1}
		ETM.SYNC	O	reg4[23:21] = 001	NA					
		UWIRE.SDO	O	reg4[23:21] = 010	NA					
J15	H15	CAM.LCLK	I	**reg4[26:24] = 000**	0		8 mA	B, J	input	DV_{DD1}
		ETM.CLK	O	reg4[26:24] = 001	NA					
		UWIRE.SCLK	O	reg4[26:24] = 010	NA					
J18	G14	CAM.D[7]	I	**reg4[29:27] = 000**	NA		8 mA	B, J	input	DV_{DD1}
		ETM.D[7]	O	reg4[29:27] = 001	NA					
		$\overline{\text{UWIRE.CS0}}$	O	reg4[29:27] = 010	NA					
J19	G12	CAM.D[6]	I	**reg5[2:0] = 000**	NA		8 mA	B, J	input	DV_{DD1}
		ETM.D[6]	O	reg5[2:0] = 001	NA					
		$\overline{\text{UWIRE.CS3}}$	O	reg5[2:0] = 010	NA					
J14	H16	CAM.D[5]	I	**reg5[5:3] = 000**	NA		8 mA	B, J	input	DV_{DD1}
		ETM.D[5]	O	reg5[5:3] = 001	NA					
		UWIRE.SDI	I	reg5[5:3] = 010	NA	PD20				
K18	J15	CAM.D[4]	I	**reg5[8:6] = 000**	NA		8 mA	B, J	input	DV_{DD8}
		ETM.D[4]	O	reg5[8:6] = 001	NA					
		UART3.TX	O	reg5[8:6] = 010	NA					
K19	G17	CAM.D[3]	I	**reg5[11:9] = 000**	NA		8 mA	B, J	input	DV_{DD1}
		ETM.D[3]	O	reg5[11:9] = 001	NA					
		UART3.RX	I	reg5[11:9] = 010	NA	PD20				
K15	H17	CAM.D[2]	I	**reg5[14:12] = 000**	NA		8 mA	B, J	input	DV_{DD1}
		ETM.D[2]	O	reg5[14:12] = 001	NA					
		UART3.CTS	I	reg5[14:12] = 010	NA	PD20				
K14	H14	CAM.D[1]	I	**reg5[17:15] = 000**	NA		8 mA	B, J	input	DV_{DD1}
		ETM.D[1]	O	reg5[17:15] = 001	NA					
		UART3.RTS	O	reg5[17:15] = 010	NA					
L19	J16	CAM.D[0]	I	**reg5[20:18] = 000**	NA		8 mA	B, J	input	DV_{DD1}
		ETM.D[0]	O	reg5[20:18] = 001	NA					
		MPUIO12	I/O/Z	reg5[20:18] = 010	NA					
L18	J17	CAM.VS	I	**reg5[23:21] = 000**	NA		8 mA	B, J	input	DV_{DD1}
		ETM.PSTAT[2]	O	reg5[23:21] = 001	NA					
L15	K15	CAM.HS	I	**reg5[26:24] = 000**	NA		8 mA	B, J	input	DV_{DD1}
		ETM.PSTAT[1]	O	reg5[26:24] = 001	NA					
		UART2.CTS	I	reg5[26:24] = 010	NA	PD20				

† I = Input, O = Output, Z = High-Impedance
‡ 'regx' denotes the terminal multiplexing register that controls the specified terminal where regx = FUNC_MUX_CTRL_x
§ PD20 = 20-µA internal pulldown, PD100 = 100-µA pulldown, PU20 = 20-µA internal pullup, PU100 = 100-µA internal pullup
¶ A = Standard LVCMOS input/output
B = Fail-safe LVCMOS input/output
C = USB transceiver input/output
D = I^2C input/output buffers
E = Fail-safe LVCMOS input and Standard LVCMOS output
F = analog oscillator terminals
G1 = Terminal may be gated by BFAIL
G2 = Terminal may be gated by GPIO9 and MPUIO3
G3 = Terminal may be gated by BFAIL and $\overline{\text{PWRON_RESET}}$
H1 = Terminal may be 3-stated by BFAIL input
J = Boundary-scannable terminal
# Z = High-Impedance, LZ = Low-Impedance (pin is driven), 1 = Output driven high, 0 = Output driven low
‖ UART1 signals can be multiplexed to this pin via additional multiplexing in the USB module.

Table 2–3. Terminal Characteristics and Multiplexing (Continued)

GZG BALL	GDY BALL	SIGNAL NAME	TYPE†	MUX CTRL SETTING‡	DESELECTED INPUT STATE	PU/ PD§	BUFFER STRENGTH	OTHER¶	RESET STATE#	SUPPLY
M19	J14	CAM.RSTZ	O	**reg5[29:27] = 000**	NA		8 mA	J, B, G1	0	DV_{DD1}
		ETM.PSTAT[0]	O	reg5[29:27] = 001	NA					
		UART2.RTS	O	reg5[29:27] = 010	NA					
M18	J13	*pin forced to drive low*	O	**reg6[2:0] = 000**	NA		4 mA	J, A, G1	0	DV_{DD1}
		UART3.TX	O	reg6[2:0] = 001	NA					
		PWT	O	reg6[2:0] = 010	NA					
		IRQ_OBS	O	reg6[2:0] = 011	NA					
		UART2.TX	O	reg6[2:0] = 100	NA					
L14	H12	UART3.RX	I	**reg6[5:3] = 000**	1		4 mA	B, J	input	DV_{DD1}
		PWL	O	reg6[5:3] = 001	NA					
		DMA_REQ_OBS	O	reg6[5:3] = 010	NA					
		UART2.RX	I	reg6[5:3] = 011	NA					
M20	K16	GPIO15	I/O/Z	**reg6[8:6] = 000**	NA	PD20	4 mA	J, B, G1	input	DV_{DD1}
		KB.R[7]	I	reg6[8:6] = 001	1					
N21	K17	GPIO14	I/O/Z	**reg6[11:9] = 000**	NA	PD20	4 mA	J, B, G1	input	DV_{DD1}
		KB.R[6]	I	reg6[11:9] = 001	1					
N19		GPIO13	I/O/Z	**reg6[14:12] = 000**	NA	PD20	4 mA	J, B, G1	input	DV_{DD1}
		KB.R[5]	I	reg6[14:12] = 001	1					
N18	L15	GPIO12	I/O/Z	**reg6[17:15] = 000**	NA	PD20	4 mA	J, B, G1	input	DV_{DD1}
		MCBSP3.FSX	I/O/Z	reg6[17:15] = 001	0	PD20				
N20	L16	GPIO11	I/O/Z	**reg6[20:18] = 000**	NA	PD20	4 mA	J, B, G1	input	DV_{DD1}
		HDQ	I/O	reg6[20:18] = 001	NA	PD20				
M15	L17	GPIO7	I/O/Z	**reg6[23:21] = 000**	NA	PD20	4 mA	J, B, G1	input	DV_{DD1}
		MMC.DAT2	I/O/Z	reg6[23:21] = 001	1					
P19	K13	GPIO6	I/O/Z	**reg6[26:24] = 000**	NA	PD20	4 mA	J, B, G1	input	DV_{DD1}
		SPI.CS1	O	reg6[26:24] = 001	NA					
		MCBSP3.FSX	I/O/Z	reg6[26:24] = 010	NA	PD20				
P20	L14	GPIO4	I/O/Z	**reg6[29:27] = 000**	NA	PD20	4 mA	J, B, G1	input	DV_{DD1}
		SPI.CS2	O	reg6[29:27] = 001	NA					
		MCBSP3.FSX	I/O/Z	reg6[29:27] = 010	NA	PD20				
P18	K12	GPIO3	I/O/Z	**reg7[2:0] = 000**	NA	PD20	4 mA	J, B, G1	input	DV_{DD1}
		SPI.CS3	O	reg7[2:0] = 001	NA					
		MCBSP3.FSX	I/O/Z	reg7[2:0] = 010	NA	PD20				
		LED1	O	reg7[2:0] = 011	NA					
M14	M15	GPIO2	I/O/Z	**reg7[5:3] = 000**	NA	PD20	4 mA	J, B, G1	input	DV_{DD1}
		SPI.CLK	O	reg7[5:3] = 001	NA					

† I = Input, O = Output, Z = High-Impedance
‡ 'regx' denotes the terminal multiplexing register that controls the specified terminal where regx = FUNC_MUX_CTRL_x
§ PD20 = 20-µA internal pulldown, PD100 = 100-µA pulldown, PU20 = 20-µA internal pullup, PU100 = 100-µA internal pullup
¶ A = Standard LVCMOS input/output
B = Fail-safe LVCMOS input/output
C = USB transceiver input/output
D = I^2C input/output buffers
E = Fail-safe LVCMOS input and Standard LVCMOS output
F = analog oscillator terminals
G1 = Terminal may be gated by BFAIL
G2 = Terminal may be gated by GPIO9 and MPUIO3
G3 = Terminal may be gated by BFAIL and $\overline{\text{PWRON_RESET}}$
H1 = Terminal may be 3-stated by BFAIL input
J = Boundary-scannable terminal
# Z = High-Impedance, LZ = Low-Impedance (pin is driven), 1 = Output driven high, 0 = Output driven low
‖ UART1 signals can be multiplexed to this pin via additional multiplexing in the USB module.

Table 2–3. Terminal Characteristics and Multiplexing (Continued)

GZG BALL	GDY BALL	SIGNAL NAME	TYPE†	MUX CTRL SETTING‡	DESELECTED INPUT STATE	PU/ PD§	BUFFER STRENGTH	OTHER¶	RESET STATE#	SUPPLY
R19	M17	GPIO1	I/O/Z	**reg7[8:6] = 000**	NA	PD20	4 mA	J, B, G1	input	DV_{DD1}
		UART3.RTS	O	reg7[8:6] = 001	NA					
R18	M16	GPIO0	I/O/Z	**reg7[11:9] = 000**	NA	PD20	4 mA	J, B, G1	input	DV_{DD1}
		SPI.RDY	I	reg7[11:9] = 001	NA					
		USB.VBUS	I	reg7[11:9] = 010	0	PD20				
T20	L13	MPUIO5	I/O/Z	**reg7[14:12] = 000**	NA	PD20	4 mA	J, B, G1	input	DV_{DD1}
		LOW_PWR	O	reg7[14:12] = 001	NA					
T19	N15	MPUIO4	I/O/Z	**reg7[17:15] = 000**	NA	PD20	4 mA	J, B, G1	input	DV_{DD1}
		$\overline{\text{EXT_DMA_REQ1}}$	I	reg7[17:15] = 001	NA					
		LED2	O	reg7[17:15] = 010	NA					
N15	N17	MPUIO2	I/O/Z	**reg7[20:18] = 000**	NA	PD20	4 mA	J, B, G1	input	DV_{DD1}
		$\overline{\text{EXT_DMA_REQ0}}$	I	reg7[20:18] = 001	NA					
U19	M14	MPUIO1	I/O/Z	NA	NA		4 mA	B, J	input	DV_{DD1}
T18	P15	I2C.SCL	I/O/Z	NA	NA		6 mA	J, D, H1	Z	DV_{DD1}
V20	N14	I2C.SDA	I/O/Z	NA	NA		6 mA	J, D, H1	Z	DV_{DD1}
U18	P17	UWIRE.SDI	I	**reg8[2:0] = 000**	NA	PD20	4 mA	B, J	input	DV_{DD1}
		UART3.DSR	I	reg8[2:0] = 001	1	PD20				
		UART1.DSR	I	reg8[2:0] = 010	1	PD20				
		MCBSP3.DR	I	reg8[2:0] = 011	NA	PD20				
W21	P16	UWIRE.SDO	O	**reg8[5:3] = 000**	NA		4 mA	J, A, G1	0	DV_{DD1}
		UART3.DTR	O	reg8[5:3] = 001	NA					
		UART1.DTR	O	reg8[5:3] = 010	NA					
		MCBSP3.DX	O	reg8[5:3] = 011	NA					
V19	M13	UWIRE.SCLK	O	**reg8[8:6] = 000**	NA		4 mA	J, A, G1	0	DV_{DD1}
		KB.C[7]	O	reg8[8:6] = 001	NA					
N14	R16	*pin forced to high-z*	Z	**reg8[11:9] = 000**	NA		4 mA	J, A	Z	DV_{DD1}
		$\overline{\text{UWIRE.CS0}}$	O	reg8[11:9] = 001	NA					
		MCBSP3.CLKX	I/O/Z	reg8[11:9] = 010	NA					
P15	L12	*pin forced to high-z*	Z	**reg8[14:12] = 000**	NA		4 mA	J, A	Z	DV_{DD1}
		$\overline{\text{UWIRE.CS3}}$	O	reg8[14:12] = 001	NA					
		KB.C[6]	O	reg8[14:12] = 010	NA					
W19	R14	BFAIL/$\overline{\text{EXT_FIQ}}$	I	NA	NA			J, B	input	DV_{DD1}
AA20	T15	CLK32K_CTRL	I	NA	NA			J, B	input	DV_{DD1}
V18	T16	CONF	I	NA	NA	PD100		A	input	DV_{DD1}
Y19	U17	TDI	I	NA	NA	PD20		B	input	DV_{DD1}
AA19	U16	TDO	O	NA	NA		4 mA	A	0	DV_{DD1}
V17	R13	TMS	I	NA	NA	PD20		B	input	DV_{DD1}

† I = Input, O = Output, Z = High-Impedance
‡ 'regx' denotes the terminal multiplexing register that controls the specified terminal where regx = FUNC_MUX_CTRL_x
§ PD20 = 20-µA internal pulldown, PD100 = 100-µA pulldown, PU20 = 20-µA internal pullup, PU100 = 100-µA internal pullup
¶ A = Standard LVCMOS input/output
B = Fail-safe LVCMOS input/output
C = USB transceiver input/output
D = I^2C input/output buffers
E = Fail-safe LVCMOS input and Standard LVCMOS output
F = analog oscillator terminals
G1 = Terminal may be gated by BFAIL
G2 = Terminal may be gated by GPIO9 and MPUIO3
G3 = Terminal may be gated by BFAIL and $\overline{\text{PWRON_RESET}}$
H1 = Terminal may be 3-stated by BFAIL input
J = Boundary-scannable terminal
# Z = High-Impedance, LZ = Low-Impedance (pin is driven), 1 = Output driven high, 0 = Output driven low
‖ UART1 signals can be multiplexed to this pin via additional multiplexing in the USB module.

Table 2–3. Terminal Characteristics and Multiplexing (Continued)

GZG BALL	GDY BALL	SIGNAL NAME	TYPE†	MUX CTRL SETTING‡	DESELECTED INPUT STATE	PU/ PD§	BUFFER STRENGTH	OTHER¶	RESET STATE#	SUPPLY
W18	T14	TCK	I	NA	NA	PD20		B	input	DV_{DD1}
Y18	U15	$\overline{TRST}$	I	NA	NA	PD100		B	input	DV_{DD1}
V16	R17	EMU0	I/O/Z	NA	NA	PU100	2 mA	B	Z	DV_{DD1}
W17	T13	EMU1	I/O/Z	NA	NA	PU100	2 mA	B	Z	DV_{DD1}
Y17	U14	STAT_VAL/$\overline{WKUP}$	I	NA	NA			A	input	DV_{DD1}
AA17	R12	MPU_BOOT	I	**reg8[29:27] = 000**	NA	PD20	4 mA	J, B	input	DV_{DD1}
		MCBSP3_DR	I	reg8[29:27] = 001	NA	PD20				
		USB1_SUSP	O	reg8[29:27] = 010	NA					
P14	U13	RST_HOST_OUT	O	**reg9[2:0] = 000**	NA		4 mA	J, A, G1	0	DV_{DD1}
		MCBSP3.DX	O	reg9[2:0] = 001	NA					
		USB1.SE0	O	reg9[2:0] = 010	NA					
W16	P14	*pin forced to high-z*	Z	**reg9[5:3] = 000**	NA	PD20	4 mA	J, A, G1	Z	DV_{DD1}
		MCBSP3.CLKX	I/O/Z	reg9[5:3] = 001	NA	PD20				
		USB1.TXEN	O	reg9[5:3] = 010	NA					
V15	P12	$\overline{MPU_RST}$	I	NA	NA			J, B	input	DV_{DD1}
W15	M11	$\overline{RST_OUT}$	O	NA	NA		4 mA	J, A	0	DV_{DD1}
AA15	U12	*pin forced to drive low*	O	**reg9[14:12] = 000**	NA		2 mA	J, A, G1	0	DV_{DD1}
		UART1.RTS	O	reg9[14:12] = 001	NA					
R14	M10	UART1.CTS	I	NA	NA	PD20		J, B	input	DV_{DD1}
V14	R11	UART1.RX	I	NA	NA	PD20		J, B	input	DV_{DD1}
Y14	P13	*pin forced to drive low*	O	**reg9[23:21] = 000**	NA		2 mA	J, A, G1	0	DV_{DD1}
		UART1.TX	O	reg9[23:21] = 001	NA					
W14	N12	MCSI1.DOUT	O	**reg9[26:24] = 000**	NA		2 mA	J, A, G1, H1	0	DV_{DD1}
		USB1.TXD	O	reg9[26:24] = 001	NA					
		UART1.TX	O	reg9[26:24] = 001‖	NA					
R13	L10	BCLKREQ	I	**reg9[29:27] = 000**	0	PD20		J, B	input	DV_{DD1}
		UART3.CTS	I	reg9[29:27] = 001	0	PD20				
		UART1.DSR	I	reg9[29:27] = 010	1	PD20				
Y13	P11	BCLK	O	**regA[2:0] = 000**	NA		4 mA	J, A, G1	0	DV_{DD1}
		UART3.RTS	O	regA[2:0] = 001	NA					
		UART1.DTR	O	regA[2:0] = 010	NA					
V13	T11	MCSI1.SYNC	I/O/Z	**regA[5:3] = 000**	0	PD20	2 mA	J, B, G1	input	DV_{DD1}
		USB1.VP	I	regA[5:3] = 001	NA	PD20				

† I = Input, O = Output, Z = High-Impedance
‡ 'regx' denotes the terminal multiplexing register that controls the specified terminal where regx = FUNC_MUX_CTRL_x
§ PD20 = 20-µA internal pulldown, PD100 = 100-µA pulldown, PU20 = 20-µA internal pullup, PU100 = 100-µA internal pullup
¶ A = Standard LVCMOS input/output
B = Fail-safe LVCMOS input/output
C = USB transceiver input/output
D = I^2C input/output buffers
E = Fail-safe LVCMOS input and Standard LVCMOS output
F = analog oscillator terminals
G1 = Terminal may be gated by BFAIL
G2 = Terminal may be gated by GPIO9 and MPUIO3
G3 = Terminal may be gated by BFAIL and $\overline{PWRON_RESET}$
H1 = Terminal may be 3-stated by BFAIL input
J = Boundary-scannable terminal
# Z = High-Impedance, LZ = Low-Impedance (pin is driven), 1 = Output driven high, 0 = Output driven low
‖ UART1 signals can be multiplexed to this pin via additional multiplexing in the USB module.

Table 2–3. Terminal Characteristics and Multiplexing (Continued)

GZG BALL	GDY BALL	SIGNAL NAME	TYPE†	MUX CTRL SETTING‡	DESELECTED INPUT STATE	PU/ PD§	BUFFER STRENGTH	OTHER¶	RESET STATE#	SUPPLY
AA13	U11	MCSI1.CLK	I/O/Z	**regA[8:6] = 000**	0	PD20	2 mA	J, B, G1	input	DV_{DD1}
		USB1.VM	I	regA[8:6] = 001	0	PD20				
		UART1.RX	I	regA[8:6] = 001‖	0	PD20				
W13	R10	MCSI1.DIN	I	**regA[11:9] = 000**	NA	PD20		J, B	input	DV_{DD1}
		USB1.RCV	I	regA[11:9] = 001	0	PD20				
		UART1.CTS	I	regA[11:9] = 001‖	0	PD20				
Y12	N10	CLK32K_OUT	O	**regA[14:12] = 000**	NA		8 mA	J, A	LZ	DV_{DD1}
		MPUIO0	I/O/Z	regA[14:12] = 001	NA					
		USB1.SPEED	O	regA[14:12] = 010	NA					
P13	N9	CLK32K_IN	I	NA	NA			J, B	input	DV_{DD1}
W12	T10	OSC32K_IN	–	NA	NA			F	NA	NA
R12	T9	OSC32K_OUT	–	NA	NA			F	NA	NA
W11	R9	MMC.DAT3	I/O/Z	**regD[14:12] = 000**	1	PU20	4 mA	J, B, G1	input	DV_{DD1}
		Reserved	NA	regD[14:12] = 001	NA					
		MPUIO6	I/O/Z	regD[14:12] = 010	NA	PU20				
V11	U10	MMC.CLK	O	NA	NA		4 mA	J, A, G1	0	DV_{DD1}
R11	U9	MMC.DAT0/SPI.DI	I/O/Z	NA	NA	PU20	4 mA	J, B, G1	input	DV_{DD1}
W10	R8	MMC.DAT2	I/O/Z	**regA[20:18] = 000**	1	PU20	4 mA	J, B, G1	input	DV_{DD1}
		pin forced to hi-z	Z	regA[20:18] = 001	NA					
		MPUIO11	I/O/Z	regA[20:18] = 010	NA	PU20				
V10	M9	MMC.DAT1	I/O/Z	**regA[26:24] = 000**	1	PU20	4 mA	J, B, G1	input	DV_{DD1}
		Reserved	NA	regA[26:24] = 001	NA					
		MPUIO7	I/O/Z	regA[26:24] = 010	NA	PU20				
P11	U8	MMC.CMD/SPI.DO	I/O/Z	NA	NA	PU100	4 mA	J, B, G1	input	DV_{DD1}
Y10	T8	MCSI2.CLK	I/O/Z	**regB[5:3] = 000**	0	PD20	4 mA	J, E	input	DV_{DD3}
		USB2.SUSP	O	regB[5:3] = 001	NA					
AA9	P8	MCSI2.DIN	I	**regB[8:6] = 000**	NA	PD20		J, B	input	DV_{DD3}
		USB2.VP	I	regB[8:6] = 001	0	PD20				
W9	T7	MCSI2.DOUT	O	**regB[11:9] = 000**	NA		4 mA	J, A, G2	0	DV_{DD3}
		USB2.TXEN	O	regB[11:9] = 001	NA					
V9	R7	MCSI2.SYNC	I/O/Z	**regB[14:12] = 000**	0	PD20	4 mA	J, E	input	DV_{DD3}
		GPIO7	I/O/Z	regB[14:12] = 001	NA	PD20				
Y9	U7	MCLK	O	NA	NA		4 mA	J, A, G1	0	DV_{DD3}
R10	N8	MCLKREQ	I	**regB[20:18] = 000**	0	PD20	4 mA	J, E	input	DV_{DD3}
		EXT_MASTER_REQ	O	regB[20:18] = 001	NA					
W8	M8	GPIO9	I/O/Z	NA	NA	PD20	4 mA	J, E, G3	input	DV_{DD3}
Y8	U6	GPIO8	I/O/Z	NA	NA	PD20	4 mA	J, E, G3	input	DV_{DD3}

† I = Input, O = Output, Z = High-Impedance
‡ 'regx' denotes the terminal multiplexing register that controls the specified terminal where regx = FUNC_MUX_CTRL_x
§ PD20 = 20-µA internal pulldown, PD100 = 100-µA pulldown, PU20 = 20-µA internal pullup, PU100 = 100-µA internal pullup
¶ A = Standard LVCMOS input/output
B = Fail-safe LVCMOS input/output
C = USB transceiver input/output
D = I^2C input/output buffers
E = Fail-safe LVCMOS input and Standard LVCMOS output
F = analog oscillator terminals
G1 = Terminal may be gated by BFAIL
G2 = Terminal may be gated by GPIO9 and MPUIO3
G3 = Terminal may be gated by BFAIL and $\overline{\text{PWRON_RESET}}$
H1 = Terminal may be 3-stated by BFAIL input
J = Boundary-scannable terminal
# Z = High-Impedance, LZ = Low-Impedance (pin is driven), 1 = Output driven high, 0 = Output driven low
‖ UART1 signals can be multiplexed to this pin via additional multiplexing in the USB module.

Table 2–3. Terminal Characteristics and Multiplexing (Continued)

GZG BALL	GDY BALL	SIGNAL NAME	TYPE†	MUX CTRL SETTING‡	DESELECTED INPUT STATE	PU/ PD§	BUFFER STRENGTH	OTHER¶	RESET STATE#	SUPPLY
V8	P7	MPUIO3	I/O/Z	NA	NA	PD20	4 mA	J, E, G1	input	DV_{DD3}
P10	R6	MCBSP2.DR	I	**regC[2:0] = 000**	NA	PD20	4 mA	J, B, G2	input	DV_{DD3}
		MCBSP2.DX	O	regC[2:0] = 001	NA					
W7	T6	MCBSP2.FSX	I/O/Z	NA	0	PD20	4 mA	J, E, G2	input	DV_{DD3}
V7	T5	MCBSP2.CLKR	I/O/Z	**regC[8:6] = 000**	0		4 mA	J, E	Z	DV_{DD3}
		GPIO11	I/O/Z	regC[8:6] = 001	NA	PD20				
Y6	U5	MCBSP2.CLKX	I/O/Z	NA	NA	PD20	4 mA	J, E, G2	input	DV_{DD3}
W6	P6	MCBSP2.FSR	I/O/Z	**regC[14:12] = 000**	0		4 mA	J, E	Z	DV_{DD3}
		GPIO12	I/O/Z	regC[14:12] = 001	NA	PD20				
AA5	R5	MCBSP2.DX	O	**regC[17:15] = 000**	NA		4 mA	J, E, G2	0	DV_{DD3}
		MCBSP2.DR	I	regC[17:15] = 001	NA	PD20				
R9	M7	UART2.RX	I	**regC[20:18] = 000**	1	PD20	4 mA	J, B	input	DV_{DD3}
		USB2.VM	I	regC[20:18] = 001	0	PD20				
Y5	N6	UART2.CTS	I	**regC[23:21] = 000**	1	PD20	4 mA	J, B	input	DV_{DD3}
		USB2.RCV	I	regC[23:21] = 001	0	PD20		J, B		
		GPIO7	I/O/Z	regC[23:21] = 010	NA	PD20		J, E		
W5	U4	*pin forced to drive low*	O	**regC[26:24] = 000**	NA		4 mA	J, E, G2	0	DV_{DD3}
		UART2.RTS	O	regC[26:24] = 001	NA					
		USB2.SE0	O	regC[26:24] = 010	NA					
		MPUIO5	I/O/Z	regC[26:24] = 011	NA					
V6	R4	*pin forced to drive low*	O	**regC[29:27] = 000**	NA		4 mA	J, A, G2	0	DV_{DD3}
		UART2.TX	O	regC[29:27] = 001	NA					
		USB2.TXD	O	regC[29:27] = 010	NA					
Y4	T4	UART2.BCLK	O	NA	NA		4 mA	J, A, G2	0	DV_{DD3}
W4	T3	USB.PUEN	O	**regD[5:3] = 000**	NA		8 mA	J, B, G1	0	DV_{DD2}
		USB.CLKO	O	regD[5:3] = 001	NA					
P9	P5	USB.DP	I/O/Z	NA	NA		18.3 mA	C	Z	DV_{DD2}
R8	P4	USB.DM	I/O/Z	NA	NA		18.3 mA	C	Z	DV_{DD2}
Y2	R2	OSC1_IN	–	NA	NA			F	NA	NA
W3	P3	OSC1_OUT	–	NA	NA			F	NA	NA
V4	R3	$\overline{\text{FLASH.WP}}$	O/Z	NA	NA		4 mA	A	0	DV_{DD5}
W2	P2	$\overline{\text{FLASH.WE}}$	O/Z	NA	NA		4 mA	A	1	DV_{DD5}
W1	T2	$\overline{\text{FLASH.RP}}$	O/Z	NA	NA		4 mA	A	0	DV_{DD5}
U4	N3	$\overline{\text{FLASH.OE}}$	O/Z	NA	NA		4 mA	A	1	DV_{DD5}

† I = Input, O = Output, Z = High-Impedance
‡ 'regx' denotes the terminal multiplexing register that controls the specified terminal where regx = FUNC_MUX_CTRL_x
§ PD20 = 20-µA internal pulldown, PD100 = 100-µA pulldown, PU20 = 20-µA internal pullup, PU100 = 100-µA internal pullup
¶ A = Standard LVCMOS input/output
B = Fail-safe LVCMOS input/output
C = USB transceiver input/output
D = I^2C input/output buffers
E = Fail-safe LVCMOS input and Standard LVCMOS output
F = analog oscillator terminals
G1 = Terminal may be gated by BFAIL
G2 = Terminal may be gated by GPIO9 and MPUIO3
G3 = Terminal may be gated by BFAIL and $\overline{\text{PWRON_RESET}}$
H1 = Terminal may be 3-stated by BFAIL input
J = Boundary-scannable terminal
# Z = High-Impedance, LZ = Low-Impedance (pin is driven), 1 = Output driven high, 0 = Output driven low
‖ UART1 signals can be multiplexed to this pin via additional multiplexing in the USB module.

Table 2–3. Terminal Characteristics and Multiplexing (Continued)

GZG BALL	GDY BALL	SIGNAL NAME	TYPE†	MUX CTRL SETTING‡	DESELECTED INPUT STATE	PU/ PD§	BUFFER STRENGTH	OTHER¶	RESET STATE#	SUPPLY
V3 T4 U3 U1 P8 T3 T2 R4 R3 R2 P7 P4 P2 N7 N2 N4	U2 T1 N2 R1 M3 P1 N1 N4 M5 M4 M2 M1 L6 L4 K3 L5	FLASH.D[15:0]	I/O/Z	NA	NA		4 mA	E	0	DV_{DD5}
N3	K4	FLASH.CLK	O/Z	NA	NA		8 mA	E, G1, H2	0	DV_{DD5}
N8	L1	$\overline{\text{FLASH.CS3}}$	O/Z	NA	NA		4 mA	A	1	DV_{DD5}
M4	K5	$\overline{\text{FLASH.CS2}}$	O/Z	**regD[8:6] = 000**	NA		4 mA	A	1	DV_{DD5}
		$\overline{\text{FLASH.BAA}}$	O/Z	regD[8:6] = 001	NA					
M3	K1	$\overline{\text{FLASH.CS1}}$	O/Z	NA	NA		4 mA	A	1	DV_{DD5}
M7	J2	$\overline{\text{FLASH.CS0}}$	O/Z	NA	NA		4 mA	A	1	DV_{DD5}
M8 L3	J1 J5	$\overline{\text{FLASH.BE[1:0]}}$	O/Z	NA	NA		4 mA	A	0	DV_{DD5}
L4	H1	$\overline{\text{FLASH.ADV}}$	O/Z	NA	NA		4 mA	A	1	DV_{DD5}
L7 K3 K4 L8 J1 J3 J4 J2 K7 H3 H4 K8 G2 G3 G4 F3 J7 E3 F4 D2 E4 C1 D3 J8	J3 J4 H6 H5 H2 H4 H3 G2 G1 G5 G3 G4 E1 F2 F4 F3 F5 D2 E4 E3 C2 C1 G6 B1	FLASH.A[24:1]	O/Z	NA	NA		4 mA	A, G1	0	DV_{DD5}
H7	C3	FLASH.RDY	I	NA	NA			B	input	DV_{DD5}
E5	N11	RSVD	NA	NA	NA				NA	NA

† I = Input, O = Output, Z = High-Impedance
‡ 'regx' denotes the terminal multiplexing register that controls the specified terminal where regx = FUNC_MUX_CTRL_x
§ PD20 = 20-µA internal pulldown, PD100 = 100-µA pulldown, PU20 = 20-µA internal pullup, PU100 = 100-µA internal pullup
¶ A = Standard LVCMOS input/output
B = Fail-safe LVCMOS input/output
C = USB transceiver input/output
D = I^2C input/output buffers
E = Fail-safe LVCMOS input and Standard LVCMOS output
F = analog oscillator terminals
G1 = Terminal may be gated by BFAIL
G2 = Terminal may be gated by GPIO9 and MPUIO3
G3 = Terminal may be gated by BFAIL and $\overline{\text{PWRON_RESET}}$
H1 = Terminal may be 3-stated by BFAIL input
J = Boundary-scannable terminal
# Z = High-Impedance, LZ = Low-Impedance (pin is driven), 1 = Output driven high, 0 = Output driven low
|| UART1 signals can be multiplexed to this pin via additional multiplexing in the USB module.

2.4 Signal Description

Table 2–4 provides a description of the signals on OMAP5910. Many signals are available on multiple pins depending upon the software configuration of the pin multiplexing options. Ball numbers which are italicized indicate the default pin muxings at reset. Ball numbers for busses are listed from MSB to LSB (left to right, top to bottom).

Table 2–4. Signal Description

SIGNAL	GZG BALL	GDY BALL	DESCRIPTION	TYPE†
EMIFF SDRAM Interface				
$\overline{\text{SDRAM.WE}}$	*C3*	*A1*	SDRAM write enable. $\overline{\text{SDRAM.WE}}$ is active (low) during writes, DCAB, and MRS commands to SDRAM memory.	O/Z
$\overline{\text{SDRAM.RAS}}$	*A2*	*C4*	SDRAM row address strobe. $\overline{\text{SDRAM.RAS}}$ is active (low) during ACTV, DCAB, REFR, and MRS commands to SDRAM memory.	O/Z
$\overline{\text{SDRAM.DQMU}}$	*D4*	*A2*	SDRAM upper data mask. Active-low data mask for the upper byte of the SDRAM data bus (SDRAM.D[15:8]). The data mask outputs allow for both 16-bit-wide and 8-bit-wide accesses to SDRAM memories.	O/Z
$\overline{\text{SDRAM.DQML}}$	*B3*	*B2*	SDRAM lower data mask. Active-low data mask for the lower byte of the SDRAM data bus (SDRAM.D[7:0]). The data mask outputs allow for both 16-bit-wide and 8-bit-wide accesses to SDRAM memories.	O/Z
SDRAM.D[15:0]	*D5, C4, B4, D6, C5, H8, C6, B6, D7, C7, D8, B8, G8, C8, G9, B9*	*D4, C5, G8, B4, B5, C6, A3, E6, D6, A4, B6, F7, C7, B7, D7, A6*	SDRAM data bus. SDRAM.D[15:0] provides data exchange between the Traffic Controller and SDRAM memory.	I/O/Z
SDRAM.CKE	*D9*	*D7*	SDRAM clock enable. Active-high output which enables the SDRAM clock during normal operation; SDRAM.CKE is driven inactive to put the memory into low-power mode.	O/Z
SDRAM.CLK	*C9*	*A7*	SDRAM clock. Clock for synchronization SDRAM memory commands/accesses. To minimize voltage undershoot and overshoot effects, it is recommended to place a series resistor (typically ~33 Ω) close to the SDRAM.CLK driver pin. SDRAM.CLK can also be configured as an input to monitor skew control.	I/O/Z
$\overline{\text{SDRAM.CAS}}$	*H9*	*F8*	SDRAM column address strobe. $\overline{\text{SDRAM.CAS}}$ is active (low) during reads, writes, and the REFR and MRS commands to SDRAM memory.	O/Z
SDRAM.BA[1:0]	*D10, C10*	*C9, B8*	SDRAM bank address bus. Provides the bank address to SDRAM memories.	O/Z

† I = Input, O = Output, Z = High-Impedance

‡ All core voltage supplies should be tied to the same voltage level (within 0.3 V). During system prototyping phases, it may be useful to maintain a capability for independent measurement of core supply currents to facilitate power optimization experiments.

§ See Sections 5.6.1 and 5.6.2 for special V_{SS} considerations with oscillator circuits.

Table 2–4. Signal Description (Continued)

SIGNAL	GZG BALL	GDY BALL	DESCRIPTION	TYPE†
EMIFF SDRAM Interface (Continued)				
SDRAM.A[12:0]	*G10, H10, C11, D11, G11, C12, D12, H11, C13, D13, G12, C14, B14*	*C8, B9, E9, A8, C10, F9, D9, A9, D10, C11, B10, A10, B11*	SDRAM address bus. Provides row and column address information to the SDRAM memory as well as MRS command data. SDRAM.A[10] also serves as a control signal to define specific commands to SDRAM memory.	O/Z
EMIFS FLASH and Asynchronous Memory Interface				
$\overline{\text{FLASH.WP}}$	*V4*	*R3*	EMIFS write protect. Active-low output for hardware write protection feature on standard memory devices.	O/Z
$\overline{\text{FLASH.WE}}$	*W2*	*P2*	EMIFS write enable. Active-low write enable output for Flash or SRAM memories or asynchronous devices.	O/Z
$\overline{\text{FLASH.RP}}$	*W1*	*T2*	EMIFS power down or reset output (Intel™ flash devices)	O/Z
$\overline{\text{FLASH.OE}}$	*U4*	*N3*	EMIFS output enable. Active-low output enable output for Flash or SRAM memories or asynchronous devices.	O/Z
FLASH.D[15:0]	*V3, T4, U3, U1, P8, T3, T2, R4, R3, R2, P7, P4, P2, N7, N2, N4*	*U2, T1, N2, R1, M3, P1, N1, N4, M5, M4, M2, M1, L6, L4, K3, L5*	EMIFS data bus. Bidirectional 16-bit data bus used to transfer read and write data during EMIFS accesses.	I/O/Z
FLASH.CLK	*N3*	*K4*	EMIFS clock. Clock output that is active during synchronous modes of EMIFS operation for synchronous burst Flash memories.	O/Z
$\overline{\text{FLASH.CS3}}$	*N8*	*L1*	EMIFS chip selects. Active-low chip-select outputs that become active when the appropriate address is decoded internal to the device. Each chip select decodes a 32M-byte region of memory space.	O/Z
$\overline{\text{FLASH.CS2}}$	*M4*	*K5*		
$\overline{\text{FLASH.CS1}}$	*M3*	*K1*		
$\overline{\text{FLASH.CS0}}$	*M7*	*J2*		
$\overline{\text{FLASH.BE[1:0]}}$	*M8, L3*	*J1, J5*	EMIFS byte enables. Active-low byte enable signals used to perform byte-wide accesses to memories or devices that support byte enables.	O/Z
$\overline{\text{FLASH.ADV}}$	*L4*	*H1*	EMIFS address valid. Active-low control signal used to indicate a valid address is present on the FLASH.A[24:1] bus.	O/Z
$\overline{\text{FLASH.BAA}}$	M4	*K5*	EMIFS burst advance acknowledge. Active-low control signal used with Advanced Micro Devices™ burst Flash. $\overline{\text{FLASH.BAA}}$ is multiplexed with $\overline{\text{FLASH.CS2}}$.	O/Z

† I = Input, O = Output, Z = High-Impedance

‡ All core voltage supplies should be tied to the same voltage level (within 0.3 V). During system prototyping phases, it may be useful to maintain a capability for independent measurement of core supply currents to facilitate power optimization experiments.

§ See Sections 5.6.1 and 5.6.2 for special V_{SS} considerations with oscillator circuits.

Intel is a registered trademark of Intel Corporation.
Advanced Micro Devices is a trademark of Advanced Micro Devices, Inc.

Table 2–4. Signal Description (Continued)

SIGNAL	GZG BALL	GDY BALL	DESCRIPTION	TYPE†
EMIFS FLASH and Asynchronous Memory Interface (Continued)				
FLASH.A[24:1]	*L7, K3, K4, L8, J1, J3, J4, J2, K7, H3, H4, K8, G2, G3, G4, F3, J7, E3, F4, D2, E4, C1, D3, J8*	*J3, J4, H6, H5, H2, H4, H3, G2, G1, G5, G3, G4, E1, F2, F4, F3, F5, D2, E4, E3, C2, C1, G6, B1*	EMIFS address bus. Address output bus for all EMIFS accesses. FLASH.A[24:1] provides the upper 24 bits of a 25-bit byte address. The byte enables must be used to implement 8-bit accesses.	O/Z
FLASH.RDY	*H7*	*C3*	EMIFS ready. Active-high ready input used to suspend the EMIFS interface when the external memory or asynchronous device is not ready to continue the current cycle. **It is recommended that this pin should be pulled high externally and unused. See the *OMAP5910 Dual-Core Processor Silicon Errata* (literature number SPRZ016) for more details.**	I
LCD Interface				
LCD.VS	*D14*	*D11*	LCD vertical sync output. LCD.VS is the frame clock which signals the start of a new frame of pixels to the LCD panel. In TFT mode, LCD.VS is the vertical synchronization signal.	O
LCD.HS	*H12*	*E11*	LCD horizontal sync. LCD.HS is the line clock which signals the end of a line of pixels to the LCD panel. In TFT mode, LCD.HS is the horizontal synchronization signal.	O
LCD.AC	*B15*	*A11*	LCD AC-bias. LCD.AC is used to signal the LCD to switch the polarity of the row and column power supplies to counteract charge buildup causing DC offset. In TFT mode, LCD.AC is used as the output enable to latch LCD pixel data using the pixel clock.	O
LCD.PCLK	*C15*	*A12*	LCD pixel clock output. Clock output provided to synchronize pixel data to the LCD panel. In passive mode, LCD.PCLK only transitions when LCD.P[15:0] is valid. In active mode, LCD.PCLK transitions continuously and LCD.AC is used as the output enable when LCD.P[15:0] is valid.	O

† I = Input, O = Output, Z = High-Impedance

‡ All core voltage supplies should be tied to the same voltage level (within 0.3 V). During system prototyping phases, it may be useful to maintain a capability for independent measurement of core supply currents to facilitate power optimization experiments.

§ See Sections 5.6.1 and 5.6.2 for special V_{SS} considerations with oscillator circuits.

Table 2–4. Signal Description (Continued)

SIGNAL	GZG BALL	GDY BALL	DESCRIPTION	TYPE†
LCD Interface (Continued)				
LCD.P[15:0]	*D15, C16, A17, G13, B17, C17, D16, D17, C18, B19, A20, H13, G14, C19, B21, D18*	*D12, C13, B12, F11, B13, E12, A13, C14, B14, A15, C15, B15, A16, D15, C16, B16*	LCD pixel data bus. Pixel data is transferred on this output bus to LCD panel.	O
Keyboard Matrix Interface				
KB.C[7:0]	V19, P15, *C20, C21, E18, D19, D20, F18*	M13, L12, *A17, D16, B17, E15, E16, C17*	Keyboard matrix column outputs. KB.Cx column outputs are used in conjunction with the KB.Rx row inputs to implement a 6x5 or 8x8 keyboard matrix.	O
KB.R[7:0]	M20, N21, N19, *E19, E20, H14, F19, G18*	K16, K17, K14, *D17, E17, F15, D14, D13*	Keyboard matrix row inputs. KB.Rx row inputs are used in conjunction with the KB.Cx column outputs to implement a 6x5 or 8x8 keyboard matrix.	I
Multichannel Buffered Serial Ports (McBSPs)				
MCBSP1.CLKS	*G20*	*F13*	McBSP1 clock source. Provides external clock reference for use with transmitter or reciever. CLKS is only present on McBSP1.	I
MCBSP1.CLKX	*G21*	*G15*	McBSP transmit clock. Serial shift clock reference for the transmitter. CLKX is present on all McBSPs. In the case of McBSP1 and McBSP3, the clock input to the McBSP receiver may also be provided on this terminal via an internal loop-back connection between the transmitter and receiver clocks.	I/O/Z
MCBSP2.CLKX	*Y6*	*U5*		
MCBSP3.CLKX	W16, N14	*P14,* R16		
MCBSP1.FSX	*H15,* H18	*F17,* F16	McBSP transmit frame sync. Frame synchronization for transmitter. FSX is present on all McBSPs. In the case of McBSP1 and McBSP3, the frame sync input to the McBSP receiver may also be provided on this terminal via an internal loop-back connection between the transmitter and receiver frame syncs.	I/O/Z
MCBSP2.FSX	*W7*	*T6*		
MCBSP3.FSX	N18, P18, P19, P20	L15, K12, K13, L14		

† I = Input, O = Output, Z = High-Impedance

‡ All core voltage supplies should be tied to the same voltage level (within 0.3 V). During system prototyping phases, it may be useful to maintain a capability for independent measurement of core supply currents to facilitate power optimization experiments.

§ See Sections 5.6.1 and 5.6.2 for special V_{SS} considerations with oscillator circuits.

Table 2–4. Signal Description (Continued)

SIGNAL	GZG BALL	GDY BALL	DESCRIPTION	TYPE†
Multichannel Buffered Serial Ports (McBSPs) (Continued)				
MCBSP1.DX	*H18,* H15	*F16,* F17	McBSP transmit data. Serial transmit data output. DX is present on all McBSPs.	O
MCBSP2.DX	*AA5,* P10	*R5,* R6		
MCBSP3.DX	P14, W21	U13, P16		
MCBSP2.CLKR	*V7*	*T5*	McBSP2 receive clock. Serial shift clock reference for the receiver. CLKR is only present on McBSP2.	I/O/Z
MCBSP2.FSR	*W6*	*P6*	McBSP2 receive frame sync. Frame synchronization for the receiver. FSR is only present on McBSP2.	I/O/Z
MCBSP1.DR	*H20*	*G16*	McBSP receive data. Serial receive data input. DR is present on all McBSPs.	I
MCBSP2.DR	*P10,* AA5	*R6, R5*		
MCBSP3.DR	AA17, U18	R12, P17		
Camera Interface				
CAM.EXCLK	*H19*	*G13*	Camera interface external clock. Output clock used to provide a timing reference to a camera sensor.	O
CAM.LCLK	*J15*	*H15*	Camera interface line clock. Input clock to provide external timing reference from camera sensor logic.	I
CAM.VS	*L18*	*J17*	Camera interface vertical sync. Vertical synchronization input from external camera sensor.	I
CAM.HS	*L15*	*K15*	Camera interface horizontal sync. Horizontal synchronization input from external camera sensor.	I
CAM.D[7:0]	*J18, J19, J14, K18, K19, K15, K14, L19*	*G14, G12, H16, J15, G17, H17, H14, J16*	Camera interface data. Data input bus to receive image data from an external camera sensor.	I
CAM.RSTZ	*M19*	*J14*	Camera interface reset. Reset output used to reset or Initialize external camera sensor logic.	O
ETM9 Trace Macro Interface				
ETM.CLK	J15	H15	ETM9 Trace Clock. Clock output for standard ETM9 test/debug equipment.	O
ETM.SYNC	H19	G13	ETM9 Trace Synchronization. Trace Sync output for standard ETM9 test/debug equipment.	O
ETM.D[7:0]	J18, J19, J14, K18, K19, K15, K14, L19	G14, G12, H16, J15, G17, H17, H14, J16	ETM9 Trace Packet data. Trace Packet outputs for standard ETM9 test/debug equipment.	O

† I = Input, O = Output, Z = High-Impedance

‡ All core voltage supplies should be tied to the same voltage level (within 0.3 V). During system prototyping phases, it may be useful to maintain a capability for independent measurement of core supply currents to facilitate power optimization experiments.

§ See Sections 5.6.1 and 5.6.2 for special V_{SS} considerations with oscillator circuits.

Table 2–4. Signal Description (Continued)

SIGNAL	GZG BALL	GDY BALL	DESCRIPTION	TYPE†
ETM9 Trace Macro Interface (Continued)				
ETM.PSTAT[2:0]	L18, L15, M19	J17, K15, J14	ETM9 Trace Pipe State 2–0. Pipeline status outputs for standard ETM9 test/debug equipment.	O
MICROWIRE Interface				
UWIRE.SCLK	*V19,* J15	*M13,* H15	MICROWIRE serial clock. This pin drives a clock to a MICROWIRE device. The active edge is software configurable.	O
UWIRE.SDO	*W21,* H19	*P16,* G13	MICROWIRE serial data out. Write data is transferred to a MICROWIRE device on this pin.	O
UWIRE.SDI	*U18,* J14	*P17,* H16	MICROWIRE serial data in. Read data is transferred from a MICROWIRE device on this pin.	I
$\overline{\text{UWIRE.CS0}}$	N14, J18	R16, G14	MICROWIRE chip select 0. The CS0 output selects a single MICROWIRE device (configurable as active high or active low).	O
$\overline{\text{UWIRE.CS3}}$	P15, J19	L12, G12	MICROWIRE chip select 3. The CS3 output selects a single MICROWIRE device (configurable as active high or active low).	O
HDQ/1-Wire Interface				
HDQ	N20	*L16*	HDQ/1-wire interface. HDQ optionally implements one of two serial protocols: HDQ or 1-Wire.	I/O
General-Purpose I/O (GPIO) and MPU I/O (MPUIO)				
GPIO15	*M20*	*K16*	Shared General-Purpose I/O. Each GPIO pin can be used by either the DSP core or the MPU core. Control of each GPIO pin between the two cores is selected by the MPU via control registers. Each GPIO pin may also be configured to cause an interrupt to its respective core processor. **GPIO5 and GPIO10 are not available on the OMAP5910 device.**	I/O/Z
GPIO14	*N21*	*K17*		
GPIO13	*N19*	*K14*		
GPIO12	*N18,* W6	*L15,* P6		
GPIO11	*N20,* V7	*L16,* T5		
GPIO9	*W8*	*M8*		
GPIO8	*Y8*	*U6*		
GPIO7	*M15,* Y5, V9	*L17,* N6, R7		
GPIO6	*P19*	*K13*		
GPIO4	*P20*	*L14*		
GPIO3	*P18*	*K12*		
GPIO2	*M14*	*M15*		
GPIO1	*R19*	*M17*		
GPIO0	*R18*	*M16*		

† I = Input, O = Output, Z = High-Impedance

‡ All core voltage supplies should be tied to the same voltage level (within 0.3 V). During system prototyping phases, it may be useful to maintain a capability for independent measurement of core supply currents to facilitate power optimization experiments.

§ See Sections 5.6.1 and 5.6.2 for special V_{SS} considerations with oscillator circuits.

Table 2–4. Signal Description (Continued)

SIGNAL	GZG BALL	GDY BALL	DESCRIPTION	TYPE†
General-Purpose I/O (GPIO) and MPU I/O (MPUIO) (Continued)				
MPUIO12	L19	*J16*	MPU General-Purpose I/O. MPUIO pins may only be used by the MPU core. **MPUIO8, MPUIO9, AND MPUIO10 are not available on the OMAP5910 device.**	I/O/Z
MPUIO11	W10	R8		
MPUIO7	V10	M9		
MPUIO6	W11	R9		
MPUIO5	*T20,* W5	*L13,* U4		
MPUIO4	*T19*	*N15*		
MPUIO3	*V8*	*P7*		
MPUIO2	*N15*	*N17*		
MPUIO1	*U19*	*M14*		
MPUIO0	Y12	N10		
Pulse-Width Tone and Pulse-Width Light Interface				
PWT	M18	J13	Pulse Width Tone output. The PWT output pin provides a modulated output for use with an external buzzer.	O
PWL	L14	H12	Pulse Width Light output. The PWL output pin provides a pseudo-random modulated voltage output used for LCD or keypad backlighting.	O
Multimedia Card/Secure Digital Interface (MMC/SD)				
MMC.CLK	*V11*	*U10*	MMC/SD clock. Clock output to the MMC/SD card.	O
MMC.CMD	*P11*	*U8*	MMC/SD command output. MMC/SD commands are transferred to/from this pin.	I/O/Z
MMC.DAT3	*W11*	*R9*	SD card data bit 3. Data bit 3 used in 4-bit Secure Digital mode.	I/O/Z
MMC.DAT2	*W10,* M15	*R8,* L17	SD card data bit 2. Data bit 2 used in 4-bit Secure Digital mode.	I/O/Z
MMC.DAT1	*V10*	*M9*	SD card data bit 1. Data bit 1 used in 4 -bit Secure Digital mode.	I/O/Z
MMC.DAT0	*R11*	*U9*	MMC/SD dat0 input. MMC.DAT0 functions as data bit 0 during MMC and Secure Digital operation. The pin functions as the data input in generic SPI mode.	I/O/Z

† I = Input, O = Output, Z = High-Impedance

‡ All core voltage supplies should be tied to the same voltage level (within 0.3 V). During system prototyping phases, it may be useful to maintain a capability for independent measurement of core supply currents to facilitate power optimization experiments.

§ See Sections 5.6.1 and 5.6.2 for special V_{SS} considerations with oscillator circuits.

Table 2–4. Signal Description (Continued)

SIGNAL	GZG BALL	GDY BALL	DESCRIPTION	TYPE†
Universal Asynchronous Receiver/Transmitter Interfaces				
UART1.TX	Y14	P13	UART transmit. Transmit data output. TX is present on all UARTs. On UART3, the TX pin implements the TXIR function during SIR mode operation.	O
UART2.TX	V6, M18	R4, J13		
UART3.TX	M18, K18	J13, J15		
UART1.RX	*V14*	*R11*	UART receive. Receive data input. RX is present on all UARTs. On UART3, the RX pin implements the RXIR function during SIR mode operation.	I
UART2.RX	*R9,* L14	*M7,* H12		
UART3.RX	L14, K19	H12, G17		
UART1.CTS	*R14*	*M10*	UART clear-to-send. CTS is present on all UARTs.	I
UART2.CTS	*Y5,* L15	*N6,* K15		
UART3.CTS	R13, K15	L10, H17		
UART1.RTS	AA15	U12	UART request-to-send. RTS is present on all UARTs. On UART3 in IrDA mode, this pin is SD_MODE.	O
UART2.RTS	W5, M19	U4, J14		
UART3.RTS	Y13, R19, K14	P11, M17, H14		
UART1.DTR	W21, Y13	P16, P11	UART data-terminal-ready. DTR is only present on UART1 and UART3.	O
UART3.DTR	W21	P16		
UART1.DSR	U18, R13	P17, L10	UART data-set-ready. DSR is only present on UART1 and UART3.	I
UART3.DSR	U18	P17		
UART2.BCLK	*Y4*	*T4*	UART baud clock output. A clock of 16x of the UART2 baud rate is driven onto this pin. This feature is only implemented on UART2.	O
Inter-Integrated Circuit Master and Slave Interface				
I2C.SCL	*T18*	*P15*	I^2C serial clock. I2C.SCL provides the timing reference for I^2C transfers.	I/O/Z
I2C.SDA	*V20*	*N14*	I^2C serial data. I2C.SDA provides control and data for I^2C transfers.	I/O/Z
LED Pulse Generator Interface				
LED1	P18	K12	LED Pulse Generator output 1. LED1 produces a static or pulsing output used to drive an external LED indicator.	O
LED2	T19	N15	LED Pulse Generator output 2. LED2 produces a static or pulsing output used to drive an external LED indicator.	O
Multichannel Serial Interfaces (MCSIs)				
MCSI1.CLK	*AA13*	*U11*	MCSI clock. Multichannel Serial Interface clock reference. The clock can be driven in master mode or an external clock may be driven on this signal in slave mode.	I/O/Z
MCSI2.CLK	*Y10*	*T8*		
MCSI1.SYNC	*V13*	*T11*	MCSI sync. Multichannel Serial Interface frame synchronization signal. The frame sync can be driven in master mode or an external clock may be driven on this signal in slave mode. MCSIx.SYNC may be configured as an active-low or active-high sync.	I/O/Z
MCSI2.SYNC	*V9*	*R7*		

† I = Input, O = Output, Z = High-Impedance

‡ All core voltage supplies should be tied to the same voltage level (within 0.3 V). During system prototyping phases, it may be useful to maintain a capability for independent measurement of core supply currents to facilitate power optimization experiments.

§ See Sections 5.6.1 and 5.6.2 for special V_{SS} considerations with oscillator circuits.

Table 2–4. Signal Description (Continued)

SIGNAL	GZG BALL	GDY BALL	DESCRIPTION	TYPE†
Multichannel Serial Interfaces (MCSIs) (Continued)				
MCSI1.DIN	*W13*	*R10*	MCSI data in. Multichannel Serial Interface data input pin.	I
MCSI2.DIN	*AA9*	*P8*		
MCSI1.DOUT	*W14*	*N12*	MCSI data out. Multichannel Serial Interface data output pin.	O
MCSI2.DOUT	*W9*	*T7*		
USB (Integrated Transceiver Interface, can be used with Host or Function)				
USB.DP	*P9*	*P5*	USB internal transceiver D+. The positive side of the integrated USB transceiver's differential bus. A series resistor of 27 Ω (5% tolerance) is required on the USB.DP pin.	I/O/Z
USB.DM	*R8*	*P4*	USB internal transceiver D−. The negative side of the integrated USB transceiver's differential bus. A series resistor of 27 Ω (5% tolerance) is required on the USB.DM pin.	I/O/Z
USB Pin Group 1 and 2 (Utilizing External Transceivers, can be used with Host or Function)				
USB1.TXEN	W16	P14	USB transmit enable. Driven active (low) when the USB host or Function peripheral is driving data onto the USB bus via the TXD output.	O
USB2.TXEN	W9	T7		
USB1.TXD	W14	N12	USB transmit data. Single-ended logic output used to transmit data to the transmit input of an external USB transceiver. USBx.TXD may also be used for transceiverless connection between OMAP5910 and another transceiverless USB device.	O
USB2.TXD	V6	R4		
USB1.VP	V13	T11	USB vplus data. Single-ended input used to monitor the logical state of the D+ line of the USB bus. USBx.VP should be driven by an external USB transceiver based on the state of D+.	I
USB2.VP	AA9	P8		
USB1.VM	AA13	U11	USB vminus data. Single-ended input used to monitor the logical state of the D− line of the USB bus. USBx.VM should be driven by an external USB transceiver based on the state of D−.	I
USB2.VM	R9	M7		
USB1.RCV	W13	R10	USB receive data. Single-ended logic input used to receive data from the receive output of an external USB transceiver. USBx.RCV may also be used for transceiverless connection between OMAP5910 and another transceiverless USB device.	I
USB2.RCV	Y5	N6		
USB1.SUSP	AA17	R12	USB bus segment suspend control. Active-high output indicates detection of IDLE condition on the USB bus for greater than 5 ms. USBx.SUSP is implemented on both USB ports 1 and 2.	O
USB2.SUSP	Y10	T8		
USB1.SE0	P14	U13	USB single-ended zero. Active-high output indicates detection of the single-ended zero state on the USB bus. USBx.SE0 is implemented for both USB ports 1 and 2.	O
USB2.SE0	W5	U4		
USB1.SPEED	Y12	N10	USB 1 bus segment speed control. Static control output used by the external transceiver to determine whether USB port 1 is operating in full-speed or low-speed mode. USB1.SPEED is only implemented on USB port 1.	O

† I = Input, O = Output, Z = High-Impedance

‡ All core voltage supplies should be tied to the same voltage level (within 0.3 V). During system prototyping phases, it may be useful to maintain a capability for independent measurement of core supply currents to facilitate power optimization experiments.

§ See Sections 5.6.1 and 5.6.2 for special V_{SS} considerations with oscillator circuits.

Table 2–4. Signal Description (Continued)

SIGNAL	GZG BALL	GDY BALL	DESCRIPTION	TYPE†
USB Miscellaneous Signals				
USB.CLKO	W4	T3	USB clock output. 6-MHz divided clock output of the internal USB DPLL provided for reference. Common for all USB host and Function peripherals.	O
USB.PUEN	*W4*	*T3*	USB pullup enable. Control output used in conjunction with an external pullup resistor to implement USB device connect and disconnect via software. USB.PUEN is used with the USB Function peripheral.	O
USB.VBUS	R18	M16	USB voltage bus enable. USB.VBUS is used to provide a logic-high voltage level which may be used to enable pullup resistors on the USB bus to indicate connection or disconnection status of the OMAP5910 device as a USB Function device.	I
JTAG/Emulation Interface				
TCK	*W18*	*T14*	IEEE Standard 1149.1 test clock. TCK is normally a free-running clock signal with a 50% duty cycle. The changes on the test access port (TAP) of input signals TDI and TMS are clocked into the TAP controller, instruction register, or selected test data register on the rising edge of TCK. Changes at the TAP output signal TDO occur on the falling edge of TCK.	I
TDI	*Y19*	*U17*	IEEE Standard 1149.1 test data input. TDI is clocked into the selected register (instruction or data) on the rising edge of TCK.	I
TDO	*AA19*	*U16*	IEEE Standard 1149.1 test data output. The contents of the selected register (instruction or data) are shifted out of TDO on the falling edge of TCK. TDO is in the high-impedance state except when the scanning of data is in progress.	O
TMS	*V17*	*R13*	IEEE Standard 1149.1 test mode select. This serial control input is clocked into the TAP controller on the rising edge of TCK.	I
$\overline{\text{TRST}}$	*Y18*	*U15*	IEEE Standard 1149.1 test reset. $\overline{\text{TRST}}$, when high, gives the IEEE standard 1149.1 scan system control of the operations of the device. If $\overline{\text{TRST}}$ is not connected, or driven low, the device operates in its functional mode, and the IEEE standard 1149.1 signals are ignored.	I
EMU0	*V16*	*R17*	Emulation pin 0. When $\overline{\text{TRST}}$ is driven high, EMU0 is used as an interrupt to or from the emulator system and is defined as input/output by way of the IEEE standard 1149.1 scan system.	I/O
EMU1	*W17*	*T13*	Emulation pin 1. When $\overline{\text{TRST}}$ is driven high, EMU1 is used as an interrupt to or from the emulator system and is defined as input/output by way of the IEEE standard 1149.1 scan system.	I/O
Device Clock Pins				
CLK32K_IN	P13	N9	32-kHz clock input. Digital CMOS 32-kHz clock input driven by an external 32-kHz oscillator if the internal 32-kHz oscillator is not used.	I
CLK32K_OUT	Y12	N10	32-kHz clock output. Clock output reflecting the internal 32-kHz clock.	O
CLK32K_CTRL	AA20	T15	32-kHz clock selection control input. CLK32K_CTRL selects whether or not the internal 32-kHz oscillator is used or if the 32-kHz clock is to be provided externally via the CLK32K_IN input. If CLK32K_CTRL is high, the 32-kHz internal oscillator is used; if CLK32K_CTRL is low, the CMOS input CLK32K_IN is used as a 32-kHz clock source.	I
OSC32K_IN	*W12*	*T10*	32-kHz crystal XI connection. Analog clock input to 32-kHz oscillator for use with external crystal.	analog
OSC32K_OUT	*R12*	*T9*	32-kHz crystal XO connection. Analog output from 32-kHz oscillator for use with external crystal.	analog
OSC1_IN	*Y2*	*R2*	Base crystal XI connection. Analog input to base oscillator for use with external crystal or to be driven by external 12- or 13-MHz oscillator.	analog

† I = Input, O = Output, Z = High-Impedance

‡ All core voltage supplies should be tied to the same voltage level (within 0.3 V). During system prototyping phases, it may be useful to maintain a capability for independent measurement of core supply currents to facilitate power optimization experiments.

§ See Sections 5.6.1 and 5.6.2 for special V_{SS} considerations with oscillator circuits.

Table 2–4. Signal Description (Continued)

SIGNAL	GZG BALL	GDY BALL	DESCRIPTION	TYPE†
Device Clock Pins (Continued)				
OSC1_OUT	*W3*	*P3*	Base crystal XO connection. Analog output from base oscillator for use with external 12- or 13-MHz crystal.	analog
MCLK	*Y9*	*U7*	M-Clock. General-purpose clock output which may be configured to run at 12 MHz or 48 MHz. MCLK may be configured to drive constantly or only when the MCLKREQ signal is asserted active high.	O
BCLK	*Y13*	*P11*	B-Clock. General purpose clock output which may be configured to run at 12 MHz. BCLK may be configured to drive constantly or only when the BCLKREQ signal is asserted active high.	O
MCLKREQ	*R10*	*N8*	M-Clock Request. Active high request input which allows an external device to request that MCLK be driven.	I
BCLKREQ	*R13*	*L10*	B-Clock Request. Active high request input which allows an external device to request that BCLK be driven.	I
Reset Logic Pins				
$\overline{\text{PWRON_RESET}}$	*G19*	*F14*	Reset input to device. Active-low asynchronous reset input resets the entire OMAP5910 device.	I
$\overline{\text{MPU_RST}}$	*V15*	*P12*	MPU reset input. Active-low asynchronous reset input resets the MPU core.	I
$\overline{\text{RST_OUT}}$	*W15*	*M11*	Reset output. Active-low output is asserted when MPUST is active (after synchronization.)	O
Interrupts and Miscellaneous Control and Configuration Pins				
MPU_BOOT	*AA17*	*R12*	MPU boot mode. When MPU_BOOT is low, the MPU boots from chip select 0 of the EMIFS (Flash) interface. When MPU_BOOT is high, the MPU boots from chip select 3 of EMIFS.	I
DMA_REQ_OBS	L14	H12	DMA request external observation output.	O
IRQ_OBS	M18	J13	IRQ external observation output.	O
$\overline{\text{EXT_DMA_REQ1}}$	T19	N15	External DMA requests. $\overline{\text{EXT_DMA_REQ0}}$ and $\overline{\text{EXT_DMA_REQ1}}$ provide two DMA request inputs which external devices may use to trigger System DMA transfers. The System DMA must be configured in software to respond to these external requests.	I
$\overline{\text{EXT_DMA_REQ0}}$	N15	N17		
BFAIL/$\overline{\text{EXT_FIQ}}$	*W19*	*R14*	Battery power failure and external FIQ interrupt input. BFAIL/$\overline{\text{EXT_FIQ}}$ may be used to gate certain input pins when battery power is low or failing. The pins which may be gated are configured via software. This pin can also optionally be used as an external FIQ interrupt source to the MPU. The function of this pin is configurable via software.	I
EXT_MASTER_REQ	R10	N8	External master request. If the 12-MHz clock is provided by an external device instead of using the on-chip oscillator, a high level on this output indicates to the external device that the clock must be driven. A low level indicates that the OMAP5910 device is in sleep mode and the 12-MHz clock is not necessary.	O
LOW_PWR	T20	L13	Low-power request output. This active-high output indicates that the OMAP5910 device is in a low-power sleep mode. During reset and functional modes, LOW_PWR is driven low. This signal can be used to indicate a low-power state to external power management devices in a system or it can be used as a chip select to external SDRAM memory to minimize current consumption while the SDRAM is in self-refresh and the OMAP5910 device is in sleep mode.	O
CONF	*V18*	*T16*	Configuration input. CONF selects reserved factory test modes. CONF should always be pulled low during device operation.	I

† I = Input, O = Output, Z = High-Impedance

‡ All core voltage supplies should be tied to the same voltage level (within 0.3 V). During system prototyping phases, it may be useful to maintain a capability for independent measurement of core supply currents to facilitate power optimization experiments.

§ See Sections 5.6.1 and 5.6.2 for special V_{SS} considerations with oscillator circuits.

Table 2–4. Signal Description (Continued)

SIGNAL	GZG BALL	GDY BALL	DESCRIPTION	TYPE†
Interrupts and Miscellaneous Control and Configuration Pins (Continued)				
STAT_VAL/$\overline{\text{WKUP}}$	*Y17*	*U14*	Static Valid / Chip wake-up input. STAT_VAL/$\overline{\text{WKUP}}$ is also sampled at reset to select the MMC/SD port. If the MMC/$\overline{\text{SD}}$ peripheral is to be used, this pin must be pulled high during reset. It is recommended that this pin be pulled high during reset regardless of whether or not MMC/SD will be used.	I
RST_HOST_OUT	*P14*	*U13*	Reset Host output. A software controllable Reset or Shutdown output to an external device.	O
RSVD	*E5*	*N11*	Reserved pin. This pin must be left unconnected.	–
Power Supplies				
V_{SS}§	*A11, A13, A21, B1, B2, B5, B7, B16, B18, E2, F20, G1, J20, K2, K20, N1, R21, U2, U20, V5, V12, W20, Y3, Y15, AA1, AA7, AA21*	*G9, H9, N5, H8, G11, M6, L11, K8, J12, J9, G7, E5, J7, J8, J6, J10, K10, H10, F12, L7, F6, L9, K9, M12, E13, J11, N13*	Ground. Common ground return for all core and I/O voltage supplies.	power
CV_{DD}‡	*A9, F2, P12, Y20*	*E8, E2, T17, P10*	Core supply voltage. Supplies power to OMAP5910 core logic and low-voltage sections of I/O.	power
CV_{DD1}‡	*A3*	*B3*	Core Supply Voltage 1. Supplies power to the on-chip shared SRAM memory (192k-Bytes).	power
CV_{DD2}‡	*Y1, AA3*	*K7, L8*	Core Supply Voltage 2. Supplies power to the MPU subsystem logic and memory.	power
CV_{DD3}‡	*B13, B20, J21, R20*	*F10, G10, H11, K11*	Core Supply Voltage 3. Supplies power to the DSP subsystem logic and memory.	power
CV_{DD4}‡	*M2*	*K2*	Core Supply Voltage 4. Supplies power to the DPLL which provides internal clocks to the core and peripherals (excluding USB peripherals). **NOTE:** The voltage to this supply pin should be kept as clean as possible to maximize performance.	power

† I = Input, O = Output, Z = High-Impedance

‡ All core voltage supplies should be tied to the same voltage level (within 0.3 V). During system prototyping phases, it may be useful to maintain a capability for independent measurement of core supply currents to facilitate power optimization experiments.

§ See Sections 5.6.1 and 5.6.2 for special V_{SS} considerations with oscillator circuits.

Table 2–4. Signal Description (Continued)

SIGNAL	GZG BALL	GDY BALL	DESCRIPTION	TYPE†
Power Supplies (Continued)				
CV_{DDA}‡	*Y21*	*R15*	Analog supply voltage. Supplies power to ULPD DPLL which provides an internal clock to the USB peripherals. **NOTE:** The voltage to this supply pin should be kept as clean as possible to maximize performance.	power
DV_{DD1}	*A15, A19, E21, L21, U21, AA11, Y16*	*C12, A14, E14, H13, N16, P9, T12*	I/O Supply Voltage 1. Supplies power to the majority of peripheral I/O buffers. DV_{DD1} may be connected in common with the other DV_{DD} supplies if the same operating voltage is desired.	power
DV_{DD2}	*AA2*	*U3*	I/O Supply Voltage 2. Supplies power to the internal USB transceiver buffers. DV_{DD2} may optionally be used for USB connect and disconnect detection by connecting DV_{DD2} to the power from the USB bus in the system. DV_{DD2} may be connected in common with the other DV_{DD} supplies if the same operating voltage is desired.	power
DV_{DD3}	*Y7*	*N7*	I/O Supply Voltage 3. Supplies power to the MCSI2 and McBSP2 peripheral I/O buffers as well as GPIO[9:8] I/O buffers. The DV_{DD3} supply may operate within a high-voltage or low-voltage range (see Section 5.2 for operating conditions). DV_{DD3} may be connected in common with the other DV_{DD} supplies if the same operating voltage is desired.	power
DV_{DD4}	*A1, A5, A7, B10, B12*	*D3, D5, A5, D8, E10*	I/O Supply Voltage 4. Supplies power to the SDRAM interface I/O buffers. The DV_{DD4} supply may operate within a high-voltage or low-voltage range (see Section 5.2 for operating conditions). DV_{DD4} may be connected in common with the other DV_{DD} supplies if the same operating voltage is desired.	power
DV_{DD5}	*C2, E1, H2, L1, P3, R1, V2*	*H7, D1, F1, K6, L2, L3, U1*	I/O Supply Voltage 5. Supplies power to the FLASH interface I/O buffers. The DV_{DD5} supply may operate within a high-voltage or low-voltage range (see Section 5.2 for operating conditions). DV_{DD5} may be connected in common with the other DV_{DD} supplies if the same operating voltage is desired.	power

† I = Input, O = Output, Z = High-Impedance

‡ All core voltage supplies should be tied to the same voltage level (within 0.3 V). During system prototyping phases, it may be useful to maintain a capability for independent measurement of core supply currents to facilitate power optimization experiments.

§ See Sections 5.6.1 and 5.6.2 for special V_{SS} considerations with oscillator circuits.

3 Functional Overview

The following functional overview is based on the block diagram in Figure 3–1.

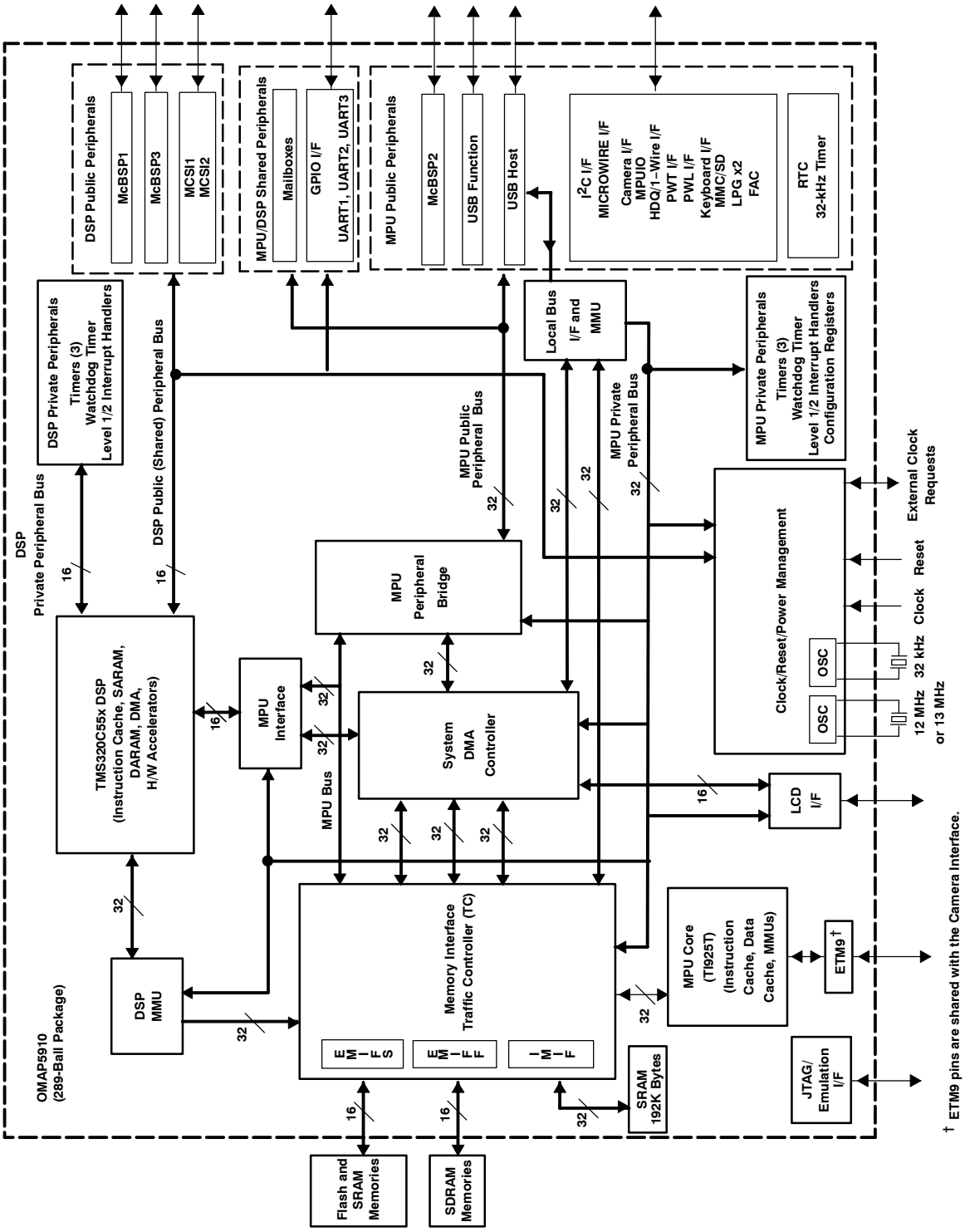

Figure 3–1. OMAP5910 Functional Block Diagram

3.1 Functional Block Diagram Features

The OMAP5910 device includes the following functional blocks:

- ARM9TDMI-based MPU core
  - 16K-byte instruction cache and 8K-byte data cache
  - Memory Management Units (MMUs) for Instruction and Data
  - Two 64-entry Translation Look-Aside Buffers (TLBs) for MMUs
  - 17-word write buffer
- C55x DSP subsystem
  - 48K-word single-access RAM (SARAM) (96K bytes)
  - 32K-word dual-access RAM (DARAM) (64K bytes)
  - 16K-word ROM (32K bytes)
  - 24K-byte instruction cache
  - Six-channel DMA controller
  - Hardware Accelerators for DCT, iDCT, pixel interpolation, and motion estimation
- Nine-channel system DMA controller
- Traffic controller providing shared access to three memory interfaces:
  - EMIFF External Memory Interface providing 16-bit interface to 64M bytes of standard SDRAM
  - EMIFS External Memory Interface providing 16-bit interface to 128M bytes of Flash, ROM, or asynchronous memories
  - Internal Memory Interface (IMIF) providing 32-bit interface to 192K bytes of internal SRAM
- DSP Memory Management Unit (MMU) configured by the MPU
- MPU Interface (MPUI) allowing MPU and System DMA to access DSP subsystem memory and DSP public peripherals
- Local Bus Interface (with MMU) allowing USB host peripheral direct access to system memories.
- DSP Private Peripherals (accessible only by the DSP)
  - Three 32-bit general-purpose timers
  - Watchdog timer
  - Level 1/Level 2 interrupt handlers
- DSP Public Peripherals (accessible by the DSP, DSP DMA, and the MPU via the MPU interface)
  - Two Multichannel Buffered Serial Ports (McBSPs)
  - Two Multichannel Serial Interfaces (MCSIs) ideal for voice data
- MPU Private Peripherals (accessible only by the MPU)
  - Three 32-bit general-purpose timers
  - Watchdog Timer
  - Level 1/Level 2 interrupt handlers
  - Configuration Registers for pin-multiplexing and other device-level configurations
  - LCD controller supporting monochrome panels (STN) and color panels (STN or TFT)

- MPU Public Peripherals (accessible by the MPU and the System DMA)
  - Multichannel Buffered Serial Port (McBSP)
  - USB Function interface (optional internal transceiver shared with USB Host interface)
  - USB Host interface with up to three ports (optional internal transceiver shared with USB Function interface)
  - One integrated USB transceiver for either host or Function
  - Inter-Integrated Circuit (I^2C) Multi-mode master and slave interface
  - MICROWIRE serial interface
  - Camera interface providing connectivity to CMOS image sensors
  - Up to ten MPU general-purpose I/Os (MPUIOs)
  - 32-kHz timer for use with MPU OS
  - Pulse-Width Tone (PWT) module for tone generation
  - Pulse-Width Light (PWL) module for LCD backlight control
  - Keyboard interface (6 x 5 or 8 x 8 matrix)
  - Multimedia Card or Secure Digital interface (MMC/SD)
  - Two LED Pulse Generator modules (LPG)
  - Real-Time Clock module (RTC)
  - HDQ or 1-Wire Master interface for serial communication to battery management devices
  - Frame Adjustment Counter (FAC)
- MPU/DSP Shared Peripherals (Controlling processor is selected by the MPU)
  - Four Mailboxes for interprocessor communications
  - Up to 14 General-Purpose I/O pins with interrupt capability to either processor
  - Three UARTs (UART3 has SIR mode for IrDA functionality)
- Clock/Reset/Power Management modules
  - Configurable Digital Phase-Locked Loop (DPLL) providing clocks to MPU, DSP, and TC
  - Dedicated DPLL with a 12 MHz input clock, or dedicated APLL with a 13 MHz input clock providing clocking to USB peripherals
  - Integrated base (12- or 13-MHz) and 32-kHz oscillators utilizing external crystals
  - Reset, clocking and idle/sleep controls for power management
- JTAG and ETM9 interfaces for emulation and debug

3.2 MPU Memory Maps

3.2.1 MPU Global Memory Map

The MPU has a unified address space. Therefore, the internal and external memories for program and data as well as peripheral registers and configuration registers are all accessed within the same address space. The MPU space is always addressed using byte addressing. Table 3–1 provides a high level illustration of the entire MPU addressable space. Further detail regarding the peripheral and configuration registers is provided in Sections 3.2.2, 3.15, and 3.17.

Table 3–1. OMAP5910 MPU Global Memory Map

BYTE ADDRESS RANGE	ON-CHIP	EXTERNAL INTERFACE
0x0000 0000 – 0x01FF FFFF		EMIFS (Flash CS0) 32M bytes
0x0200 0000 – 0x03FF FFFF	Reserved	
0x0400 0000 – 0x05FF FFFF		EMIFS (Flash CS1) 32M bytes
0x0600 0000 – 0x07FF FFFF	Reserved	
0x0800 0000 – 0x09FF FFFF		EMIFS (Flash CS2) 32M bytes
0x0A00 0000 – 0x0BFF FFFF	Reserved	
0x0C00 0000 – 0x0DFF FFFF		EMIFS (Flash CS3) 32M bytes
0x0E00 0000 – 0x0FFF FFFF	Reserved	
0x1000 0000 – 0x13FF FFFF		EMIFF (SDRAM) 64M bytes
0x1400 0000 – 0x1FFF FFFF	Reserved	
0x2000 0000 – 0x2002 FFFF	IMIF Internal SRAM 192K bytes	
0x2003 0000 – 0x2FFF FFFF	Reserved	
0x3000 0000 – 0x5FFF FFFF	Local Bus space for USB Host	
0x6000 0000 – 0xDFFF FFFF	Reserved	
0xE000 0000 – 0xE0FF FFFF	DSP public memory space (accessible via MPUI) 16M bytes	
0xE100 0000 – 0xEFFF FFFF	DSP public peripherals (accessible via MPUI)	
0xF000 0000 – 0xFFFA FFFF	Reserved	
0xFFFB 0000 – 0xFFFB FFFF	MPU public peripherals†	
0xFFFC 0000 – 0xFFFC FFFF	MPU/DSP shared peripherals	
0xFFFD 0000 – 0xFFFE FFFF	MPU private peripherals	
0xFFFF 0000 – 0xFFFF FFFF	Reserved	

† Some peripherals within this memory region are actually shared peripherals (UART 1,2,3).

3.2.2 MPU Subsystem Registers Memory Map

The MPU accesses peripheral and configuration registers in the same way that internal and external memory is accessed. The following tables specify the MPU base addresses where each set of registers is accessed. All accesses to these registers must utilize the appropriate access width (8-, 16-, or 32-bit-wide accesses) as indicated in the tables. Accessing registers with the incorrect access width cause unexpected results including a TI Peripheral Bus (TIPB) bus error and associated TIPB interrupt.

Refer to Sections 3.15, 3.16, and 3.17 for more detail about each of these register sets including individual register addresses, register names, descriptions, supported access types (read, write or read/write) and reset values.

Table 3–2. MPU Private Peripheral Registers

MPU BASE ADDRESS	REGISTER SET	ACCESS WIDTH
0xFFFE 0000	MPU Level 2 Interrupt Handler Registers	32
0xFFFE C000	LCD Controller Registers	32
0xFFFE C500	MPU Timer1 Registers	32
0xFFFE C600	MPU Timer2 Registers	32
0xFFFE C700	MPU Timer3 Registers	32
0xFFFE C800	MPU Watchdog Timer Registers	32
0xFFFE CB00	MPU Level 1 Interrupt Handler Registers	32
0xFFFE D800	System DMA Controller Registers	16

Table 3–3. MPU Public Peripheral Registers

MPU BASE ADDRESS	REGISTER SET	ACCESS WIDTH
0xFFFB 1000	McBSP2 Registers	16
0xFFFB 3000	MICROWIRE Registers	16
0xFFFB 3800	I^2C Registers	16
0xFFFB 4000	USB Function Registers	16
0xFFFB 4800	RTC Registers	8
0xFFFB 5000	MPUIO/Keyboard Registers	16
0xFFFB 5800	Pulse Width Light (PWL) Registers	8
0xFFFB 6000	Pulse Width Tone (PWT) Registers	8
0xFFFB 6800	Camera Interface Registers	32
0xFFFB 7800	MMC/SD Registers	16
0xFFFB 9000	Timer 32k Registers	32
0xFFFB A000	USB Host Registers	32
0xFFFB A800	Frame Adjustment Counter (FAC) Registers	16
0xFFFB C000	HDQ/1-Wire Registers	8
0xFFFB D000	LED Pulse Generator 1 (LPG1) Registers	8
0xFFFB D800	LED Pulse Generator 2 (LPG2) Registers	8

Table 3–4. MPU/DSP Shared Peripheral Registers

MPU BASE ADDRESS	REGISTER SET	ACCESS WIDTH
0xFFFB 0000	UART1 Registers	8
0xFFFB 0800	UART2 Registers	8
0xFFFB 9800	UART3 Registers	8
0xFFFC E000	GPIO Interface Registers	16
0xFFFC F000	Mailbox Registers	16

Table 3–5. DSP Public Peripheral Registers (Accessible via MPUI Port)

MPU BASE ADDRESS	REGISTER SET	ACCESS WIDTH
0xE101 1800	McBSP1 Registers	16
0xE101 2000	MCSI2 Registers	16
0xE101 2800	MCSI1 Registers	16
0xE101 7000	McBSP3 Registers	16

Table 3–6. MPU Configuration Registers

MPU BASE ADDRESS	REGISTER SET	ACCESS WIDTH
0xFFFB C800	MPU UART TIPB Bus Switch Registers	16
0xFFFE 0800	Ultra Low-Power Device (ULPD) Registers	16
0xFFFE 1000	OMAP5910 Configuration Registers	32
0xFFFE 1800	Device Die Identification Registers	32
0xFFFE C100	Local Bus Control Registers	32
0xFFFE C200	Local Bus MMU Registers	32
0xFFFE C900	MPU Interface (MPUI) Registers	32
0xFFFE CA00	TIPB (Private) Bridge 1 Configuration Registers	32
0xFFFE CC00	Traffic Controller Registers	32
0xFFFE CE00	MPU Clock/Reset/Power Control Registers	32
0xFFFE CF00	DPLL1 Configuration Registers	32
0xFFFE D200	DSP MMU Registers	32
0xFFFE D300	TIPB (Public) Bridge 2 Configuration Registers	16
0xFFFE D400	JTAG Identification Registers	32

3.3 DSP Memory Maps

The DSP supports a unified program/data memory map (program and data accesses are made to the same physical space), however peripheral registers are located in a separate I/O space which is accessed via the DSP's port instructions.

3.3.1 DSP Global Memory Map

The DSP Subsystem contains 160K bytes of on-chip SRAM (64K bytes of DARAM and 96K bytes of SARAM). The MPU also has access to these memories via the MPUI (MPU Interface) port. The DSP also has access to the shared system SRAM (192K bytes) and both EMIF spaces (EMIFF and EMIFS) via the DSP Memory Management Unit (MMU) which is configured by the MPU.

Table 3–7 shows the high-level program/data memory map for the DSP subsystem. DSP data accesses utilize 16-bit word addresses while DSP program fetches utilize byte addressing.

Table 3–7. DSP Global Memory Map

BYTE ADDRESS RANGE	WORD ADDRESS RANGE	INTERNAL MEMORY	EXTERNAL MEMORY†
0x00 0000 – 0x00 FFFF	0x00 0000 – 0x00 7FFF	DARAM 64K bytes	
0x01 0000 – 0x02 7FFF	0x00 8000 – 0x01 3FFF	SARAM 96K bytes	
0x02 8000 – 0x04 FFFF	0x01 4000 – 0x02 7FFF	Reserved	
0x05 0000 – 0xFF 7FFF	0x02 8000 – 0x7F BFFF		Managed by DSP MMU
0xFF 8000 – 0xFF FFFF	0x7F C000 – 0x7F FFFF	PDROM (MPNMC = 0)	Managed by DSP MMU (MPNMC =1)

† This space could be external memory or internal shared system memory depending on the DSP MMU configuration.

3.3.2 On-Chip Dual-Access RAM (DARAM)

The DARAM is located in the byte address range 000000h−00FFFFh and is composed of eight blocks of 8K bytes each (see Table 3−8). Each DARAM block can perform two accesses per cycle (two reads, two writes, or a read and a write).

Table 3−8. DARAM Blocks

BYTE ADDRESS RANGE	WORD ADDRESS RANGE	MEMORY BLOCK
0x00 0000 − 0x00 1FFF	0x00 0000 − 0x00 0FFF	DARAM 0
0x00 2000 − 0x00 3FFF	0x00 1000 − 0x001FFF	DARAM 1
0x00 4000 − 0x00 5FFF	0x00 2000 − 0x00 2FFF	DARAM 2
0x00 6000 − 0x00 7FFF	0x00 3000 − 0x00 3FFF	DARAM 3
0x00 8000 − 0x00 9FFF	0x00 4000 − 0x00 4FFF	DARAM 4
0x00 A000 − 0x00 BFFF	0x00 5000 − 0x00 5FFF	DARAM 5
0x00 C000 − 0x00 DFFF	0x00 6000 − 0x00 6FFF	DARAM 6
0x00 E000 − 0x00 FFFF	0x00 7000 − 0x00 7FFF	DARAM 7

3.3.3 On-Chip Single-Access RAM (SARAM)

The SARAM is located at the byte address range 010000h−03FFFFh and is composed of 12 blocks of 8K bytes each (see Table 3−9). Each SARAM block can perform one access per cycle (one read or one write).

Table 3−9. SARAM Blocks

BYTE ADDRESS RANGE	WORD ADDRESS RANGE	MEMORY BLOCK
0x01 0000 − 0x01 1FFF	0x00 8000 − 0x00 8FFF	SARAM 0
0x01 2000 − 0x01 3FFF	0x00 9000 − 0x00 9FFF	SARAM 1
0x01 4000 − 0x01 5FFF	0x00 A000 − 0x00 AFFF	SARAM 2
0x01 6000 − 0x01 7FFF	0x00 B000 − 0x00 BFFF	SARAM 3
0x01 8000 − 0x01 9FFF	0x00 C000 − 0x00 CFFF	SARAM 4
0x01 A000 − 0x01 BFFF	0x00 D000 − 0x00 DFFF	SARAM 5
0x01 C000 − 0x01 DFFF	0x00 E000 − 0x00 EFFF	SARAM 6
0x01 E000 − 0x01 FFFF	0x00 F000 − 0x00 FFFF	SARAM 7
0x02 0000 − 0x02 1FFF	0x01 0000 − 0x01 0FFF	SARAM 8
0x02 2000 − 0x02 3FFF	0x01 1000 − 0x01 1FFF	SARAM 9
0x02 4000 − 0x02 5FFF	0x01 2000 − 0x01 2FFF	SARAM 10
0x02 6000 − 0x02 7FFF	0x01 3000 − 0x01 3FFF	SARAM 11

3.3.4 DSP I/O Space Memory Map

The DSP I/O space is a separate address space from the data/program memory space. The I/O space is accessed via the DSP's port instructions. The Public and Shared peripheral registers are also accessible by the MPU through the MPUI (MPU Interface) port. The DSP I/O space is accessed using 16-bit word addresses. The following tables specify the DSP base addresses where each set of registers is accessed. All accesses to these registers must utilize the appropriate access width as indicated in the tables. Accessing registers with the incorrect access width may cause unexpected results including a TI Peripheral Bus (TIPB) bus error and associated TIPB interrupt.

Refer to Sections 3.16 and 3.17 for more detail about each of these register sets including individual register addresses, register names, descriptions, supported access types (read, write or read/write) and reset values.

Table 3–10. DSP Private Peripheral Registers

DSP BASE ADDRESS	REGISTER SET	ACCESS WIDTH
0x00 0C00	DSP DMA Controller Registers	16
0x00 2800	DSP Timer1 Registers	16
0x00 2C00	DSP Timer2 Registers	16
0x00 3000	DSP Timer3 Registers	16
0x00 3400	DSP Watchdog Timer Registers	16
0x00 3800	DSP Interrupt Interface Registers	16
0x00 4800	Level2 Interrupt Handler Registers	16

Table 3–11. DSP Public Peripheral Registers

DSP BASE ADDRESS	REGISTER SET	ACCESS WIDTH
0x00 8C00	McBSP1 Registers	16
0x00 9000	MCSI2 Registers	16
0x00 9400	MCSI1 Registers	16
0x00 B800	McBSP3 Registers	16

Table 3–12. DSP/MPU Shared Peripheral Registers

DSP BASE ADDRESS	REGISTER SET	ACCESS WIDTH
0x00 8000	UART1 Registers	8
0x00 8400	UART2 Registers	8
0x00 CC00	UART3 Registers	8
0x00 F000	GPIO Interface Registers	16
0x00 F800	Mailbox Registers	16

Table 3–13. DSP Configuration Registers

DSP BASE ADDRESS	REGISTER SET	ACCESS WIDTH
0x00 0000	DSP TIPB Bridge Configuration Registers	16
0x00 0800	DSP EMIF Configuration Registers	16
0x00 1400	DSP I-Cache Registers	16
0x00 4000	DSP Clock Mode Registers	16
0x00 E400	DSP UART TIPB Bus Switch Registers	16

3.4 DSP External Memory (Managed by MMU)

When the DSP MMU is off, the 24 address lines are directly copied to the traffic controller without any modification. There is no virtual-to-physical address translation. All the addresses between 0x05 0000 and 0x00FF F800 (0x00FF FFFF if DSP bit MP/$\overline{MC}$ = 1) are redirected to the first sector of flash (CS0) in the shared memory space (shared by MPU and DSP).

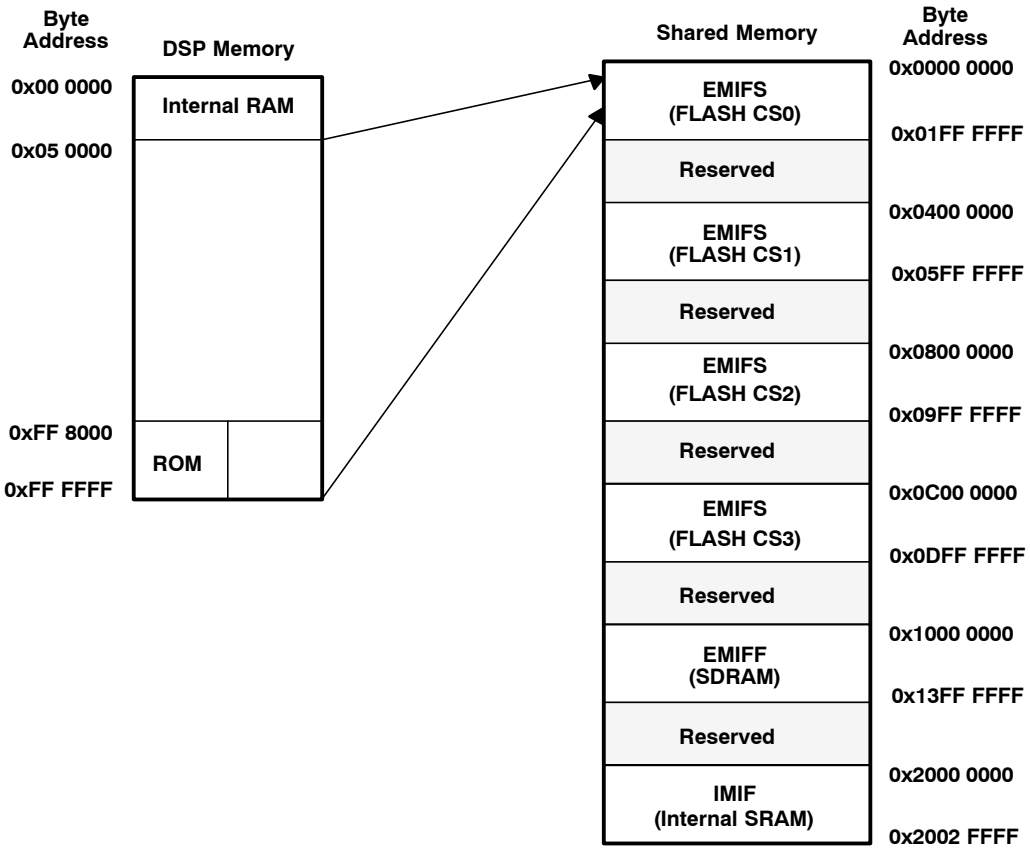

Figure 3–2. DSP MMU Off

When the DSP MMU is on, the 24 address lines (virtual address) are relocated within a physical 32-bit address by the DSP MMU. The DSP MMU is controlled by the MPU.

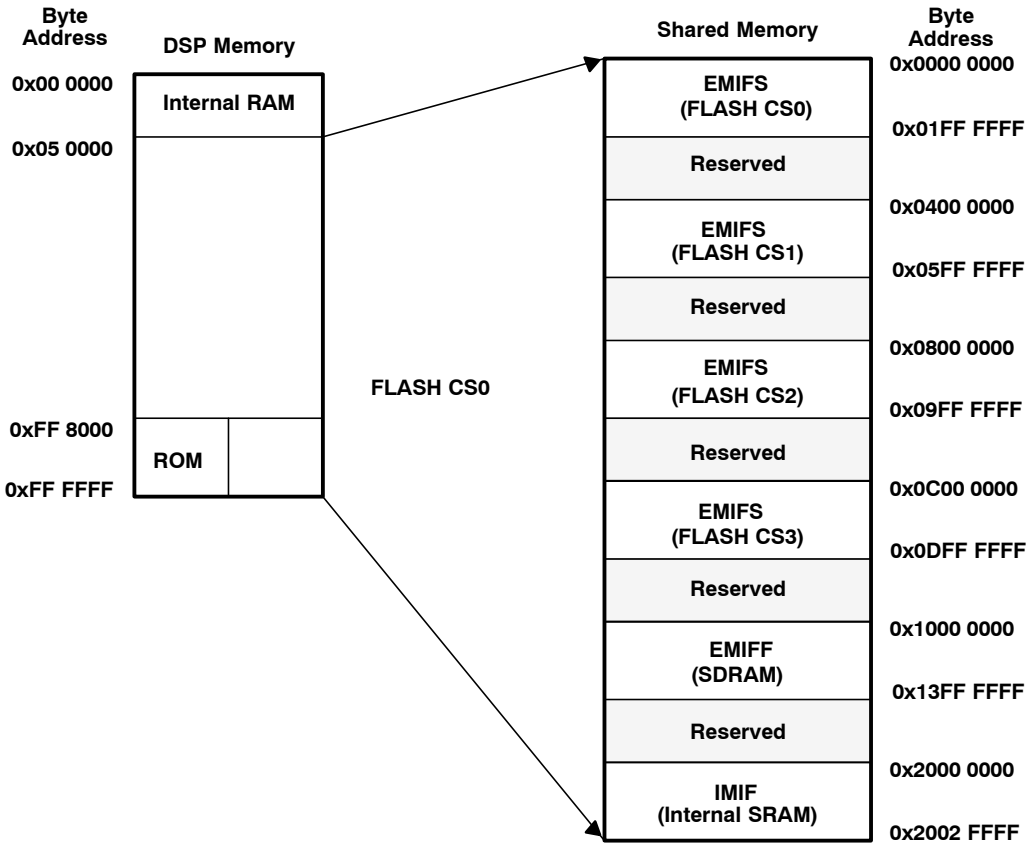

Figure 3–3. DSP MMU On

3.5 MPU and DSP Private Peripherals

The MPU and DSP each have their own separate private peripheral bus. Peripherals on each of these private buses may only be accessed by their respective processors. For instance, the DSP timers on the DSP private peripheral bus are not accessible by the MPU or the System DMA controller.

3.5.1 Timers

The MPU and DSP each have their own three 32-bit timers available on their respective private TI Peripheral Bus (TIPB). These timers are used by the operating systems to provide general-purpose housekeeping functions, or in the case of the DSP, to also provide synchronization of real-time processing functions. These timers may be configured either in auto-reload or one-shot mode with on-the-fly read capability. The timers generate an interrupt to the respective processor (MPU or DSP) when the timer's down-counter is equal to zero.

3.5.2 32k Timer (MPU only)

The MPU has one 32k Timer that runs on the 32-kHz clock as opposed to the MPU subsystem domain clock.

The MPU subsystem operating system (OS) requires interrupts at regular time intervals for OS scheduling purpose (typically 1 ms to 30 ms). These time intervals can be generated using the MPU's three 32-bit general-purpose timers. However, these timers cannot be used in sleep modes when the system clock is not operating. Therefore, a 32-kHz clock-based timer is needed to provide the required OS timing interval.

3.5.3 Watchdog Timer

The MPU and DSP each have a single Watchdog Timer. Each watchdog timer can be configured as either a watchdog timer or a general-purpose timer.

A watchdog timer requires that the MPU or DSP software or OS periodically write to the appropriate WDT count register before the counter underflows. If the counter underflows, the WDT generates a reset to the appropriate processor (MPU or DSP). The DSP WDT resets only the DSP processor while the MPU WDT resets both processors (MPU and DSP). The watchdog timers are useful for detecting user programs that are stuck in an infinite loop, resulting in loss of program control or in a runaway condition.

When used as a general-purpose timer, the WDT is a 16-bit timer configurable either in autoreload or one-shot mode with on-the-fly read capability. The timer generates an interrupt to the respective processor (MPU or DSP) when the timer's down-counter is equal to zero.

3.5.4 Interrupt Handlers

The MPU and DSP each have two levels of interrupt handling, allowing up to 39 interrupts to the DSP and 63 interrupts to the MPU.

3.5.5 LCD Controller

The OMAP5910 device includes an LCD Controller that interfaces with most industry-standard LCDs. The LCD Controller is configured by the MPU and utilizes a dedicated channel on the System DMA to transfer data from the frame buffer. The frame buffer can be implemented using the internal shared SRAM (192K bytes) or optionally using external SDRAM via the EMIFF. Using the frame buffer as its data source, the System DMA must provide data to the FIFO at the front end of the LCD controller data path at a rate sufficient to support the chosen display mode and resolution. Optimal performance is achieved when using the internal SRAM as the frame buffer.

The panel size is programmable, and can be any width (line length) from 16 to 1024 pixels in 16-pixel increments. The number of lines is set by programming the total number of pixels in the LCD. The total frame size is programmable up to 1024 x 1024. However, frame sizes and frame rates supported in specific applications will depend upon the available memory bandwidth allowed by the specific application as well as the maximum configurable pixel clock rate.

The screen is intended to be mapped to the frame buffer as one contiguous block where each horizontal line of pixels is mapped to a set of consecutive bytes of words in the frame memory.

The principle features of the LCD controller are:

- Dedicated 64-entry x 16-bit FIFO
- Dedicated LCD DMA channel for LCD
- Programmable display including support for 2-, 4-, 8-, 12-, and 16-bit graphics modes
- Programmable display resolutions up to 1024 pixels by 1024 lines (assuming sufficient system bandwidth)
- Support for passive monochrome (STN) displays
- Support for passive color (STN) displays
- Support for active color (TFT) displays
- Patented dithering algorithm, providing:
  - 15 grayscale levels for monochrome passive displays
  - 3375 colors for color passive displays
  - 65536 colors for active color displays
  - 256-entry x 12-bit palette
- Programmable pixel rate
- Pixel clock plus horizontal and vertical synchronization signals
- ac-bias drive signal
- Active display enable signal
- 256-entry x 12-bit palette
- Dual-frame buffers

3.6 MPU Public Peripherals

Peripherals on the MPU Public Peripheral bus may only be accessed by the MPU and the System DMA Controller, which is configured by the MPU. This bus is called a public bus because it is accessible by the System DMA controller. The DSP cannot access peripherals on this bus.

3.6.1 USB Host Controller

The OMAP5910 USB host controller communicates with USB devices at the USB low-speed (1.5M-bit/s maximum) and full-speed (12M-bit/s maximum) data rates. The controller is USB compliant. For additional information, see the *Universal Serial Bus Specification, Revision 2.0* and the *OpenHCI – Open Host Controller Interface Specification for USB, Release 1.0a*, hereafter called the OHCI Specification for USB.

The OMAP5910 USB host controller implements the register set and makes use of the memory data structures which are defined in the OHCI Specification for USB. These registers and data structures are the mechanism by which a USB host controller driver software package may control the OMAP5910 USB host controller.

The USB host controller is connected to the MPU public peripheral bus for MPU access to registers. The USB host controller gains access to the data structures in system memory via the internal Local Bus interface. The OMAP5910 device implements a variety of signal multiplexing options that allows use of the USB host controller with any of the three available USB interfaces on the device. One of these interfaces utilizes an integrated USB transceiver, while the other two require external transceivers. The host controller can support up to three downstream ports.

The OMAP5910 USB host controller implementation does not implement every aspect of the functionality defined in the OHCI Specification for USB. The differences focus on power switching, overcurrent reporting, and the OHCI ownership change interrupt. Other restrictions are imposed by OMAP5910 system memory addressing mechanisms and the effects of the OMAP5910 pin-multiplexing options.

3.6.2 USB Function Peripheral

The USB Function peripheral provides a full-speed Function interface between the MPU and the USB wire. The module handles USB transactions with minimal MPU intervention and is fully compliant to USB standard.

The USB Function module supports one control endpoint (EP0), up to 15 IN endpoints, and up to 15 OUT endpoints. The exact endpoint configuration is software-programmable. The specific items of a configuration for each endpoint are: the size in bytes, the direction (IN, OUT), the type (bulk/interrupt or isochronous), and the associated endpoint number. The USB Function module also supports the use of three System DMA channels for IN endpoints and three System DMA channels for OUT endpoints for either bulk/interrupt or isochronous transactions.

The OMAP5910 device implements a variety of signal-multiplexing options that allow use of the USB Function peripheral with any one of the three available USB interfaces on the device. One of these interfaces utilizes an integrated USB transceiver, while the other two require external transceivers. The USB Function can only utilize one of these ports at a time. The other ports may be used simultaneously by the USB Host controller peripheral.

3.6.3 Multichannel Buffered Serial Port (McBSP)

The Multichannel Buffered Serial Port (McBSP) provides a high-speed, full-duplex serial port that allow direct interface to audio codecs, and various other system devices. The MPU public peripheral bus has access to one McBSP, which is McBSP2.

The McBSP provides:

- Full-duplex communication
- Double-buffer data registers, which allow a continuous data stream
- Independent framing and clocking for receive and transmit

In addition, the McBSP has the following capabilities:

- Direct interface to:
  - T1/E1 framers
  - MVIP switching-compatible and ST-BUS compliant devices
  - IOM-2 compliant device
  - AC97-compliant device
  - I2S-compliant device
  - Serial peripheral interface (SPI)
- Multichannel transmit and receive of up to 128 channels
- A wide selection of data sizes, including: 8, 12, 16, 20, 24, or 32 bits
- μ-law and A-law companding
- Programmable polarity for both frame synchronization and data clocks
- Programmable internal clock and frame generation

  NOTE: All of the standard McBSP pins are not necessarily available on every McBSP on the OMAP5910 device.

In the case of the MPU's McBSP2, the following pins are available:

- CLKX and CLKR (transmit and receive clocks)
- FSX and FSR (transmit and receive frame syncs)
- DX and RX (transmit and receive data)

The functional clock to the McBSP2 peripheral is configurable to the DPLL clock rate with a divider of 1, 2, 4, or 8.

McBSP2 does not have a CLKS external clock reference pin. Therefore, if the McBSP2 Sample Rate Generator (SRG) is used, the only reference clock available to the Sample Rate Generator is a programmable clock from the MPU domain.

3.6.4 I²C Master/Slave Interface

The I²C Master/Slave Interface is compliant to Philips *I²C-Bus Specification Version 2.1* master bus. The I²C controller supports the multimaster mode, which allows more than one device capable of controlling the bus to be connected to it. Including the OMAP5910 device, each I²C device is recognized by a unique address and can operate as either transmitter or receiver, depending on the function of the device. In addition to being a transmitter or receiver, a device connected to the I²C bus™ can also be considered as master or slave when performing data transfers.

The I²C Interface supports the following features:

- Compliant to Philips *I²C-Bus Specification Version 2.1*
- Support standard mode (up to 100K bits/s) and Fast mode (up to 400K bits/s)
- 7-bit and 10-bit device addressing modes
- General call
- Start/Restart/Stop
- Multimaster transmitter/slave receiver mode
- Multimaster receiver/slave transmitter mode
- Combined master transmit/receive and receive/transmit mode
- Built-in FIFO for buffered read or write
- Module enable/disable capability
- Programmable clock generation
- Supports use of two DMA channels

The I²C Interface does not support the following features:

- High-speed (HS) mode for transfer rates up to 3.4M bits
- C-bus compatibility mode

3.6.5 MICROWIRE Serial Interface

The MICROWIRE interface is a serial synchronous interface that can drive up to four serial external components. The interface is compatible with the MICROWIRE standard and is seen as the master.

MICROWIRE is typically used to transmit control and status information to external peripheral devices or to transmit data to or from small nonvolatile memories such as serial EEPROMs or serial Flash devices.

3.6.6 Multimedia Card/Secure Digital (MMC/SD) Interface

The MMC/SD Interface controller provides an interface to MMC or SD memory cards. The controller handles MMC/SD transactions with minimal MPU intervention, allowing optional use of two system DMA channels for transfer of data.

The following combination of external devices is supported:

- One or more MMC memory cards sharing the same bus.
- One single SD memory card.

  NOTE: Other combinations such as two SD cards or one MMC card with one SD card are not supported.

The MPU software must manage transaction semantics, while the MMC/SD controller deals with MMC/SD protocol at the transmission level: packing data, adding the CRC, generating the start/end bit and checking for syntactical correctness. SD mode wide bus width is also supported.

I²C Bus is a trademark of Philips Electronics N.V.

3.6.7 HDQ/1-Wire Interface

This module allows implementation of both HDQ and the 1-Wire protocols. These protocols use a single wire to communicate between a master and a slave. The HDQ/1-Wire pin is open-drain and requires an external pullup resistor.

HDQ and 1-Wire interfaces can be found on commercially available battery management and power management devices. The interface can be used to send command and status information between OMAP5910 and such a battery or power management device.

3.6.8 Camera Interface

The camera interface is an 8-bit external port which may be used to accept data from an external camera sensor. The interface handles multiple image formats synchronized on vertical and horizontal synchronization signals. Data transfer to the camera interface may be done synchronously or asynchronously.

The camera interface module converts the 8-bit data transfers into 32-bit words and utilizes a 128-word buffer to facilitate efficient data transfer to memory. Data may be transferred from the camera interface buffer to internal memory by the system DMA controller or directly by the MPU. The interface may utilize an externally driven clock at rates up to 13 MHz or may optionally provide an output reference clock at rates of 8 MHz, 9.6 MHz, or 24 MHz when the camera interface is configured for clocking from the internal 48 MHz. When the camera interface is configured to obtain clocking from the base oscillator frequency (12 MHz or 13 MHz), the camera interface clock is configurable to operate at the base frequency or one half the base frequency (6 MHz or 6.5 MHz).

3.6.9 MPUIO/Keyboard Interface

The MPUIO pins may be used as either general-purpose I/O for the MPU or as a Keyboard Interface to a 6 x 5 or 8 x 8 keypad array. If a 6 x 5 keypad array is implemented, the unused MPUIO pins may be used as GPIO. When used as GPIO, each pin may be configured individually as either an output or an input, and they may be individually configured to generate MPU interrupts based on a level change (falling or rising) after a debouncing process. These MPUIO interrupts may be used to wake up the device from deep-sleep mode using the 32-kHz clock.

The MPUIO pins may also be used as a keyboard interface. The keyboard interface provides the following pins:

- KB.R[7:0] input pins for row lines
- KB.C[7:0] output pins for column lines

To allow key-press detection, all input pins (KB.Rx) are pulled up to DV_{DD} and all output pins (KB.Cx) are driven low level. The KB.R[7:0] and KB.C[7:0] pins should be connected to an external keyboard matrix such that when a key on the matrix is pressed, the corresponding row and column lines are shorted together. Any action on a key generates an interrupt to the MPU, which then scans the column lines in a particular sequence to determine which key or keys have been pressed.

3.6.10 Pulse-Width Light (PWL)

The Pulse-Width Light (PWL) module provides control of the LCD or keypad backlighting by employing a random sequence generator. This voltage-level control technique decreases the spectral power at the modulator harmonic frequencies. The module uses a switchable 32-kHz clock.

3.6.11 Pulse-Width Tone (PWT)

The Pulse-Width Tone (PWT) module generates a modulated frequency signal for use with an external buzzer. The frequency is programmable between 349 Hz and 5276 Hz with 12 half-tone frequencies per octave. The volume level of the output is also programmable.

3.6.12 LED Pulse Generator

There are two separate LED Pulse Generator (LPG) modules. Each LPG module provides an output for an indication LED. The blinking period is programmable between 152 ms and 4 s or the LED can be switched on or off permanently.

3.6.13 Real-Time Clock

The Real-Time Clock (RTC) module provides an embedded RTC for use in applications which need to track real time. This peripheral is not an ultra-low-power module—meaning that the RTC module cannot be powered independently without powering the OMAP5910 MPU core. Therefore, if an ultra-low-power RTC is desired for a system application, an external RTC should be used.

The RTC module has the following features:

- Time information (seconds/minutes/hours) directly in BCD code
- Calendar information (day/month/year/day of the week) directly in BCD code up to year 2099
- Interrupts generation, periodically (1s/1m/1h/1d period) or at a precise time of the day (alarm function)
- 30-s time correction
- Oscillator frequency calibration

3.6.14 Frame Adjustment Counter

The frame adjustment counter (FAC) is a simple peripheral that counts the number of rising edges of one signal (start of frame interrupt of the USB Function) during a programmable number of rising edges of a second signal (transmit frame synchronization of McBSP2). The FAC may only be used with these specific USB Function and McBSP2 signals. The count value can be used by system-level software to adjust the duration of the two time domains with respect to each other to reduce overflow and underflow. If the data being transferred is audio data, this module can be part of a solution that reduces pops and clicks. The FAC module generates one second-level interrupt to the MPU.

3.7 DSP Public Peripherals

Peripherals on the DSP Public Peripheral bus are directly accessible by the DSP and DSP DMA. These peripherals may also be accessed by the MPU and System DMA Controller via the MPUI interface. The MPUI interface must be properly configured to allow this access.

3.7.1 Multichannel Buffered Serial Port (McBSP)

The Multichannel Buffered Serial Port (McBSP) provides a high-speed, full-duplex serial port that allow direct interface to audio codecs and various other system devices. Refer to Section 3.6.3 for a list of features provided by the McBSP. The DSP public peripheral bus has access to two McBSPs: McBSP1 and McBSP3.

NOTE: All of the standard McBSP pins are not necessarily available on every McBSP on the OMAP5910 device. In the case of the two DSP McBSPs, the following pins are available:

- McBSP1 pins:
  - CLKX (transmit clock)
  - FSX (transmit frame sync)
  - DX and DR (transmit and receive data)
  - CLKS (external reference to Sample Rate Generator)
- McBSP3 pins:
  - CLKX (transmit clock)
  - FSX (transmit frame sync)
  - DX and DR (transmit and receive data)

Because McBSP1 and McBSP3 do not have the CLKR and FSR pins available, the transmit clock and frame sync pins (CLKX and FSX) must be used for bit clock and frame synchronization on both the transmit and receive channels of these McBSPs.

The functional clock to McBSP1 and McBSP3 is fixed at the OMAP5910 base operating frequency (12 MHz or 13 MHz). The bit-clock rate for these McBSPs is therefore limited to 6 or 6.5 MHz (one half the base frequency).

Only McBSP1 has the CLKS pin available. If the sample rate generator (SRG) is used on McBSP1, the reference clock to the SRG can be configured to be either an external reference provided on the CLKS pin, or the internal base (12- or 13-MHz) device clock. However, if the SRG is used on McBSP3, the only reference clock available to this SRG is the base device clock as clock reference.

3.7.2 Multichannel Serial Interface (MCSI)

The multichannel serial interface (MCSI) provides flexible serial interface with multichannel transmission capability. The MCSI allows the DSP to access a variety of external devices, such as audio codecs and other types of analog converters. The DSP public peripheral bus has access to two MCSIs: MCSI1 and MCSI2. These MCSIs provide full-duplex transmission and master or slave clock control. All transmission parameters are configurable to cover the maximum number of operating conditions. The MCSIs have the following features:

- Master or slave clock control (transmission clock and frame synchronization pulse)
- Programmable transmission clock frequency (master mode) up to one half the OMAP5910 base frequency (12 or 13 MHz)
- Reception clock frequency (slave mode) of up to the base frequency (12 or 13 MHz)
- Single-channel or multichannel (x16) frame structure
- Programmable word length: 3 to 16 bits
- Full-duplex transmission
- Programmable frame configuration
- Continuous or burst transmission
- Normal or alternate framing
- Normal or inverted frame and clock polarities
- Short or long frame pulse
- Programmable oversize frame length
- Programmable frame length
- Programmable interrupt occurrence time (TX and RX)
- Error detection with interrupt generation on wrong frame length
- System DMA support for both TX and RX data transfers

3.8 Shared Peripherals

The shared peripherals are connected to both the MPU Public Peripheral bus and the DSP Public Peripheral bus. In the case of the UARTs, these connections are achieved via a TI Peripheral Bus Switch, which must be configured to allow MPU or DSP access to the UARTs. The other shared peripherals have permanent connections to both public peripheral buses, although read and write accesses to each peripheral register may differ.

3.8.1 Universal Asynchronous Receiver/Transmitter (UART)

The OMAP5910 device has three Universal Asynchronous Receiver/Transmitter (UART) peripherals which are accessible on the DSP public and MPU public peripheral buses. A TI peripheral bus switch configured by the MPU allows either TIPB access to these UART peripherals. All three UARTs are standard 16C750-compatible UARTs implementing an asynchronous transfer protocol with various flow control options. Two of the three UARTs (UART1 and UART2) have autobaud capability to automatically determine and adjust to the baud rate of the external connected device. One of the UARTs (UART3) can function as a general UART or can optionally function as an IrDA interface.

The main features of the UART peripherals include:

- Selectable UART/autobaud modes (autobauding on UART1 and UART2) with autobauding between 1200 bits/s and 115.2K bits/s
- Dual 64-entry FIFOs for received and transmitted data payload
- Programmable and selectable transmit and receive FIFO trigger levels for DMA and interrupt generation
- Programmable sleep mode
- Complete status-reporting capabilities in both normal and sleep mode
- Frequency prescaler values from 0 to 65535 to generate the appropriate baud rates
- Interrupt request generated if multiple System DMA requests
- Baud rate from 300 bits/s up to 1.5M bits/s
- Software/hardware flow control
- Programmable XON/XOFF characters
- Programmable auto-RTS and auto-CTS
- Programmable serial interface characteristics
  - 5-, 6-, 7-, or 8-bit characters
  - Even-, odd-, or no-parity bit generation and detection
  - 1, 1.5, or 2 stop-bit generation
  - False start bit detection
  - Line break generation and detection
  - Fully prioritized interrupt system controls
  - Internal test and loopback capabilities
  - Modem control functions (CTS, RTS, DSR, DTR)

NOTE: DSR and DTR are only available on UART1 and UART3.

The IrDA functions available on UART3 are as follows:

- Slow infrared (SIR) operations
- Framing error, cyclic redundancy check (CRC) error, abort pattern (SIR) detection
- 8-entry status FIFO (with selectable trigger levels) available to monitor frame length and frame errors

3.8.2 General-Purpose I/O (GPIO)

There are up to 14 shared GPIO pins on the OMAP5910 device which may be accessed and controlled by either the DSP public peripheral bus or the MPU public peripheral bus. Each GPIO pin is independently configurable to be used by either the DSP or MPU. The MPU controls which processor owns each GPIO pin by configuring a pin control register that only the MPU can access.

Each GPIO pin can be used as either an input or output pin with GPIO inputs being synchronized internally to a peripheral clock. GPIO inputs may also optionally be configured to generate an interrupt condition to the processor which owns the GPIO pin. The sense of the interrupt condition is configurable such that either a high-to-low or low-to-high transition causes the interrupt condition.

Some of the GPIO pins are multiplexed with other interface pins specific to other device peripherals. Refer to Table 2–3 to decide which GPIO pins are multiplexed with other peripheral signals.

3.8.3 Mailbox Registers

Four sets of shared mailbox registers are available for communication between the DSP and MPU. These registers are discussed further in Section 3.12, Interprocessor Communication.

3.9 System DMA Controller

The System Direct Memory Access (DMA) controller transfers data between points in the memory space without intervention by the MPU. The System DMA allows movements of data to and from internal memory, external memory, and peripherals to occur in the background of MPU operation. It is designed to off-load the block data transfer function from the MPU processor. The System DMA is configured by the MPU via the MPU private peripheral bus.

The System DMA controller has nine independent general-purpose channels and seven ports that it may transfer to/from. An additional tenth channel is dedicated for use with the LCD controller. Of the seven available ports, the DMA transfers may occur between any two ports with the exception of the LCD port, which may only be used as a destination with the EMIFF or IMIF as the source. For maximum transfer efficiency, all nine channels are independent. This means that if multiple channels are exclusively accessing different ports, then simultaneous transfers performed by the channels will occur uninhibited. If the multiple channels are accessing common ports, however, some arbitration cycles will be necessary. Arbitration occurs in a round-robin fashion with configurable priority for each channel (high or low).

The basic functional features of the system DMA controller are as follows:

- Nine general-purpose and one dedicated (LCD) DMA channels
- Round-robin arbitration scheme with programmable priorities
- Concurrent DMA transfer capability
- Start of transfer on peripheral request or host request
- Byte-alignment and Byte-packing/unpacking capability
- Burst transfer capability (IMIF, EMIFF, EMIFS, LCD, and Local ports)
- Time-out counter for each DMA channel to prevent a channel locking on a memory location or peripheral.
- Constant, post-incrementing, and Single- or Double-Indexed addressing modes
- Autoinitialization for multiple block transfers without MPU intervention
- Access available to all of the memory range (physical memory mapping and TIPB space)
- Seven ports are available for different kinds of hardware resources.
  - EMIFS port (allowing access to external asynchronous memory or devices)
  - EMIFF port (allowing access to external SDRAM)
  - IMIF port (allowing access to 192K bytes of shared SRAM)
  - MPUI port (allowing access to DSP memory and peripherals)
  - TIPB port (allowing peripheral register access)
  - Local port (used for Host USB only)
  - LCD port (allowing transfers to the LCD controller)
- Memory-to-memory transfer granularity of 8, 16, and 32 bits.

3.10 DSP DMA Controller

The DSP subsystem has its own dedicated DMA Controller, which is entirely independent of the MPU or the System DMA Controller. The DSP DMA Controller has many of the same major features that the System DMA Controller possesses (see Section 3.9).

The DSP DMA Controller has six generic channels and five physical ports available for source or destination data. These five ports are the SARAM port, DARAM port, EMIF (External memory port), DSP TIPB port, and MPUI port. The DSP may configure the DSP DMA Controller to transfer data between the SARAM, DARAM, EMIF, and TIPB ports, but the MPUI port is a dedicated port used for MPU or System DMA initiated transfers to DSP subsystem resources. The SARAM and DARAM ports are used to access local DSP memories and the TIPB port is used to access the registers of the DSP peripherals. The EMIF port of the DSP DMA controller is used to access the Traffic Controller via the DSP MMU (Memory Management Unit).

3.11 Traffic Controller (Memory Interfaces)

The Traffic Controller (TC) manages all accesses by the MPU, DSP, System DMA, and Local Bus to the OMAP5910 system memory resources. The TC provides access to three different memory interfaces: External Memory Interface Slow (EMIFS), External Memory Interface Fast (EMIFF), and Internal Memory Interface (IMIF). The IMIF allows access to the 192K bytes of on-chip SRAM.

The EMIFS interface provides 16-bit-wide access to asynchronous or synchronous memories or devices such as Intel StraFlashTM memory (28FxxxJ3A, Static Byte Enable) and Asynchronous SRAMs.

The EMIFF Interface provides access to 16-bit-wide access to standard SDRAM memories and the IMIF provides access to the 192K bytes of on-chip SRAM.

The TC provides the functions of arbitrating contending accesses to the same memory interface from different initiators (MPU, DSP, System DMA, Local Bus), synchronization of accesses due to the initiators and the memory interfaces running at different clock rates, and the buffering of data allowing burst access for more efficient multiplexing of transfers from multiple initiators to the memory interfaces.

The TC's architecture allows simultaneous transfers between initiators and different memory interfaces without penalty. For instance, if the MPU is accessing the EMIFF at the same time, the DSP is accessing the IMIF, transfers may occur simultaneously since there is no contention for resources. There are three separate ports to the TC from the System DMA (one for each of the memory interfaces), allowing for greater bandwidth capability between the System DMA and the TC.

3.12 Interprocessor Communication

Several mechanisms allow for communication between the MPU and the DSP on the OMAP5910 device. These include mailbox registers, MPU Interface, and shared memory space.

3.12.1 MPU/DSP Mailbox Registers

The MPU and DSP processors may communicate with each other via a mailbox-interrupt mechanism. This mechanism provides a very flexible software protocol between the processors. There are four sets of mailbox registers located in public TIPB space. The registers are shared between the two processors, so the MPU and DSP may both access these registers within their own public TIPB space, but read/write accessibility of each register is different for each processor.

There are four sets of mailbox registers: two for the MPU to send messages and issue an interrupt to the DSP, the other two for the DSP to send messages and issue an interrupt to the MPU. Each set of mailbox registers consists of two 16-bit registers and a 1-bit flag register. The interrupting processor can use one 16-bit register to pass a data word to the interrupted processor and the other 16-bit register to pass a command word.

Communication is achieved when one processor writes to the appropriate command word register which causes an interrupt to the other processor and sets the appropriate flag register. The interrupted processor acknowledges by reading the command word which causes the flag register to be cleared. An additional data-word register is also available in each mailbox register set to optionally communicate two words of data between the processors for each interrupt instead of just communicating the command word.

The information communicated by the command and data words are entirely user-defined. The data word may be optionally used to indicate an address pointer or status word.

3.12.2 MPU Interface (MPUI)

The MPU interface (MPUI) allows the MPU and the system DMA controller to communicate with the DSP and its peripherals. The MPUI allows access to the full memory space (16M bytes) of the DSP and the DSP public peripheral bus. Thus, the MPU and System DMA Controller both have read and write access to the complete DSP I/O space (128K bytes), including the control registers of the DSP public peripherals.

The MPUI port supports the following features:

- Four access modes:
  - Shared-access mode (SAM) for MPU access of DSP SARAM, DARAM, and external memory interface
  - Shared-access mode (SAM) for peripheral bus access
  - Host-only mode (HOM) for SARAM access
  - Host-only mode (HOM) for peripheral bus access
- Interrupt to MPU if access time-out occurs
- Programmable priority scheme (MPU vs. DMA)
- Packing and unpacking of data (16 bits to 32 bits, and vice versa)
- 32-bit single access support
- Software control endianism conversion
- System DMA capability to full DSP memory space (16M bytes)
- System DMA capability to the DSP public TIPB peripherals (up to 128K bytes space)

This port can be used for many functions, such as: MPU loading of program code into DSP program memory space, sharing of data between MPU and DSP, implementing interprocessing communication protocols via shared memory, or allowing MPU to use and control DSP Public TIPB Peripherals.

3.12.3 MPU/DSP Shared Memory

The OMAP5910 device implements a shared memory architecture via the Traffic Controller. Therefore, the MPU and DSP both have access to the same shared SRAM memory (192K bytes) as well as to the EMIFF and EMIFS memory space. Through the DSP Memory Management Unit (MMU), the MPU controls which regions of shared memory space the DSP is allowed to access. By setting up regions of shared memory, and defining a protocol for the MPU and DSP to access this shared memory, an interprocessor communication mechanism may be implemented. This method may be used in conjunction with the mailbox registers to create handshaking interrupts which will properly synchronize the MPU and DSP accesses to shared memory. Utilizing the shared memory in this fashion may be useful when the desired data to be passed between the MPU and DSP is larger than the two 16-bit words provided by each set of mailbox command and data registers.

For example, the MPU may need to provide the DSP with a list of pointers to perform a specific task as opposed to a single command and single pointer. Using shared memory and the mailboxes, the DSP could read the list of pointers from shared memory after receiving the interrupt caused by an MPU write to the mailbox command register.

3.13 DSP Hardware Accelerators

The TMS320C55x DSP core within the OMAP5910 device utilizes three powerful hardware accelerator modules which assist the DSP core in implementing specific algorithms that are commonly used in video compression applications such as MPEG4 encoders/decoders. These accelerators allow implementation of such algorithms using fewer DSP instruction cycles and dissipating less power than implementations using only the DSP core. The hardware accelerators are utilized via functions from the TMS320C55x Image/Video Processing Library available from Texas Instruments.

Utilizing the hardware accelerators, the Texas Instruments Image/Video Processing Library implements many useful functions, which include the following:

- Forward and Inverse Discrete Cosine Transform (DCT) (used for video compression/decompression)
- Motion Estimation (used for compression standards such as MPEG video encoding and H.26x encoding)
- Pixel Interpolation (enabling high-performance fractal-pixel motion estimation)
- Flexible 1D/2D Wavelet Processing (useful for JPEG2000, MPEG4, and other compression standards)

3.13.1 DCT/iDCT Accelerator

The DCT/iDCT hardware accelerator is used to implement Forward and Inverse DCT (Discrete Cosine Transform) algorithms. These DCT/iDCT algorithms can be used to implement a wide range of video compression standards including JPEG Encode/Decode, MPEG Video Encode/Decode, and H.26x Encode/Decode.

3.13.2 Motion Estimation Accelerator

The Motion Estimation hardware accelerator implements a high-performance motion estimation algorithm, enabling MPEG Video encoder or H.26x encoder applications. Motion estimation is typically one of the most computation-intensive operations in video-encoding systems.

3.13.3 Pixel Interpolation Accelerator

The Pixel Interpolation Accelerator enables high-performance pixel-interpolation algorithms, which allows for powerful fractal pixel motion estimation when used in conjunction with the Motion Estimation accelerator. Such algorithms provide significant improvement to video-encoding applications.

3.14 Power Supply Connection Examples

3.14.1 Core and I/O Voltage Supply Connections

The OMAP5910 device is extremely flexible regarding the implementation of the core and I/O voltage supplies of the device.

In a typical system, all of the core voltage supplies (CV_{DDx}) may be connected together and powered from one common supply. Likewise, all of the I/O voltage supplies (DV_{DDx}) may be connected together and powered from a common supply. Figure 3–4 illustrates this common system configuration.

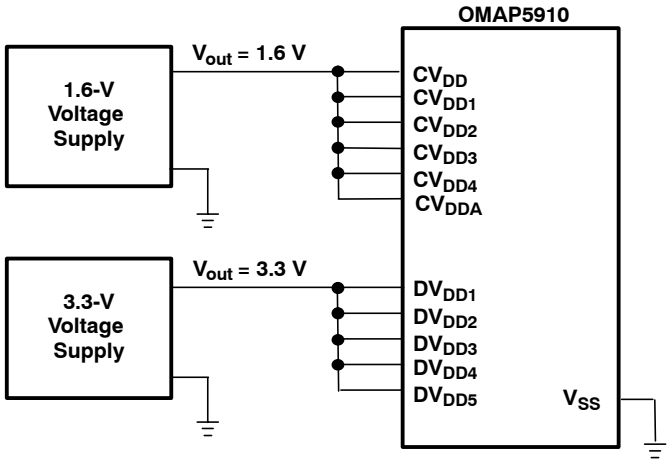

Figure 3–4. Supply Connections for a Typical System

Several of the I/O voltage supplies (DV_{DD3}, DV_{DD4} and DV_{DD5}) are capable of operating at lower voltages (1.8 V nominal) while the other I/O supplies run at 3.3 V nominal. This is advantageous for systems which mix standard 3.3-V devices with low voltage memory devices or other low voltage logic. Refer to Table 2–4 to determine which I/O pins are powered by each of the DV_{DDx} supplies. Figure 3–5 illustrates an example of this type of mixed voltage system configuration.

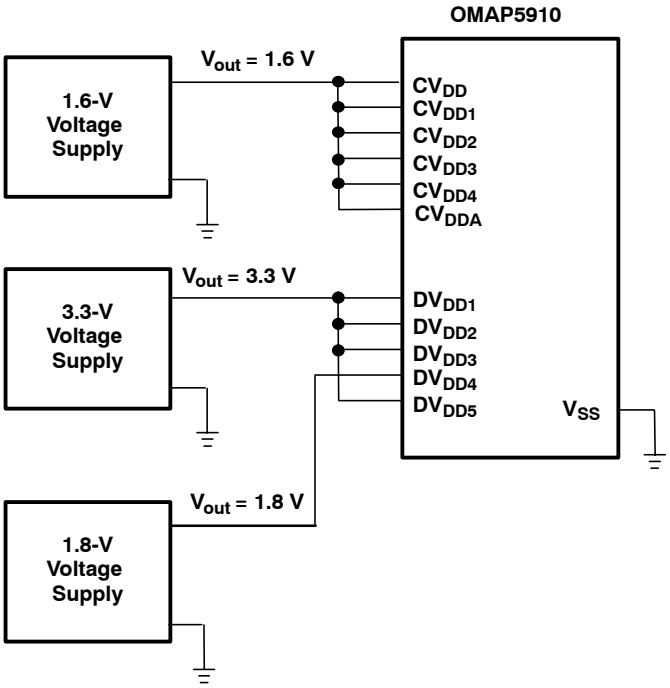

Figure 3–5. Supply Connections for a System With 1.8-V SDRAM

In the previous two examples, all CV_{DDx} pins are connected in common. However, the OMAP5910 device has dedicated CV_{DD} pins which supply power to different sections of the chip (as described in Table 2–4, Signal Descriptions). This feature could be useful in prototyping phases to troubleshoot power management features and perform advanced power. By isolating each CV_{DDx} bus from the power source through isolation jumpers or current sense resistors, the current draw into different domains may be measured separately. This type of supply isolation should only be done during prototyping as production system designs should connect all the CV_{DDx} pins together, preferably to a common board plane.

NOTE: There is no specific power sequencing for the different voltage supplies as long as all CV_{DDx} and DV_{DDx} voltages are ramped to valid operating levels within 500 ms of one another. Additionally, if certain I/O pins are unused in a specific system application, the DV_{DDx} supply pins which power these I/O must still be connected to valid operating voltage levels. See Section 5.2, *Recommended Operating Conditions*, for complete voltage requirements on all CV_{DDx} and DV_{DDx} power supply pins.

3.14.2 Core Voltage Noise Isolation

Two of the CV_{DD} pins on the OMAP5910 device, CV_{DDA} and CV_{DD4}, are dedicated to supply power for the ULPD DPLL and OMAP DPLL, respectively. In addition to using sound board design principles, these dedicated pins allow for added supply noise isolation circuitry to enable maximum performance from the OMAP5910 DPLLs. An example circuit is shown in Figure 3–6.

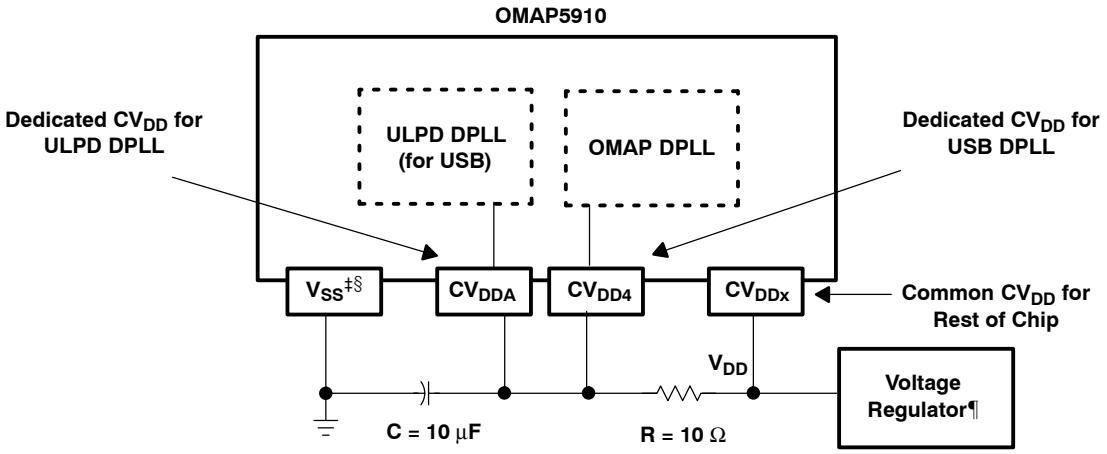

† This circuit is provided only as an example. Specific board layout implementation must minimize noise on the OMAP5910 voltage supply pins.
‡ Except where stated otherwise in this document, all V_{SS} pins on the OMAP5910 are common and must be connected directly to a common ground; however, the discrete capacitor in the RC filter circuit should be placed as close as possible to the V_{SS} (GZG balls AA1/Y3 or GDY balls E13/K9).
§ For special consideration with respect to the connection of V_{SS} (GZG ball V12 or GDY ball F6), refer to Section 5.6.1, *32-kHz Oscillator and Input Clock*.
¶ The voltage regulator must be selected to provide a voltage source with minimal low frequency noise.

Figure 3–6. External RC Circuit for DPLL CV_{DD} Noise Isolation†

3.15 MPU Register Descriptions

The following tables describe the MPU registers including register addresses, descriptions, required access widths, access types (R = read, W = write, RW = read/write) and reset values. These tables are organized by function with like peripherals or functions together and are therefore not necessarily in the order of ascending register addresses.

NOTE: All accesses to these registers must be of the data access widths indicated to avoid a TIPB bus error condition and a corresponding interrupt. Reserved addresses should never be accessed.

3.15.1 MPU Private Peripheral Registers

The MPU private peripheral registers include the following:

- Timers
  - MPU Timer 1 Register
  - MPU Timer 2 Registers
  - MPU Timer 3 Registers
  - MPU Watchdog Timer Registers
- Interrupt Handlers
  - MPU Level 1 Interrupt Handler Registers
  - MPU Level 2 Interrupt Handler Registers
- System Peripherals
  - System DMA Controller Registers
  - LCD Controller Registers

Table 3–14. MPU Timer 1 Registers

BYTE ADDRESS	REGISTER NAME	DESCRIPTION	ACCESS WIDTH	ACCESS TYPE	RESET VALUE
FFFE:C500	MPU_CNTL_TIMER_1	MPU Timer 1 Control Timer Register	32	RW	0000 0000h
FFFE:C504	MPU_LOAD_TIM_1	MPU Timer 1 Load Timer Register	32	W	undef
FFFE:C508	MPU_READ_TIM_1	MPU Timer 1 Read Timer Register	32	R	undef

Table 3–15. MPU Timer 2 Registers

BYTE ADDRESS	REGISTER NAME	DESCRIPTION	ACCESS WIDTH	ACCESS TYPE	RESET VALUE
FFFE:C600	MPU_CNTL_TIMER_2	MPU Timer 2 Control Timer Register	32	RW	0000 0000h
FFFE:C604	MPU_LOAD_TIM_2	MPU Timer 2 Load Timer Register	32	W	undef
FFFE:C608	MPU_READ_TIM_2	MPU Timer 2 Read Timer Register	32	R	undef

Table 3–16. MPU Timer 3 Registers

BYTE ADDRESS	REGISTER NAME	DESCRIPTION	ACCESS WIDTH	ACCESS TYPE	RESET VALUE
FFFE:C700	MPU_CNTL_TIMER_3	MPU Timer 3 Control Timer Register	32	RW	0000 0000h
FFFE:C704	MPU_LOAD_TIM_3	MPU Timer 3 Load Timer Register	32	W	undef
FFFE:C708	MPU_READ_TIM_3	MPU Timer 3 Read Timer Register	32	R	undef

Table 3–17. MPU Watchdog Timer Registers

BYTE ADDRESS	REGISTER NAME	DESCRIPTION	ACCESS WIDTH	ACCESS TYPE	RESET VALUE
FFFE:C800	MPU_CNTL_TIMER_WD	MPU WDT Control Timer Register	16	RW	0002h
FFFE:C804	MPU_LOAD_TIM_WD	MPU WDT Load Timer Register	16	W	FFFFh
FFFE:C804	MPU_READ_TIM_WD	MPU WDT Read Timer Register	16	R	FFFFh
FFFE:C808	MPU_TIMER_MODE_WD	MPU WDT Timer Mode Register	16	RW	8000h

Table 3–18. MPU Level 1 Interrupt Handler Registers

BYTE ADDRESS	REGISTER NAME	DESCRIPTION	ACCESS WIDTH	ACCESS TYPE	RESET VALUE
FFFE:CB00	MPU_L1_ITR	Interrupt Register	32	RW	0000 0000h
FFFE:CB04	MPU_L1_MIR	Mask Interrupt Register	32	RW	FFFF FFFFh
FFFE:CB08 – FFFE:CB0C		Reserved			
FFFE:CB10	MPU_L1_SIR_IRQ_CODE	IRQ Interrupt Encoded Source Register	32	R	0000 0000h
FFFE:CB14	MPU_L1_SIR_FIQ_CODE	FIQ Interrupt Encoded Source Register	32	R	0000 0000h
FFFE:CB18	MPU_L1_CONTROL_REG	Interrupt Control Register	32	RW	0000 0000h
FFFE:CB1C	MPU_L1_ILR0	Interrupt 0 Priority Level Register	32	RW	0000 0000h
FFFE:CB20	MPU_L1_ILR1	Interrupt 1 Priority Level Register	32	RW	0000 0000h
FFFE:CB24	MPU_L1_ILR2	Interrupt 2 Priority Level Register	32	RW	0000 0000h
FFFE:CB28	MPU_L1_ILR3	Interrupt 3 Priority Level Register	32	RW	0000 0000h
FFFE:CB2C	MPU_L1_ILR4	Interrupt 4 Priority Level Register	32	RW	0000 0000h
FFFE:CB30	MPU_L1_ILR5	Interrupt 5 Priority Level Register	32	RW	0000 0000h
FFFE:CB34	MPU_L1_ILR6	Interrupt 6 Priority Level Register	32	RW	0000 0000h
FFFE:CB38	MPU_L1_ILR7	Interrupt 7 Priority Level Register	32	RW	0000 0000h
FFFE:CB3C	MPU_L1_ILR8	Interrupt 8 Priority Level Register	32	RW	0000 0000h
FFFE:CB40	MPU_L1_ILR9	Interrupt 9 Priority Level Register	32	RW	0000 0000h
FFFE:CB44	MPU_L1_ILR10	Interrupt 10 Priority Level Register	32	RW	0000 0000h
FFFE:CB48	MPU_L1_ILR11	Interrupt 11 Priority Level Register	32	RW	0000 0000h
FFFE:CB4C	MPU_L1_ILR12	Interrupt 12 Priority Level Register	32	RW	0000 0000h
FFFE:CB50	MPU_L1_ILR13	Interrupt 13 Priority Level Register	32	RW	0000 0000h
FFFE:CB54	MPU_L1_ILR14	Interrupt 14 Priority Level Register	32	RW	0000 0000h
FFFE:CB58	MPU_L1_ILR15	Interrupt 15 Priority Level Register	32	RW	0000 0000h
FFFE:CB5C	MPU_L1_ILR16	Interrupt 16 Priority Level Register	32	RW	0000 0000h
FFFE:CB60	MPU_L1_ILR17	Interrupt 17 Priority Level Register	32	RW	0000 0000h
FFFE:CB64	MPU_L1_ILR18	Interrupt 18 Priority Level Register	32	RW	0000 0000h
FFFE:CB68	MPU_L1_ILR19	Interrupt 19 Priority Level Register	32	RW	0000 0000h
FFFE:CB6C	MPU_L1_ILR20	Interrupt 20 Priority Level Register	32	RW	0000 0000h
FFFE:CB70	MPU_L1_ILR21	Interrupt 21 Priority Level Register	32	RW	0000 0000h
FFFE:CB74	MPU_L1_ILR22	Interrupt 22 Priority Level Register	32	RW	0000 0000h
FFFE:CB78	MPU_L1_ILR23	Interrupt 23 Priority Level Register	32	RW	0000 0000h
FFFE:CB7C	MPU_L1_ILR24	Interrupt 24 Priority Level Register	32	RW	0000 0000h
FFFE:CB80	MPU_L1_ILR25	Interrupt 25 Priority Level Register	32	RW	0000 0000h
FFFE:CB84	MPU_L1_ILR26	Interrupt 26 Priority Level Register	32	RW	0000 0000h
FFFE:CB88	MPU_L1_ILR27	Interrupt 27 Priority Level Register	32	RW	0000 0000h
FFFE:CB8C	MPU_L1_ILR28	Interrupt 28 Priority Level Register	32	RW	0000 0000h
FFFE:CB90	MPU_L1_ILR29	Interrupt 29 Priority Level Register	32	RW	0000 0000h
FFFE:CB94	MPU_L1_ILR30	Interrupt 30 Priority Level Register	32	RW	0000 0000h
FFFE:CB98	MPU_L1_ILR31	Interrupt 31 Priority Level Register	32	RW	0000 0000h
FFFE:CB9C	MPU_L1_ISR	Software Interrupt Set Register	32	RW	0000 0000h

Table 3–19. MPU Level 2 Interrupt Handler Registers

BYTE ADDRESS	REGISTER NAME	DESCRIPTION	ACCESS WIDTH	ACCESS TYPE	RESET VALUE
FFFE:0000	MPU_L2_ITR	Interrupt Register	32	RW	0000 0000h
FFFE:0004	MPU_L2_MIR	Mask Interrupt Register	32	RW	FFFF FFFFh
FFFE:0008 – FFFE:000C		Reserved			
FFFE:0010	MPU_L2_SIR_IRQ_CODE	IRQ Interrupt Encoded Source Register	32	R	0000 0000h
FFFE:0014	MPU_L2_SIR_FIQ_CODE	FIQ Interrupt Encoded Source Register	32	R	0000 0000h
FFFE:0018	MPU_L2_CONTROL_REG	Interrupt Control Register	32	RW	0000 0000h
FFFE:001C	MPU_L2_ILR0	Interrupt 0 Priority Level Register	32	RW	0000 0000h
FFFE:0020	MPU_L2_ILR1	Interrupt 1 Priority Level Register	32	RW	0000 0000h
FFFE:0024	MPU_L2_ILR2	Interrupt 2 Priority Level Register	32	RW	0000 0000h
FFFE:0028	MPU_L2_ILR3	Interrupt 3 Priority Level Register	32	RW	0000 0000h
FFFE:002C	MPU_L2_ILR4	Interrupt 4 Priority Level Register	32	RW	0000 0000h
FFFE:0030	MPU_L2_ILR5	Interrupt 5 Priority Level Register	32	RW	0000 0000h
FFFE:0034	MPU_L2_ILR6	Interrupt 6 Priority Level Register	32	RW	0000 0000h
FFFE:0038	MPU_L2_ILR7	Interrupt 7 Priority Level Register	32	RW	0000 0000h
FFFE:003C	MPU_L2_ILR8	Interrupt 8 Priority Level Register	32	RW	0000 0000h
FFFE:0040	MPU_L2_ILR9	Interrupt 9 Priority Level Register	32	RW	0000 0000h
FFFE:0044	MPU_L2_ILR10	Interrupt 10 Priority Level Register	32	RW	0000 0000h
FFFE:0048	MPU_L2_ILR11	Interrupt 11 Priority Level Register	32	RW	0000 0000h
FFFE:004C	MPU_L2_ILR12	Interrupt 12 Priority Level Register	32	RW	0000 0000h
FFFE:0050	MPU_L2_ILR13	Interrupt 13 Priority Level Register	32	RW	0000 0000h
FFFE:0054	MPU_L2_ILR14	Interrupt 14 Priority Level Register	32	RW	0000 0000h
FFFE:0058	MPU_L2_ILR15	Interrupt 15 Priority Level Register	32	RW	0000 0000h
FFFE:005C	MPU_L2_ILR16	Interrupt 16 Priority Level Register	32	RW	0000 0000h
FFFE:0060	MPU_L2_ILR17	Interrupt 17 Priority Level Register	32	RW	0000 0000h
FFFE:0064	MPU_L2_ILR18	Interrupt 18 Priority Level Register	32	RW	0000 0000h
FFFE:0068	MPU_L2_ILR19	Interrupt 19 Priority Level Register	32	RW	0000 0000h
FFFE:006C	MPU_L2_ILR20	Interrupt 20 Priority Level Register	32	RW	0000 0000h
FFFE:0070	MPU_L2_ILR21	Interrupt 21 Priority Level Register	32	RW	0000 0000h
FFFE:0074	MPU_L2_ILR22	Interrupt 22 Priority Level Register	32	RW	0000 0000h
FFFE:0078	MPU_L2_ILR23	Interrupt 23 Priority Level Register	32	RW	0000 0000h
FFFE:007C	MPU_L2_ILR24	Interrupt 24 Priority Level Register	32	RW	0000 0000h
FFFE:0080	MPU_L2_ILR25	Interrupt 25 Priority Level Register	32	RW	0000 0000h
FFFE:0084	MPU_L2_ILR26	Interrupt 26 Priority Level Register	32	RW	0000 0000h
FFFE:0088	MPU_L2_ILR27	Interrupt 27 Priority Level Register	32	RW	0000 0000h
FFFE:008C	MPU_L2_ILR28	Interrupt 28 Priority Level Register	32	RW	0000 0000h
FFFE:0090	MPU_L2_ILR29	Interrupt 29 Priority Level Register	32	RW	0000 0000h
FFFE:0094	MPU_L2_ILR30	Interrupt 30 Priority Level Register	32	RW	0000 0000h
FFFE:0098	MPU_L2_ILR31	Interrupt 31 Priority Level Register	32	RW	0000 0000h
FFFE:009C	MPU_L2_ISR	Software Interrupt Set Register	32	RW	0000 0000h

Table 3–20. System DMA Controller Registers

BYTE ADDRESS	REGISTER NAME	DESCRIPTION	ACCESS WIDTH	ACCESS TYPE	RESET VALUE
FFFE:D800	SYS_DMA_CSDP_CH0	Channel 0 Source/Destination Parameters Register	16	RW	0000h
FFFE:D802	SYS_DMA_CCR_CH0	Channel 0 Control Register	16	RW	0000h
FFFE:D804	SYS_DMA_CICR_CH0	Channel 0 Interrupt Control Register	16	RW	0003h
FFFE:D806	SYS_DMA_CSR_CH0	Channel 0 Status Register	16	R	0000h
FFFE:D808	SYS_DMA_CSSA_L_CH0	Channel 0 Source Start Address Register LSB	16	RW	undef
FFFE:D80A	SYS_DMA_CSSA_U_CH0	Channel 0 Source Start Address Register MSB	16	RW	undef
FFFE:D80C	SYS_DMA_CDSA_L_CH0	Channel 0 Destination Start Address Register LSB	16	RW	undef
FFFE:D80E	SYS_DMA_CDSA_U_CH0	Channel 0 Destination Start Address Register MSB	16	RW	undef
FFFE:D810	SYS_DMA_CEN_CH0	Channel 0 Element Number Register	16	RW	undef
FFFE:D812	SYS_DMA_CFN_CH0	Channel 0 Frame Number Register	16	RW	undef
FFFE:D814	SYS_DMA_CFI_CH0	Channel 0 Frame Index Register	16	RW	undef
FFFE:D816	SYS_DMA_CEI_CH0	Channel 0 Element Index Register	16	RW	undef
FFFE:D818	SYS_DMA_CPC_CH0	Channel 0 Progress Counter Register	16	RW	undef
FFFE:D81A – FFFE:083E		Reserved			
FFFE:D840	SYS_DMA_CSDP_CH1	Channel 1 Source/Destination Parameters Register	16	RW	0000h
FFFE:D842	SYS_DMA_CCR_CH1	Channel 1 Control Register	16	RW	0000h
FFFE:D844	SYS_DMA_CICR_CH1	Channel 1 Interrupt Control Register	16	RW	0003h
FFFE:D846	SYS_DMA_CSR_CH1	Channel 1 Status Register	16	R	0000h
FFFE:D848	SYS_DMA_CSSA_L_CH1	Channel 1 Source Start Address Register LSB	16	RW	undef
FFFE:D84A	SYS_DMA_CSSA_U_CH1	Channel 1 Source Start Address Register MSB	16	RW	undef
FFFE:D84C	SYS_DMA_CDSA_L_CH1	Channel 1 Destination Start Address Register LSB	16	RW	undef
FFFE:D84E	SYS_DMA_CDSA_U_CH1	Channel 1 Destination Start Address Register MSB	16	RW	undef
FFFE:D850	SYS_DMA_CEN_CH1	Channel 1 Element Number Register	16	RW	undef
FFFE:D852	SYS_DMA_CFN_CH1	Channel 1 Frame Number Register	16	RW	undef
FFFE:D854	SYS_DMA_CFI_CH1	Channel 1 Frame Index Register	16	RW	undef
FFFE:D856	SYS_DMA_CEI_CH1	Channel 1 Element Index Register	16	RW	undef
FFFE:D858	SYS_DMA_CPC_CH1	Channel 1 Progress Counter Register	16	RW	undef
FFFE:D85A – FFFE:D87E		Reserved			
FFFE:D880	SYS_DMA_CSDP_CH2	Channel 2 Source/Destination Parameters Register	16	RW	0000h
FFFE:D882	SYS_DMA_CCR_CH2	Channel 2 Control Register	16	RW	0000h
FFFE:D884	SYS_DMA_CICR_CH2	Channel 2 Interrupt Control Register	16	RW	0003h
FFFE:D886	SYS_DMA_CSR_CH2	Channel 2 Status Register	16	R	0000h
FFFE:D888	SYS_DMA_CSSA_L_CH2	Channel 2 Source Start Address Register LSB	16	RW	undef
FFFE:D88A	SYS_DMA_CSSA_U_CH2	Channel 2 Source Start Address Register MSB	16	RW	undef
FFFE:D88C	SYS_DMA_CDSA_L_CH2	Channel 2 Destination Start Address Register LSB	16	RW	undef
FFFE:D88E	SYS_DMA_CDSA_U_CH2	Channel 2 Destination Start Address Register MSB	16	RW	undef
FFFE:D890	SYS_DMA_CEN_CH2	Channel 2 Element Number Register	16	RW	undef
FFFE:D892	SYS_DMA_CFN_CH2	Channel 2 Frame Number Register	16	RW	undef
FFFE:D894	SYS_DMA_CFI_CH2	Channel 2 Frame Index Register	16	RW	undef
FFFE:D896	SYS_DMA_CEI_CH2	Channel 2 Element Index Register	16	RW	undef
FFFE:D898	SYS_DMA_CPC_CH2	Channel 2 Progress Counter Register	16	RW	undef

Table 3–20. System DMA Controller Registers (Continued)

BYTE ADDRESS	REGISTER NAME	DESCRIPTION	ACCESS WIDTH	ACCESS TYPE	RESET VALUE
FFFE:D89A – FFFE:D8BE		Reserved			
FFFE:D8C0	SYS_DMA_CSDP_CH3	Channel 3 Source/Destination Parameters Register	16	RW	0000h
FFFE:D8C2	SYS_DMA_CCR_CH3	Channel 3 Control Register	16	RW	0000h
FFFE:D8C4	SYS_DMA_CICR_CH3	Channel 3 Interrupt Control Register	16	RW	0003h
FFFE:D8C6	SYS_DMA_CSR_CH3	Channel 3 Status Register	16	R	0000h
FFFE:D8C8	SYS_DMA_CSSA_L_CH3	Channel 3 Source Start Address Register LSB	16	RW	undef
FFFE:D8CA	SYS_DMA_CSSA_U_CH3	Channel 3 Source Start Address Register MSB	16	RW	undef
FFFE:D8CC	SYS_DMA_CDSA_L_CH3	Channel 3 Destination Start Address Register LSB	16	RW	undef
FFFE:D8CE	SYS_DMA_CDSA_U_CH3	Channel 3 Destination Start Address Register MSB	16	RW	undef
FFFE:D8D0	SYS_DMA_CEN_CH3	Channel 3 Element Number Register	16	RW	undef
FFFE:D8D2	SYS_DMA_CFN_CH3	Channel 3 Frame Number Register	16	RW	undef
FFFE:D8D4	SYS_DMA_CFI_CH3	Channel 3 Frame Index Register	16	RW	undef
FFFE:D8D6	SYS_DMA_CEI_CH3	Channel 3 Element Index Register	16	RW	undef
FFFE:D8D8	SYS_DMA_CPC_CH3	Channel 3 Progress Counter Register	16	RW	undef
FFFE:D8DA – FFFE:D8FE		Reserved			
FFFE:D900	SYS_DMA_CSDP_CH4	Channel 4 Source/Destination Parameters Register	16	RW	0000h
FFFE:D902	SYS_DMA_CCR_CH4	Channel 4 Control Register	16	RW	0000h
FFFE:D904	SYS_DMA_CICR_CH4	Channel 4 Interrupt Control Register	16	RW	0003h
FFFE:D906	SYS_DMA_CSR_CH4	Channel 4 Status Register	16	R	0000h
FFFE:D908	SYS_DMA_CSSA_L_CH4	Channel 4 Source Start Address Register LSB	16	RW	undef
FFFE:D90A	SYS_DMA_CSSA_U_CH4	Channel 4 Source Start Address Register MSB	16	RW	undef
FFFE:D90C	SYS_DMA_CDSA_L_CH4	Channel 4 Destination Start Address Register LSB	16	RW	undef
FFFE:D90E	SYS_DMA_CDSA_U_CH4	Channel 4 Destination Start Address Register MSB	16	RW	undef
FFFE:D910	SYS_DMA_CEN_CH4	Channel 4 Element Number Register	16	RW	undef
FFFE:D912	SYS_DMA_CFN_CH4	Channel 4 Frame Number Register	16	RW	undef
FFFE:D914	SYS_DMA_CFI_CH4	Channel 4 Frame Index Register	16	RW	undef
FFFE:D916	SYS_DMA_CEI_CH4	Channel 4 Element Index Register	16	RW	undef
FFFE:D918	SYS_DMA_CPC_CH4	Channel 4 Progress Counter Register	16	RW	undef
FFFE:D91A – FFFE:D93E		Reserved			
FFFE:D940	SYS_DMA_CSDP_CH5	Channel 5 Source/Destination Parameters Register	16	RW	0000h
FFFE:D942	SYS_DMA_CCR_CH5	Channel 5 Control Register	16	RW	0000h
FFFE:D944	SYS_DMA_CICR_CH5	Channel 5 Interrupt Control Register	16	RW	0003h
FFFE:D946	SYS_DMA_CSR_CH5	Channel 5 Status Register	16	R	0000h
FFFE:D948	SYS_DMA_CSSA_L_CH5	Channel 5 Source Start Address Register LSB	16	RW	undef
FFFE:D94A	SYS_DMA_CSSA_U_CH5	Channel 5 Source Start Address Register MSB	16	RW	undef
FFFE:D94C	SYS_DMA_CDSA_L_CH5	Channel 5 Destination Start Address Register LSB	16	RW	undef
FFFE:D94E	SYS_DMA_CDSA_U_CH5	Channel 5 Destination Start Address Register MSB	16	RW	undef
FFFE:D950	SYS_DMA_CEN_CH5	Channel 5 Element Number Register	16	RW	undef
FFFE:D952	SYS_DMA_CFN_CH5	Channel 5 Frame Number Register	16	RW	undef
FFFE:D954	SYS_DMA_CFI_CH5	Channel 5 Frame Index Register	16	RW	undef
FFFE:D956	SYS_DMA_CEI_CH5	Channel 5 Element Index Register	16	RW	undef

Table 3–20. System DMA Controller Registers (Continued)

BYTE ADDRESS	REGISTER NAME	DESCRIPTION	ACCESS WIDTH	ACCESS TYPE	RESET VALUE
FFFE:D958	SYS_DMA_CPC_CH5	Channel 5 Progress Counter Register	16	RW	undef
FFFE:D95A – FFFE:D97E		Reserved			
FFFE:D980	SYS_DMA_CSDP_CH6	Channel 6 Source/Destination Parameters Register	16	RW	0000h
FFFE:D982	SYS_DMA_CCR_CH6	Channel 6 Control Register	16	RW	0000h
FFFE:D984	SYS_DMA_CICR_CH6	Channel 6 Interrupt Control Register	16	RW	0003h
FFFE:D986	SYS_DMA_CSR_CH6	Channel 6 Status Register	16	R	0000h
FFFE:D988	SYS_DMA_CSSA_L_CH6	Channel 6 Source Start Address Register LSB	16	RW	undef
FFFE:D98A	SYS_DMA_CSSA_U_CH6	Channel 6 Source Start Address Register MSB	16	RW	undef
FFFE:D98C	SYS_DMA_CDSA_L_CH6	Channel 6 Destination Start Address Register LSB	16	RW	undef
FFFE:D98E	SYS_DMA_CDSA_U_CH6	Channel 6 Destination Start Address Register MSB	16	RW	undef
FFFE:D990	SYS_DMA_CEN_CH6	Channel 6 Element Number Register	16	RW	undef
FFFE:D992	SYS_DMA_CFN_CH6	Channel 6 Frame Number Register	16	RW	undef
FFFE:D994	SYS_DMA_CFI_CH6	Channel 6 Frame Index Register	16	RW	undef
FFFE:D996	SYS_DMA_CEI_CH6	Channel 6 Element Index Register	16	RW	undef
FFFE:D998	SYS_DMA_CPC_CH6	Channel 6 Progress Counter Register	16	RW	undef
FFFE:D99A – FFFE:D9BE		Reserved			
FFFE:D9C0	SYS_DMA_CSDP_CH7	Channel 7 Source/Destination Parameters Register	16	RW	0000h
FFFE:D9C2	SYS_DMA_CCR_CH7	Channel 7 Control Register	16	RW	0000h
FFFE:D9C4	SYS_DMA_CICR_CH7	Channel 7 Interrupt Control Register	16	RW	0003h
FFFE:D9C6	SYS_DMA_CSR_CH7	Channel 7 Status Register	16	R	0000h
FFFE:D9C8	SYS_DMA_CSSA_L_CH7	Channel 7 Source Start Address Register LSB	16	RW	undef
FFFE:D9CA	SYS_DMA_CSSA_U_CH7	Channel 7 Source Start Address Register MSB	16	RW	undef
FFFE:D9CC	SYS_DMA_CDSA_L_CH7	Channel 7 Destination Start Address Register LSB	16	RW	undef
FFFE:D9CE	SYS_DMA_CDSA_U_CH7	Channel 7 Destination Start Address Register MSB	16	RW	undef
FFFE:D9D0	SYS_DMA_CEN_CH7	Channel 7 Element Number Register	16	RW	undef
FFFE:D9D2	SYS_DMA_CFN_CH7	Channel 7 Frame Number Register	16	RW	undef
FFFE:D9D4	SYS_DMA_CFI_CH7	Channel 7 Frame Index Register	16	RW	undef
FFFE:D9D6	SYS_DMA_CEI_CH7	Channel 7 Element Index Register	16	RW	undef
FFFE:D9D8	SYS_DMA_CPC_CH7	Channel 7 Progress Counter Register	16	RW	undef
FFFE:D9DA – FFFE:D9FE		Reserved			
FFFE:DA00	SYS_DMA_CSDP_CH8	Channel 8 Source/Destination Parameters Register	16	RW	0000h
FFFE:DA02	SYS_DMA_CCR_CH8	Channel 8 Control Register	16	RW	0000h
FFFE:DA04	SYS_DMA_CICR_CH8	Channel 8 Interrupt Control Register	16	RW	0003h
FFFE:DA06	SYS_DMA_CSR_CH8	Channel 8 Status Register	16	R	0000h
FFFE:DA08	SYS_DMA_CSSA_L_CH8	Channel 8 Source Start Address Register LSB	16	RW	undef
FFFE:DA0A	SYS_DMA_CSSA_U_CH8	Channel 8 Source Start Address Register MSB	16	RW	undef
FFFE:DA0C	SYS_DMA_CDSA_L_CH8	Channel 8 Destination Start Address Register LSB	16	RW	undef
FFFE:DA0E	SYS_DMA_CDSA_U_CH8	Channel 8 Destination Start Address Register MSB	16	RW	undef
FFFE:DA10	SYS_DMA_CEN_CH8	Channel 8 Element Number Register	16	RW	undef
FFFE:DA12	SYS_DMA_CFN_CH8	Channel 8 Frame Number Register	16	RW	undef
FFFE:DA14	SYS_DMA_CFI_CH8	Channel 8 Frame Index Register	16	RW	undef

Table 3–20. System DMA Controller Registers (Continued)

BYTE ADDRESS	REGISTER NAME	DESCRIPTION	ACCESS WIDTH	ACCESS TYPE	RESET VALUE
FFFE:DA16	SYS_DMA_CEI_CH8	Channel 8 Element Index Register	16	RW	undef
FFFE:DA18	SYS_DMA_CPC_CH8	Channel 8 Progress Counter Register	16	RW	undef
FFFE:DA1A – FFFE:DAFE		Reserved			
FFFE:DB00	SYS_DMA_LCD_CTRL	LCD Channel Control Register	16	RW	0000h
FFFE:DB02	SYS_DMA_LCD_TOP_F1_L	LCD Channel Top Address Frame Buffer 1 Register LSB	16	RW	undef
FFFE:DB04	SYS_DMA_LCD_TOP_F1_U	LCD Channel Top Address Frame Buffer 1 Register MSB	16	RW	undef
FFFE:DB06	SYS_DMA_LCD_BOT_F1_L	LCD Channel Bottom Address Frame Buffer 1 Register LSB	16	RW	undef
FFFE:DB08	SYS_DMA_LCD_BOT_F1_U	LCD Channel Bottom Address Frame Buffer 1 Register MSB	16	RW	undef
FFFE:DB0A	SYS_DMA_LCD_TOP_F2_L	LCD Channel Top Address Frame Buffer 2 Register LSB	16	RW	undef
FFFE:DB0C	SYS_DMA_LCD_TOP_F2_U	LCD Channel Top Address Frame Buffer 2 Register MSB	16	RW	undef
FFFE:DB0E	SYS_DMA_LCD_BOT_F2_L	LCD Channel Bottom Address Frame Buffer 2 Register LSB	16	RW	undef
FFFE:DB10	SYS_DMA_LCD_BOT_F2_U	LCD Channel Bottom Address Frame Buffer 2 Register MSB	16	RW	undef
FFFE:DB12 – FFFE:DBFE		Reserved			
FFFE:DC00	SYS_DMA_GCR	DMA Global Control Register	16	RW	0008h

Table 3–21. LCD Controller Registers

BYTE ADDRESS	REGISTER NAME	DESCRIPTION	ACCESS WIDTH	ACCESS TYPE	RESET VALUE
FFFE:C000	LCD_CONTROL	LCD Control Register	32	RW	0x0000 0000
FFFE:C004	LCD_TIMING0	LCD Timing 0 Register	32	RW	undef
FFFE:C008	LCD_TIMING1	LCD Timing 1 Register	32	RW	0x0000 0000
FFFE:C00C	LCD_TIMING2	LCD Timing 2 Register	32	RW	0x0000 0000
FFFE:C010	LCD_STATUS	LCD Status Register	32	RW	0x0000 0000
FFFE:C014	LCD_SUBPANEL	LCD Subpanel Display Register	32	RW	0x0000 0000

3.15.2 MPU Public Peripheral Registers

The MPU public peripheral registers include the following:

- Serial Ports
  - McBSP2 Registers
  - MICROWIRE Registers
  - I^2C Registers
  - HDQ/1-Wire Interface Registers
  - MMC/SD Registers
  - USB Function Registers
  - USB Host Registers
- Parallel Ports
  - Camera Interface Registers
- Human Interface support
  - MPUIO/Keyboard Registers
  - PWL Registers
  - PWT Registers
  - LED Pulse Generator 1 Registers
  - LED Pulse Generator 2 Registers
- Timers and Counters
  - 32k Timer Registers
  - Real-Time Clock Registers
  - Frame Adjustment Counter Registers

Table 3–22. McBSP2 Registers

BYTE ADDRESS	REGISTER NAME	DESCRIPTION	ACCESS WIDTH	ACCESS TYPE	RESET VALUE
FFFB:1000	MCBSP2_DRR2	McBSP2 Data Receive Register 2	16	RW	0000h
FFFB:1002	MCBSP2_DRR1	McBSP2 Data Receive Register 1	16	RW	0000h
FFFB:1004	MCBSP2_DXR2	McBSP2 Data Transmit Register 2	16	RW	0000h
FFFB:1006	MCBSP2_DXR1	McBSP2 Data Transmit Register 1	16	RW	0000h
FFFB:1008	MCBSP2_SPCR2	McBSP2 Serial Port Control Register 2	16	RW	0000h
FFFB:100A	MCBSP2_SPCR1	McBSP2 Serial Port Control Register 1	16	RW	0000h
FFFB:100C	MCBSP2_RCR2	McBSP2 Receive Control Register 2	16	RW	0000h
FFFB:100E	MCBSP2_RCR1	McBSP2 Receive Control Register 1	16	RW	0000h
FFFB:1010	MCBSP2_XCR2	McBSP2 Transmit Control Register 2	16	RW	0000h
FFFB:1012	MCBSP2_XCR1	McBSP2 Transmit Control Register 1	16	RW	0000h
FFFB:1014	MCBSP2_SRGR2	McBSP2 Sample Rate Generator Register 2	16	RW	2000h
FFFB:1016	MCBSP2_SRGR1	McBSP2 Sample Rate Generator Register 1	16	RW	0001h
FFFB:1018	MCBSP2_MCR2	McBSP2 Multichannel Control Register 2	16	RW	0000h
FFFB:101A	MCBSP2_MCR1	McBSP2 Multichannel Control Register 1	16	RW	0000h
FFFB:101C	MCBSP2_RCERA	McBSP2 Receive Channel Enable Register Partition A	16	RW	0000h
FFFB:101E	MCBSP2_RCERB	McBSP2 Receive Channel Enable Register Partition B	16	RW	0000h
FFFB:1020	MCBSP2_XCERA	McBSP2 Transmit Channel Enable Register Partition A	16	RW	0000h
FFFB:1022	MCBSP2_XCERB	McBSP2 Transmit Channel Enable Register Partition B	16	RW	0000h
FFFB:1024	MCBSP2_PCR0	McBSP2 Pin Control Register 0	16	RW	0000h
FFFB:1026	MCBSP2_RCERC	McBSP2 Receive Channel Enable Register Partition C	16	RW	0000h
FFFB:1028	MCBSP2_RCERD	McBSP2 Receive Channel Enable Register Partition D	16	RW	0000h
FFFB:102A	MCBSP2_XCERC	McBSP2 Transmit Channel Enable Register Partition C	16	RW	0000h
FFFB:102C	MCBSP2_XCERD	McBSP2 Transmit Channel Enable Register Partition D	16	RW	0000h
FFFB:102E	MCBSP2_RCERE	McBSP2 Receive Channel Enable Register Partition E	16	RW	0000h
FFFB:1030	MCBSP2_RCERF	McBSP2 Receive Channel Enable Register Partition F	16	RW	0000h
FFFB:1032	MCBSP2_XCERE	McBSP2 Transmit Channel Enable Register Partition E	16	RW	0000h
FFFB:1034	MCBSP2_XCERF	McBSP2 Transmit Channel Enable Register Partition F	16	RW	0000h
FFFB:1036	MCBSP2_RCERG	McBSP2 Receive Channel Enable Register Partition G	16	RW	0000h
FFFB:1038	MCBSP2_RCERH	McBSP2 Receive Channel Enable Register Partition H	16	RW	0000h
FFFB:103A	MCBSP2_XCERG	McBSP2 Transmit Channel Enable Register Partition G	16	RW	0000h
FFFB:103C	MCBSP2_XCERH	McBSP2 Transmit Channel Enable Register Partition H	16	RW	0000h

Table 3–23. MICROWIRE Registers

BYTE ADDRESS	REGISTER NAME	DESCRIPTION	ACCESS WIDTH	ACCESS TYPE	RESET VALUE
FFFB:3000	TD	MICROWIRE Transmit Data Register	16	W	undef
FFFB:3000	RD	MICROWIRE Receive Data Register	16	R	undef
FFFB:3004	CSR	MICROWIRE Control and Status Register	16	RW	undef
FFFB:3008	SR1	MICROWIRE Setup Register 1	16	RW	undef
FFFB:300C	SR2	MICROWIRE Setup Register 2	16	RW	undef
FFFB:3010	SR3	MICROWIRE Setup Register 3	16	RW	0000h
FFFB:3014	SR4	MICROWIRE Setup Register 4	16	RW	0000h
FFFB:3018	SR5	MICROWIRE Setup Register 5	16	RW	0000h

Table 3–24. I²C Registers

BYTE ADDRESS	REGISTER NAME	DESCRIPTION	ACCESS WIDTH	ACCESS TYPE	RESET VALUE
FFFB:3800	I2C_REV	I²C Module Version Register	16	RW	0011h
FFFB:3804	I2C_IE	I²C Interrupt Enable Register	16	RW	0000h
FFFB:3808	I2C_STAT	I²C Status Register	16	R	0000h
FFFB:380C	I2C_IV	I²C Interrupt Vector Register	16	R	0000h
FFFB:3810		Reserved			
FFFB:3814	I2C_BUF	I²C Buffer Configuration Register	16	RW	0000h
FFFB:3818	I2C_CNT	I²C Data Counter Register	16	RW	0000h
FFFB:381C	I2C_DATA	I²C Data Access Register	16	RW	0000h
FFFB:3820		Reserved			
FFFB:3824	I2C_CON	I²C Configuration Register	16	RW	0000h
FFFB:3828	I2C_OA	I²C Own Address Register	16	RW	0000h
FFFB:382C	I2C_SA	I²C Slave Address Register	16	RW	03FFh
FFFB:3830	I2C_PSC	I²C Clock Prescaler Register	16	RW	0000h
FFFB:3834	I2C_SCLL	I²C SCL Low Timer Register	16	RW	0000h
FFFB:3838	I2C_SCLH	I²C SCL High Timer Register	16	RW	0000h
FFFB:383C	I2C_SYSTEST	I²C System Test Register	16	RW	0000h

Table 3–25. HDQ/1-Wire Interface Registers

BYTE ADDRESS	REGISTER NAME	DESCRIPTION	ACCESS WIDTH	ACCESS TYPE	RESET VALUE
FFFB:C000	TXR	TX Write Data Register	8	RW	00h
FFFB:C004	RXR	RX Receive Buffer Register	8	R	undef
FFFB:C008	CSR	Control and Status Register	8	RW	00h
FFFB:C00C	ISR	Interrupt Status Register	8	RW	00h

Table 3–26. MMC/SD Registers

BYTE ADDRESS	REGISTER NAME	DESCRIPTION	ACCESS WIDTH	ACCESS TYPE	RESET VALUE
FFFB:7800	MMC_CMD	MMC Command	16	RW	0000h
FFFB:7804	MMC_ARGL	MMC Argument Low	16	RW	0000h
FFFB:7808	MMC_ARGH	MMC Argument High	16	RW	0000h
FFFB:780C	MMC_CON	MMC System Configuration	16	RW	0000h
FFFB:7810	MMC_STAT	MMC Status	16	RW	0000h
FFFB:7814	MMC_IE	MMC System Interrupt Enable	16	RW	0000h
FFFB:7818	MMC_CTO	MMC Command Timeout	16	RW	0000h
FFFB:781C	MMC_DTO	MMC Data Timeout	16	RW	0000h
FFFB:7820	MMC_DATA	MMC TX/RX FIFO Data	16	RW	0000h
FFFB:7824	MMC_BLEN	MMC Block Length	16	RW	0000h
FFFB:7828	MMC_NBLK	MMC Number Of Blocks	16	RW	0000h
FFFB:782C	MMC_BUF	MMC Buffer Configuration	16	RW	1F00h
FFFB:7834	MMC_SDIO	MMC SDIO Mode Configuration	16	RW	0000h
FFFB:7838	MMC_SYST	MMC System Test	16	RW	2000h
FFFB:783C	MMC_REV	MMC Module Version	16	R	–
FFFB:7840	MMC_RSP0	MMC Command Response 0	16	R	undef
FFFB:7844	MMC_RSP1	MMC Command Response 1	16	R	undef
FFFB:7848	MMC_RSP2	MMC Command Response 2	16	R	undef
FFFB:784C	MMC_RSP3	MMC Command Response 3	16	R	undef
FFFB:7850	MMC_RSP4	MMC Command Response 4	16	R	undef
FFFB:7854	MMC_RSP5	MMC Command Response 5	16	R	undef
FFFB:7858	MMC_RSP6	MMC Command Response 6	16	R	undef
FFFB:785C	MMC_RSP7	MMC Command Response 7	16	R	undef

Table 3–27. USB Function Registers

BYTE ADDRESS	REGISTER NAME	DESCRIPTION	ACCESS WIDTH	ACCESS TYPE	RESET VALUE
FFFB:4000	REV	Revision Register	16	R	–
FFFB:4004	EP_NUM	Endpoint Selection Register	16	RW	0000h
FFFB:4008	DATA	Data Register	16	RW	undef
FFFB:400C	CTRL	Control Register	16	RW	0000h
FFFB:4010	STAT_FLG	Status Flag Register	16	R	0202h
FFFB:4014	RXFSTAT	Receive FIFO Status Register	16	R	0000h
FFFB:4018	SYSCON1	System Configuration 1 Register	16	RW	0000h
FFFB:401C	SYSCON2	System Configuration 2 Register	16	RW	0000h
FFFB:4020	DEVSTAT	Device Status Register	16	R	undef
FFFB:4024	SOF	Start of Frame Register	16	R	0000h
FFFB:4028	IRQ_EN	Interrupt Enable Register	16	RW	undef
FFFB:402C	DMA_IRQ_EN	DMA Interrupt Enable Register	16	RW	undef
FFFB:4030	IRQ_SRC	Interrupt Source Register	16	RW	0000h
FFFB:4034	EPN_STAT	Endpoint Interrupt Status Register	16	R	0000h
FFFB:4038	DMAN_STAT	DMA Endpoint Interrupt Status Register	16	R	0000h
FFFB:403C		Reserved			
FFFB:4040	RXDMA_CFG	Receive Channels DMA Configuration Register	16	RW	0000h
FFFB:4044	TXDMA_CFG	Transmit Channels DMA Configuration Register	16	RW	0000h
FFFB:4048	DATA_DMA	DMA FIFO Data Register	16	RW	undef
FFFB:404C		Reserved			
FFFB:4050	TXDMA0	Transmit DMA Control 0 Register	16	RW	0000h
FFFB:4054	TXDMA1	Transmit DMA Control 1 Register	16	RW	0000h
FFFB:4058	TXDMA2	Transmit DMA Control 2 Register	16	RW	0000h
FFFB:405C		Reserved			
FFFB:4060	RXDMA0	Receive DMA Control 0 Register	16	RW	0000h
FFFB:4064	RXDMA1	Receive DMA Control 1 Register	16	RW	0000h
FFFB:4068	RXDMA2	Receive DMA Control 2 Register	16	RW	0000h
FFFB:406C – FFFB:407C		Reserved			
FFFB:4080	EP0	Endpoint Configuration 0 Register	16	RW	0000h
FFFB:4084	EP1_RX	Receive Endpoint Configuration 1 Register	16	RW	undef
FFFB:4088	EP2_RX	Receive Endpoint Configuration 2 Register	16	RW	undef
FFFB:408C	EP3_RX	Receive Endpoint Configuration 3 Register	16	RW	undef
FFFB:4090	EP4_RX	Receive Endpoint Configuration 4 Register	16	RW	undef
FFFB:4094	EP5_RX	Receive Endpoint Configuration 5 Register	16	RW	undef
FFFB:4098	EP6_RX	Receive Endpoint Configuration 6 Register	16	RW	undef
FFFB:409C	EP7_RX	Receive Endpoint Configuration 7 Register	16	RW	undef
FFFB:40A0	EP8_RX	Receive Endpoint Configuration 8 Register	16	RW	undef
FFFB:40A4	EP9_RX	Receive Endpoint Configuration 9 Register	16	RW	undef
FFFB:40A8	EP10_RX	Receive Endpoint Configuration 10 Register	16	RW	undef
FFFB:40AC	EP11_RX	Receive Endpoint Configuration 11 Register	16	RW	undef
FFFB:40B0	EP12_RX	Receive Endpoint Configuration 12 Register	16	RW	undef
FFFB:40B4	EP13_RX	Receive Endpoint Configuration 13 Register	16	RW	undef
FFFB:40B8	EP14_RX	Receive Endpoint Configuration 14 Register	16	RW	undef

Table 3–27. USB Function Registers (Continued)

BYTE ADDRESS	REGISTER NAME	DESCRIPTION	ACCESS WIDTH	ACCESS TYPE	RESET VALUE
FFFB:40BC	EP15_RX	Receive Endpoint Configuration 15 Register	16	RW	undef
FFFB:40C0		Reserved			
FFFB:40C4	EP1_TX	Transmit Endpoint Configuration 1 Register	16	RW	undef
FFFB:40C8	EP2_TX	Transmit Endpoint Configuration 2 Register	16	RW	undef
FFFB:40CC	EP3_TX	Transmit Endpoint Configuration 3 Register	16	RW	undef
FFFB:40D0	EP4_TX	Transmit Endpoint Configuration 4 Register	16	RW	undef
FFFB:40D4	EP5_TX	Transmit Endpoint Configuration 5 Register	16	RW	undef
FFFB:40D8	EP6_TX	Transmit Endpoint Configuration 6 Register	16	RW	undef
FFFB:40DC	EP7_TX	Transmit Endpoint Configuration 7 Register	16	RW	undef
FFFB:40E0	EP8_TX	Transmit Endpoint Configuration 8 Register	16	RW	undef
FFFB:40E4	EP9_TX	Transmit Endpoint Configuration 9 Register	16	RW	undef
FFFB:40E8	EP10_TX	Transmit Endpoint Configuration 10 Register	16	RW	undef
FFFB:40EC	EP11_TX	Transmit Endpoint Configuration 11 Register	16	RW	undef
FFFB:40F0	EP12_TX	Transmit Endpoint Configuration 12 Register	16	RW	undef
FFFB:40F4	EP13_TX	Transmit Endpoint Configuration 13 Register	16	RW	undef
FFFB:40F8	EP14_TX	Transmit Endpoint Configuration 14 Register	16	RW	undef
FFFB:40FC	EP15_TX	Transmit Endpoint Configuration 15 Register	16	RW	undef

Table 3–28. USB Host Controller Registers

BYTE ADDRESS	REGISTER NAME	DESCRIPTION	ACCESS WIDTH	ACCESS TYPE	RESET VALUE
FFFB:A000	HcRevision	OHCI Revision Register	32	R	0000 0010h
FFFB:A004	HcControl	Host Controller Operating Mode Register	32	RW	0000 0000h
FFFB:A008	HcCommandStatus	Host Controller Command and Status Register	32	RW	0000 0000h
FFFB:A00C	HcInterruptStatus	Host Controller Interrupt Status Register	32	RW	0000 0000h
FFFB:A010	HcInterruptEnable	Host Controller Interrupt Enable Register	32	RW	0000 0000h
FFFB:A014	HcInterruptDisable	Host Controller Interrupt Disable Register	32	R	0000 0000h
FFFB:A018	HcHCCA	LB Virtual Address HCCA Register	32	RW	0000 0000h
FFFB:A01C	HcPeriodCurrentED	LB Virtual Address Current Periodic EP Descriptor Register	32	RW	0000 0000h
FFFB:A020	HcControlHeadED	LB Virtual Address Control EP Descriptor List Head Register	32	RW	0000 0000h
FFFB:A024	HcControlCurrentED	LB Virtual Address Current Control EP Descriptor Register	32	RW	0000 0000h
FFFB:A028	HcBulkHeadED	LB Virtual Address Bulk EP Descriptor List Head Register	32	RW	0000 0000h
FFFB:A02C	HcBulkCurrentED	LB Virtual Address Current Bulk EP Descriptor Register	32	RW	0000 0000h
FFFB:A030	HcDoneHead	LB Virtual Address Retired Transfer Descriptor List Head Register	32	R	undef
FFFB:A034	HcFmInterval	Frame Interval Register	32	RW	0000 2EDFh
FFFB:A038	HcFmRemaining	Remaining Frame Time Register	32	R	0000 0000h
FFFB:A03C	HcFmNumber	Remaining Frame Number Register	32	R	0000 0000h
FFFB:A040	HcPeriodicStart	Periodic Start Time Register	32	RW	0000 0000h
FFFB:A044	HcLSThreshold	Low Speed Start Threshold Register	32	RW	0000 0628h
FFFB:A048	HcRhDescriptorA	USB Root Hub Descriptor Register A	32	RW	0A00 1203h
FFFB:A04C	HcRhDescriptorB	USB Root Hub Descriptor Register B	32	RW	0000 0000h
FFFB:A050	HcRhStatus	USB Root Hub Status Register	32	RW	0000 0000h
FFFB:A054	HcRhPortStatus1	Port 1 Control and Status Register	32	RW	0000 0100h
FFFB:A058	HcRhPortStatus2	Port 2 Control and Status Register	32	RW	0000 0100h
FFFB:A05C	HcRhPortStatus3	Port 3 Control and Status Register	32	RW	0000 0100h
FFFB:A060 – FFFB:A0DC		Reserved			
FFFB:A0E0	HostUEAddr	LB Virtual Address Last Unrecoverable Error Register	32	R	0000 0000h
FFFB:A0E4	HostUEStatus	LB Cycle Type Last Unrecoverable Error Register	32	R	0000 0000h
FFFB:A0E8	HostTimeoutCtrl	USB Host Mastered Local Bus Time-out Enable Register	32	RW	0000 0000h
FFFB:A0EC	HostRevision	USB Host Controller Revision Register	32	R	–

Table 3–29. Camera Interface Registers

BYTE ADDRESS	REGISTER NAME	DESCRIPTION	ACCESS WIDTH	ACCESS TYPE	RESET VALUE
FFFB:6800	CTRLCLOCK	Clock Control Register	32	RW	0000 0000h
FFFB:6804	IT_STATUS	Interrupt Status Register	32	R	0000 0000h
FFFB:6808	MODE	Mode Configuration Register	32	RW	0000 0200h
FFFB:680C	STATUS	Status Register	32	R	0000 0000h
FFFB:6810	CAMDATA	Image Data Register	32	R	0000 0000h
FFFB:6814	GPIO	GPIO Register	32	RW	0000 0000h
FFFB:6818	PEAK_COUNTER	Fifo Peak Counter Register	32	RW	0000 0000h

Table 3–30. MPU I/O/Keyboard Registers

BYTE ADDRESS	REGISTER NAME	DESCRIPTION	ACCESS WIDTH	ACCESS TYPE	RESET VALUE
FFFB:5000	INPUT_LATCH	Input Register	16	R	undef
FFFB:5004	OUTPUT_REG	Output Register	16	RW	undef
FFFB:5008	IO_CNTL	Input Output Control Register	16	RW	FFFFh
FFFB:500C		Reserved			
FFFB:5010	KBR_LATCH	Keyboard Row Inputs Register	16	R	undef
FFFB:5014	KBC_REG	Keyboard Column Outputs Register	16	RW	0000h
FFFB:5018	GPIO_EVENT_MODE	GPIO Event Mode Register	16	RW	0000h
FFFB:501C	GPIO_INT_EDGE	GPIO Interrupt Edge Register	16	RW	0000h
FFFB:5020	KBD_INT	Keyboard Interrupt Register	16	R	0000h
FFFB:5024	GPIO_INT	GPIO Interrupt Register	16	R	0000h
FFFB:5028	KBD_MASKIT	Keyboard Mask Interrupt Register	16	RW	0000h
FFFB:502C	GPIO_MASKIT	GPIO Mask Interrupt Register	16	RW	0000h
FFFB:5030	GPIO_DEBOUNCING	GPIO Debouncing Register	16	RW	0000h
FFFB:5034	GPIO_LATCH	GPIO Latch Register	16	R	0000h

Table 3–31. PWL Registers

BYTE ADDRESS	REGISTER NAME	DESCRIPTION	ACCESS WIDTH	ACCESS TYPE	RESET VALUE
FFFB:5800	PWL_LEVEL	PWL Level Register	8	RW	0000h
FFFB:5804	PWL_CTRL	PWL Control Register	8	RW	0000h

Table 3–32. PWT Registers

BYTE ADDRESS	REGISTER NAME	DESCRIPTION	ACCESS WIDTH	ACCESS TYPE	RESET VALUE
FFFB:6000	PWT_FRC	PWT Frequency Control Register	8	RW	0000h
FFFB:6004	PWT_VCR	PWT Volume Control Register	8	RW	0000h
FFFB:6008	PWT_GCR	PWT General Control Register	8	RW	0000h

Table 3–33. LED Pulse Generator 1 Registers

BYTE ADDRESS	REGISTER NAME	DESCRIPTION	ACCESS WIDTH	ACCESS TYPE	RESET VALUE
FFFB:D000	LCR_1	LPG1 Control Register	8	RW	00h
FFFB:D004	PMR_1	LPG1 Power Management Register	8	RW	00h

Table 3–34. LED Pulse Generator 2 Registers

BYTE ADDRESS	REGISTER NAME	DESCRIPTION	ACCESS WIDTH	ACCESS TYPE	RESET VALUE
FFFB:D800	LCR_2	LPG2 Control Register	8	RW	00h
FFFB:D804	PMR_2	LPG2 Power Management Register	8	RW	00h

Table 3–35. 32k Timer Registers

BYTE ADDRESS	REGISTER NAME	DESCRIPTION	ACCESS WIDTH	ACCESS TYPE	RESET VALUE
FFFB:9000	TVR	Tick Value Register	32	RW	00FF FFFFh
FFFB:9004	TCR	Tick Counter Register	32	R	00FF FFFFh
FFFB:9008	CR	Control Register	32	RW	0000 0008h

Table 3–36. Real-Time Clock Registers

BYTE ADDRESS	REGISTER NAME	DESCRIPTION	ACCESS WIDTH	ACCESS TYPE	RESET VALUE
FFFB:4800	SECONDS_REG	RTC Seconds Register	8	RW	00h
FFFB:4804	MINUTES_REG	RTC Minutes Register	8	RW	00h
FFFB:4808	HOURS_REG	RTC Hours Register	8	RW	00h
FFFB:480C	DAYS_REG	RTC Days Register	8	RW	01h
FFFB:4810	MONTHS_REG	RTC Months Register	8	RW	01h
FFFB:4814	YEARS_REG	RTC Years Register	8	RW	00h
FFFB:4818	WEEK_REG	RTC Day of the Week Register	8	RW	00h
FFFB:481C		Reserved			
FFFB:4820	ALARM_SECOND_REG	RTC Alarm Seconds Register	8	RW	00h
FFFB:4824	ALARM_MINUTES_REG	RTC Alarm Minutes Register	8	RW	00h
FFFB:4828	ALARM_HOURS_REG	RTC Alarm Hours Register	8	RW	00h
FFFB:482C	ALARM_DAYS_REG	RTC Alarm Days Register	8	RW	01h
FFFB:4830	ALARM_MONTHS_REG	RTC Alarm Months Register	8	RW	01h
FFFB:4834	ALARM_YEARS_REG	RTC Alarm Years Register	8	RW	00h
FFFB:4838 – FFFB:483C		Reserved			
FFFB:4840	RTC_CTRL_REG	RTC Control Register	8	RW	00h
FFFB:4844	RTC_STATUS_REG	RTC Status Register	8	RW	00h
FFFB:4848	RTC_INTERRUPTS_REG	RTC Interrupts Register	8	RW	00h
FFFB:484C	RTC_COMP_LSB_REG	RTC Compensation LSB Register	8	RW	00h
FFFB:4850	RTC_COMP_MSB_REG	RTC Compensation MSB Register	8	RW	00h

Table 3–37. Frame Adjustment Counter Registers

BYTE ADDRESS	REGISTER NAME	DESCRIPTION	ACCESS WIDTH	ACCESS TYPE	RESET VALUE
FFFB:A800	FARC	Frame Adjustment Reference Count Register	16	RW	0000h
FFFB:A804	FSC	Frame Start Count Register	16	R	0000h
FFFB:A808	CTRL	Control and Configuration Register	16	RW	0000h
FFFB:A80C	STATUS	Status Register	16	R	0000h
FFFB:A810	SYNC_CNT	Frame Synchronization Register	16	R	undef
FFFB:A814	START_CNT	Frame Start Counter Register	16	R	undef

3.15.3 MPU Configuration Registers

The MPU Configuration Registers include the following:

- Pin Multiplexing Setup:
  - OMAP5910 Pin Configuration Registers
- Local Bus and MMU Setup:
  - Local Bus Control Registers
  - Local Bus MMU Registers
  - DSP MMU Registers
- MPUI and TIPB Setup:
  - MPU Interface (MPUI) Registers
  - TIPB (Private) Bridge 1 Configuration Registers
  - TIPB (Public) Bridge 2 Configuration Registers
  - MPU UART TI Peripheral Bus Switch Registers
  - Traffic Controller Registers
- Clock and Power Management:
  - MPU Clock/Reset/Power Mode Control Registers
  - DPLL1 Configuration Register
  - Ultra Low-Power Device Module Registers
- Device Identification:
  - Device Die Identification Registers
  - JTAG Identification Code Register

Table 3–38. OMAP 5910 Pin Configuration Registers

BYTE ADDRESS	REGISTER NAME	DESCRIPTION	ACCESS WIDTH	ACCESS TYPE	RESET VALUE
FFFE:1000	FUNC_MUX_CTRL_0	Functional Multiplexing Control 0 Register	32	RW	0000 0000h
FFFE:1004	FUNC_MUX_CTRL_1	Functional Multiplexing Control 1 Register	32	RW	0000 0000h
FFFE:1008	FUNC_MUX_CTRL_2	Functional Multiplexing Control 2 Register	32	RW	0000 0000h
FFFE:100C	COMP_MODE_CTRL_0	Compatibility Mode Control 0 Register	32	RW	0000 0000h
FFFE:1010	FUNC_MUX_CTRL_3	Functional Multiplexing Control 3 Register	32	RW	0000 0000h
FFFE:1014	FUNC_MUX_CTRL_4	Functional Multiplexing Control 4 Register	32	RW	0000 0000h
FFFE:1018	FUNC_MUX_CTRL_5	Functional Multiplexing Control 5 Register	32	RW	0000 0000h
FFFE:101C	FUNC_MUX_CTRL_6	Functional Multiplexing Control 6 Register	32	RW	0000 0000h
FFFE:1020	FUNC_MUX_CTRL_7	Functional Multiplexing Control 7 Register	32	RW	0000 0000h
FFFE:1024	FUNC_MUX_CTRL_8	Functional Multiplexing Control 8 Register	32	RW	0000 0000h
FFFE:1028	FUNC_MUX_CTRL_9	Functional Multiplexing Control 9 Register	32	RW	0000 0000h
FFFE:102C	FUNC_MUX_CTRL_A	Functional Multiplexing Control A Register	32	RW	0000 0000h
FFFE:1030	FUNC_MUX_CTRL_B	Functional Multiplexing Control B Register	32	RW	0000 0000h
FFFE:1034	FUNC_MUX_CTRL_C	Functional Multiplexing Control C Register	32	RW	0000 0000h
FFFE:1038	FUNC_MUX_CTRL_D	Functional Multiplexing Control D Register	32	RW	0000 0000h
FFFE:103C		Reserved			
FFFE:1040	PULL_DWN_CTRL_0	Pulldown Control 0 Register	32	RW	0000 0000h
FFFE:1044	PULL_DWN_CTRL_1	Pulldown Control 1 Register	32	RW	0000 0000h
FFFE:1048	PULL_DWN_CTRL_2	Pulldown Control 2 Register	32	RW	0000 0000h
FFFE:104C	PULL_DWN_CTRL_3	Pulldown Control 3 Register	32	RW	0000 0000h
FFFE:1050	GATE_INH_CTRL_0	Gate and Inhibit Control 0 Register	32	RW	0000 0000h
FFFE:1054 – FFFE:105C		Reserved			
FFFE:1060	VOLTAGE_CTRL_0	Voltage Control 0 Register	32	RW	0000 0000h
FFFE:1064 – FFFE:106C		Reserved			
FFFE:1070	TEST_DBG_CTRL_0	Test Debug Control 0 Register	32	RW	0000 0000h
FFFE:1074 – FFFE:107C		Reserved			
FFFE:1080	MOD_CONF_CTRL_0	Module Configuration Control 0 Register	32	RW	0000 0000h

Table 3–39. Local Bus Control Registers

BYTE ADDRESS	REGISTER NAME	DESCRIPTION	ACCESS WIDTH	ACCESS TYPE	RESET VALUE
FFFE:C100	LB_MPU_TIMEOUT	Local Bus MPU Access TIMEOUT	32	RW	0000 00FFh
FFFE:C104	LB_HOLD_TIMER	Local Bus Hold Timer	32	RW	0000 0000h
FFFE:C108	LB_PRIORITY_REG	Local Bus MPU Access Priority	32	RW	0000 0000h
FFFE:C10C	LB_CLOCK_DIV	Local Bus Clock Divider	32	RW	0000 00FCh
FFFE:C110	LB_ABORT_ADD	Local Bus Address Of Aborted MPU Cycle	32	R	FFFF FFFFh
FFFE:C114	LB_ABORT_DATA	Local Bus Cycle Data Of Aborted MPU Write Cycle	32	R	FFFF FFFFh
FFFE:C118	LB_ABORT_STATUS	Local Bus Cycle Type Of Aborted MPU Write Cycle	32	R	0000 0000h
FFFE:C11C	LB_IRQ_OUTPUT	LocaL Bus External Interrupt Output Control	32	RW	0000 0000h
FFFE:C120	LB_IRQ_INPUT	Local Bus External Interrupt Status	32	RW	0000 0000h

Table 3–40. Local Bus MMU Registers

BYTE ADDRESS	REGISTER NAME	DESCRIPTION	ACCESS WIDTH	ACCESS TYPE	RESET VALUE
FFFE:C204	LB_MMU_WALKING_ST_REG	Local Bus MMU Walking Status	32	RW†	0000h
FFFE:C208	LB_MMU_CNTL_REG	Local Bus MMU Control	32	RW†	0000h
FFFE:C20C	LB_MMU_FAULT_AD_H_REG	Local Bus MMU Fault Address High	32	R	0000h
FFFE:C210	LB_MMU_FAULT_AD_L_REG	Local Bus MMU Fault Address Low	32	R	0000h
FFFE:C214	LB_MMU_FAULT_ST_REG	Local Bus MMU Fault Status	32	R	0000h
FFFE:C218	LB_MMU_IT_ACK_REG	Local Bus MMU Interrupt Acknowledge	32	W	0000h
FFFE:C21C	LB_MMU_TTB_H_REG	Local Bus MMU TTB Register High	32	RW†	0000h
FFFE:C220	LB_MMU_TTB_L_REG	Local Bus MMU TTB Register Low	32	RW†	0000h
FFFE:C224	LB_MMU_LOCK_REG	Local Bus MMU Lock Counter	32	RW	0000h
FFFE:C228	LB_MMU_LD_TLB_REG	Local Bus MMU TLB Load/Read Control	32	RW	0000h
FFFE:C22C	LB_MMU_CAM_H_REG	Local Bus MMU CAM Entry High	32	RW	0000h
FFFE:C230	LB_MMU_CAM_L_REG	Local Bus MMU CAM Entry Low	32	RW	0000h
FFFE:C234	LB_MMU_RAM_H_REG	Local Bus MMU RAM Entry High	32	RW	0000h
FFFE:C238	LB_MMU_RAM_L_REG	Local Bus MMU RAM Entry Low	32	RW	0000h
FFFE:C23C	LB_MMU_GFLUSH_REG	Local Bus MMU Global Flush Control	32	RW	0000h
FFFE:C240	LB_MMU_FLUSH_ENTRY_REG	Local Bus MMU Individual Entry Flush Control	32	RW	0000h
FFFE:C244	LB_MMU_READ_CAM_H_REG	Local Bus MMU CAM Read High	32	RW	0000h
FFFE:C248	LB_MMU_READ_CAM_L_REG	Local Bus MMU CAM Read Low	32	RW	0000h
FFFE:C24C	LB_MMU_READ_RAM_H_REG	Local Bus MMU RAM Read High	32	RW	0000h
FFFE:C250	LB_MMU_READ_RAM_L_REG	Local Bus MMU RAM Read Low	32	RW	0000h

† Write access in ARM supervisor mode only.

Table 3–41. DSP MMU Registers

BYTE ADDRESS	REGISTER NAME	DESCRIPTION	ACCESS WIDTH	ACCESS TYPE	RESET VALUE
FFFE:D200	DSP_MMU_PREFETCH_REG	DSP MMU Prefetch Register	32	RW	0000h
FFFE:D204	DSP_MMU_WALKING_ST_REG	DSP MMU Prefetch Status Register	32	R	0000h
FFFE:D208	DSP_MMU_CNTL_REG	DSP MMU Control Register	32	RW	0000h
FFFE:D20C	DSP_MMU_FAULT_AD_H_REG	DSP MMU Fault Address Register MSB	32	R	0000h
FFFE:D210	DSP_MMU_FAULT_AD_L_REG	DSP MMU Fault Address Register LSB	32	R	0000h
FFFE:D214	DSP_MMU_F_ST_REG	DSP MMU Fault Status Register	32	R	0000h
FFFE:D218	DSP_MMU_IT_ACK_REG	DSP MMU IT Acknowledge Register	32	W	0000h
FFFE:D21C	DSP_MMU_TTB_H_REG	DSP MMU TTB Register MSB	32	RW	0000h
FFFE:D220	DSP_MMU_TTB_L_REG	DSP MMU TTB Register LSB	32	RW	0000h
FFFE:D224	DSP_MMU_LOCK_REG	DSP MMU Lock Counter Register	32	RW	0000h
FFFE:D228	DSP_MMU_LD_TLB_REG	DSP MMU Load Entry TLB Register	32	RW	0000h
FFFE:D22C	DSP_MMU_CAM_H_REG	DSP MMU CAM Entry Register MSB	32	RW	0000h
FFFE:D230	DSP_MMU_CAM_L_REG	DSP MMU CAM Entry Register LSB	32	RW	0000h
FFFE:D234	DSP_MMU_RAM_H_REG	DSP MMU RAM Entry Register MSB	32	RW	0000h
FFFE:D238	DSP_MMU_RAM_L_REG	DSP MMU RAM Entry Register LSB	32	RW	0000h
FFFE:D23C	DSP_MMU_GFLUSH_REG	DSP MMU Global Flush Register	32	RW	0000h
FFFE:D240	DSP_MMU_FLUSH_ENTRY_REG	DSP MMU Individual Flush Register	32	RW	0000h
FFFE:D244	DSP_MMU_READ_CAM_H_REG	DSP MMU Read CAM Register MSB	32	RW	0000h
FFFE:D248	DSP_MMU_READ_CAM_L_REG	DSP MMU Read CAM Register LSB	32	RW	0000h
FFFE:D24C	DSP_MMU_READ_RAM_H_REG	DSP MMU Read RAM Register MSB	32	RW	0000h
FFFE:D250	DSP_MMU_READ_RAM_L_REG	DSP MMU Read RAM Register LSB	32	RW	0000h

Table 3–42. MPUI Registers

BYTE ADDRESS	REGISTER NAME	DESCRIPTION	ACCESS WIDTH	ACCESS TYPE	RESET VALUE
FFFE:C900	CTRL_REG	MPUI Control Register	32	RW	0003 FF1Bh
FFFE:C904	DEBUG_ADDR	MPUI Debug Address Register	32	R	01FF FFFFh
FFFE:C908	DEBUG_DATA	MPUI Debug Data Register	32	R	FFFF FFFFh
FFFE:C90C	DEBUG_FLAG	MPUI Debug Flag Register	32	R	0800h
FFFE:C910	STATUS_REG	MPUI Status Register	32	R	0000h
FFFE:C914	DSP_STATUS_REG	MPUI DSP Status Register	32	R	undef
FFFE:C918	DSP_BOOT_CONFIG	MPUI Boot Configuration Register	32	RW	0000h
FFFE:C91C	DSP_MPUI_CONFIG	MPUI DSP MPUI Configuration Register	32	RW	FFFFh

Table 3–43. TIPB (Private) Bridge 1 Configuration Registers

BYTE ADDRESS	REGISTER NAME	DESCRIPTION	ACCESS WIDTH	ACCESS TYPE	RESET VALUE
FFFE:CA00	TIPB_CNTL	Private TIPB Control Register	32	RW	FF11h
FFFE:CA04	TIPB_BUS_ALLOC	Private TIPB Bus Allocation Register	32	RW	0009h
FFFE:CA08	MPU_TIPB_CNTL	Private MPU TIPB Control Register	32	RW	0000h
FFFE:CA0C	ENHANCED_TIPB_CNTL	Private Enhanced TIPB Control Register	32	RW	0007h
FFFE:CA10	ADDRESS_DBG	Private Debug Address Register	32	R	FFFFh
FFFE:CA14	DATA_DEBUG_LOW	Private Debug Data LSB Register	32	R	FFFFh
FFFE:CA18	DATA_DEBUG_HIGH	Private Debug Data MSB Register	32	R	FFFFh
FFFE:CA1C	DEBUG_CNTR_SIG	Private Debug Control Signals Register	32	R	00F8h

Table 3–44. TIPB (Public) Bridge 2 Configuration Registers

BYTE ADDRESS	REGISTER NAME	DESCRIPTION	ACCESS WIDTH	ACCESS TYPE	RESET VALUE
FFFE:D300	TIPB_CNTL	Public TIPB Control Register	16	RW	FF11h
FFFE:D304	TIPB_BUS_ALLOC	Public TIPB Bus Allocation Register	16	RW	0009h
FFFE:D308	MPU_TIPB_CNTL	Public MPU TIPB Control Register	16	RW	0000h
FFFE:D30C	ENHANCED_TIPB_CNTL	Public Enhanced TIPB Control Register	16	RW	0007h
FFFE:D310	ADDRESS_DBG	Public Debug Address Register	16	R	FFFFh
FFFE:D314	DATA_DEBUG_LOW	Public Debug Data LSB Register	16	R	FFFFh
FFFE:D318	DATA_DEBUG_HIGH	Public Debug Data MSB Register	16	R	FFFFh
FFFE:D31C	DEBUG_CNTR_SIG	Public Debug Control Signals Register	16	R	00F8h

Table 3–45. MPU UART TIPB Bus Switch Registers

BYTE ADDRESS	REGISTER NAME	DESCRIPTION	ACCESS WIDTH	ACCESS TYPE	RESET VALUE
FFFB:C800	RHSW_ARM_CNF1	UART1 TIPB Switch Configuration Register (MPU)	16	RW	0001h
FFFB:C804	RHSW_ARM_STA1	UART1 TIPB Switch Status Register (MPU)	16	R	0001h
FFFB:C808 – FFFB:C83C		Reserved			
FFFB:C840	RHSW_ARM_CNF2	UART2 TIPB Switch Configuration Register (MPU)	16	RW	0001h
FFFB:C844	RHSW_ARM_STA2	UART2 TIPB Switch Status Register (MPU)	16	R	0001h
FFFB:C848 – FFFB:C87C		Reserved			
FFFB:C880	RHSW_ARM_CNF3	UART3 TIPB Switch Configuration Register (MPU)	16	RW	0001h
FFFB:C884	RHSW_ARM_STA3	UART3 TIPB Switch Status Register (MPU)	16	R	0001h

Table 3–46. Traffic Controller Registers

BYTE ADDRESS	REGISTER NAME	DESCRIPTION	ACCESS WIDTH	ACCESS TYPE	RESET VALUE
FFFE:CC00	IMIF_PRIO	TC IMIF Priority Register	32	RW	0000 0000h
FFFE:CC04	EMIFS_PRIO_REG	TC EMIFS Priority Register	32	RW	0000 0000h
FFFE:CC08	EMIFF_PRIO_REG	TC EMIFF Priority Register	32	RW	0000 0000h
FFFE:CC0C	EMIFS_CONFIG_REG	TC EMIFS Configuration Register	32	RW	y00z0b†
FFFE:CC10	EMIFS_CS0_CONFIG	TC EMIFS CS0 Configuration Register	32	RW	0010 FFFBh
FFFE:CC14	EMIFS_CS1_CONFIG	TC EMIFS CS1 Configuration Register	32	RW	0010 FFFBh
FFFE:CC18	EMIFS_CS2_CONFIG	TC EMIFS CS2 Configuration Register	32	RW	0010 FFFBh
FFFE:CC1C	EMIFS_CS3_CONFIG	TC EMIFS CS3 Configuration Register	32	RW	0010 FFFBh
FFFE:CC20	EMIFF_SDRAM_CONFIG	TC EMIFF SDRAM Configuration Register	32	RW	0061 8800h
FFFE:CC24	EMIFF_MRS	TC EMIFF SDRAM MRS Register	32	RW	0000 0037h
FFFE:CC28	TIMEOUT1	TC Timeout 1 Register	32	RW	0000 0000h
FFFE:CC2C	TIMEOUT2	TC Timeout 2 Register	32	RW	0000 0000h
FFFE:CC30	TIMEOUT3	TC Timeout 3 Register	32	RW	0000 0000h
FFFE:CC34	ENDIANISM	TC Endianism Register	32	RW	0000 0000h
FFFE:CC38		Reserved	32	RW	0000 0000h
FFFE:CC3C	EMIFF_SDRAM_CONFIG_2	TC EMIFF SDRAM Configuration Register 2	32	RW	0000 0003h
FFFE:CC40	EMIFS_CFG_DYN_WAIT	TC EMIFS Wait-State Configuration Register	32	RW	0000 0000h

† The value of y is dependent upon the state of the FLASH.RDY pin and the value of z is dependent upon the state of the MPU_BOOT pin upon power-on reset.

Table 3–47. MPU Clock/Reset/Power Mode Control Registers

BYTE ADDRESS	REGISTER NAME	DESCRIPTION	ACCESS WIDTH	ACCESS TYPE	RESET VALUE
FFFE:CE00	ARM_CKCTL	MPU Clock Control Register	32	RW	3000h
FFFE:CE04	ARM_IDLECT1	MPU Idle Control 1 Register	32	RW	0400h
FFFE:CE08	ARM_IDLECT2	MPU Idle Control 2 Register	32	RW	0100h
FFFE:CE0C	ARM_EWUPCT	MPU External Wakeup Control Register	32	RW	003Fh
FFFE:CE10	ARM_RSTCT1	MPU Reset Control 1 Register	32	RW	0000h
FFFE:CE14	ARM_RSTCT2	MPU Reset Control 2 Register	32	RW	0000h
FFFE:CE18	ARM_SYSST	MPU System Status Register	32	RW	0038h

Table 3–48. DPLL1 Register

BYTE ADDRESS	REGISTER NAME	DESCRIPTION	ACCESS WIDTH	ACCESS TYPE	RESET VALUE
FFFE:CF00	DPLL1_CTL_REG	DPLL1 Control Register	32	RW	0000 2002h

Table 3–49. Ultra Low-Power Device Module Registers

BYTE ADDRESS	REGISTER NAME	DESCRIPTION	ACCESS WIDTH	ACCESS TYPE	RESET VALUE
FFFE:0800	COUNTER_32_LSB	ULPD 32-kHz Counter Register LSB	16	R	0001h
FFFE:0804	COUNTER_32_MSB	ULPD 32-kHz Counter Register MSB	16	R	0001h
FFFE:0808	COUNTER_HIGH_FREQ_LSB	ULPD High-Frequency Counter LSB Register	16	R	0001h
FFFE:080C	COUNTER_HIGH_FREQ_MSB	ULPD High-Frequency Counter MSB Register	16	R	0000h
FFFE:0810	GAUGING_CTRL_REG	ULPD Gauging Control Register	16	RW	0000h
FFFE:0814	IT_STATUS_REG	ULPD Interrupt Status Register	16	R	0000h
FFFE:0818 – FFFE:0820		Reserved			
FFFE:0824	SETUP_ULPD1_REG	ULPD Wakeup Time Setup Register	16	RW	03FFh
FFFE:0828 – FFFE:082C		Reserved			
FFFE:0830	CLOCK_CTRL_REG	ULPD Clock Control Register	16	RW	0000h
FFFE:0834	SOFT_REQ_REG	ULPD Soft Clock Request Register	16	RW	0000h
FFFE:0838	COUNTER_32_FIQ_REG	ULPD Modem Shutdown Delay Register	16	RW	0001h
FFFE:083C	DPLL_CTRL_REG	ULPD USB DPLL Control Register	16	RW	2211h
FFFE:0840	STATUS_REQ_REG	ULPD Hardware Request Status Register	16	RW	undef
FFFE:0844		Reserved			
FFFE:0848	LOCK_TIME_REG	ULPD APLL Lock Time Register	16	RW	0960h
FFFE:084C	APLL_CTRL_REG	ULPD APLL Control Register	16	RW	undef
FFFE:0850	POWER_CTRL_REG	ULPD Power Control Register	16	RW	0008h

Table 3–50. Device Die Identification Registers

BYTE ADDRESS	REGISTER NAME	DESCRIPTION	ACCESS WIDTH	ACCESS TYPE	RESET VALUE
FFFE:1800	DIE_ID_LSB	Device Die Identification Register (LSB)	32	R	–
FFFE:1804	DIE_ID_MSB	Device Die Identification Register (MSB)	32	R	–

Table 3–51. JTAG Identification Code Register

BYTE ADDRESS	REGISTER NAME	DESCRIPTION	ACCESS WIDTH	ACCESS TYPE	RESET VALUE
FFFE:D404	JTAG_ID	JTAG Identification Code Register	32	R	–

3.16 DSP Register Descriptions

The following tables describe the DSP registers including register addresses, descriptions, required access widths, access types (R-read, W-write, RW-read/write) and reset values. These tables are organized by function with like peripherals or functions together and are therefore not necessarily in the order of ascending register addresses.

NOTE: All accesses to these registers must be of the data access widths indicated to avoid a TIPB bus error condition and a corresponding interrupt. Reserved addresses should never be accessed

3.16.1 DSP Private Peripheral Registers

The DSP private peripheral registers include the following:

- DMA Controller:
  - DSP DMA Controller Registers
- Timers:
  - DSP Timer 1 Registers
  - DSP Timer 2 Registers
  - DSP Timer 3 Registers
  - DSP Watchdog Timer Registers
- Interrupt Control:
  - DSP Interrupt Interface Registers
  - DSP Level 2 Interrupt Handler Registers

Table 3–52. DSP DMA Controller Registers

DSP WORD ADDRESS	REGISTER NAME	DESCRIPTION	ACCESS WIDTH	ACCESS TYPE	RESET VALUE
0x00 0C00h	DMA_CSDP0	Channel 0 Source/Destination Parameters Register	16	RW	0000h
0x00 0C01h	DMA_CCR0	Channel 0 Control Register	16	RW	0000h
0x00 0C02h	DMA_CICR0	Channel 0 Interrupt Control Register	16	RW	0003h
0x00 0C03h	DMA_CSR0	Channel 0 Status Register	16	R	0000h
0x00 0C04h	DMA_CSSA_L0	Channel 0 Source Start Address Register LSB	16	RW	undef
0x00 0C05h	DMA_CSSA_U0	Channel 0 Source Start Address Register MSB	16	RW	undef
0x00 0C06h	DMA_CDSA_L0	Channel 0 Destination Start Address Register LSB	16	RW	undef
0x00 0C07h	DMA_CDSA_U0	Channel 0 Destination Start Address Register MSB	16	RW	undef
0x00 0C08h	DMA_CEN0	Channel 0 Element Number Register	16	RW	undef
0x00 0C09h	DMA_CFN0	Channel 0 Frame Number Register	16	RW	undef
0x00 0C0Ah	DMA_CSFI0	Channel 0 Frame Index Register	16	RW	undef
0x00 0C0Bh	DMA_CSEI0	Channel 0 Element Index Register	16	RW	undef
0x00 0C0Ch	DMA_CSAC0	Channel 0 Source Address Counter Register	16	RW	undef
0x00 0C0Dh	DMA_CDAC0	Channel 0 Destination Address Counter Register	16	RW	undef
0x00 0C0Eh	DMA_CDFI0	Channel 0 Destination Frame Index	16	RW	undef
0x00 0C0Fh	DMA_CDEI0	Channel 0 Destination Element Index	16	RW	undef
0x00 0C10h – 0x00 0C1Fh		Reserved			
0x00 0C20h	DMA_CSDP1	Channel 1 Source/Destination Parameters Register	16	RW	0000h
0x00 0C21h	DMA_CCR1	Channel 1 Control Register	16	RW	0000h
0x00 0C22h	DMA_CICR1	Channel 1 Interrupt Control Register	16	RW	0003h
0x00 0C23h	DMA_CSR1	Channel 1 Status Register	16	R	0000h
0x00 0C24h	DMA_CSSA_L1	Channel 1 Source Start Address Register LSB	16	RW	undef
0x00 0C25h	DMA_CSSA_U1	Channel 1 Source Start Address Register MSB	16	RW	undef
0x00 0C26h	DMA_CDSA_L1	Channel 1 Destination Start Address Register LSB	16	RW	undef
0x00 0C27h	DMA_CDSA_U1	Channel 1 Destination Start Address Register MSB	16	RW	undef
0x00 0C28h	DMA_CEN1	Channel 1 Element Number Register	16	RW	undef
0x00 0C29h	DMA_CFN1	Channel 1 Frame Number Register	16	RW	undef
0x00 0C2Ah	DMA_CSFI1	Channel 1 Frame Index Register	16	RW	undef
0x00 0C2Bh	DMA_CSEI1	Channel 1 Element Index Register	16	RW	undef
0x00 0C2Ch	DMA_CSAC1	Channel 1 Source Address Counter Register	16	RW	undef
0x00 0C2Dh	DMA_CDAC1	Channel 1 Destination Address Counter Register	16	RW	undef
0x00 0C2Eh	DMA_CDFI1	Channel 1 Destination Frame Index	16	RW	undef
0x00 0C2Fh	DMA_CDEI1	Channel 1 Destination Element Index	16	RW	undef
0x00 0C30h – 0x00 0C3Fh		Reserved			
0x00 0C40h	DMA_CSDP2	Channel 2 Source/Destination Parameters Register	16	RW	0000h
0x00 0C41h	DMA_CCR2	Channel 2 Control Register	16	RW	0000h
0x00 0C42h	DMA_CICR2	Channel 2 Interrupt Control Register	16	RW	0003h
0x00 0C43h	DMA_CSR2	Channel 2 Status Register	16	R	0000h
0x00 0C44h	DMA_CSSA_L2	Channel 2 Source Start Address Register LSB	16	RW	undef
0x00 0C45h	DMA_CSSA_U2	Channel 2 Source Start Address Register MSB	16	RW	undef
0x00 0C46h	DMA_CDSA_L2	Channel 2 Destination Start Address Register LSB	16	RW	undef
0x00 0C47h	DMA_CDSA_U2	Channel 2 Destination Start Address Register MSB	16	RW	undef

Table 3–52. DSP DMA Controller Registers (Continued)

DSP WORD ADDRESS	REGISTER NAME	DESCRIPTION	ACCESS WIDTH	ACCESS TYPE	RESET VALUE
0x00 0C48h	DMA_CEN2	Channel 2 Element Number Register	16	RW	undef
0x00 0C49h	DMA_CFN2	Channel 2 Frame Number Register	16	RW	undef
0x00 0C4Ah	DMA_CSFI2	Channel 2 Frame Index Register	16	RW	undef
0x00 0C4Bh	DMA_CSEI2	Channel 2 Element Index Register	16	RW	undef
0x00 0C4Ch	DMA_CSAC2	Channel 2 Source Address Counter Register	16	RW	undef
0x00 0C4Dh	DMA_CDAC2	Channel 2 Destination Address Counter Register	16	RW	undef
0x00 0C4Eh	DMA_CDFI2	Channel 2 Destination Frame Index	16	RW	undef
0x00 0C4Fh	DMA_CDEI2	Channel 2 Destination Element Index	16	RW	undef
0x00 0C50h – 0x00 0C5Fh		Reserved			
0x00 0C60h	DMA_CSDP3	Channel 3 Source/Destination Parameters Register	16	RW	0000h
0x00 0C61h	DMA_CCR3	Channel 3 Control Register	16	RW	0000h
0x00 0C62h	DMA_CICR3	Channel 3 Interrupt Control Register	16	RW	0003h
0x00 0C63h	DMA_CSR3	Channel 3 Status Register	16	R	0000h
0x00 0C64h	DMA_CSSA_L3	Channel 3 Source Start Address Register LSB	16	RW	undef
0x00 0C65h	DMA_CSSA_U3	Channel 3 Source Start Address Register MSB	16	RW	undef
0x00 0C66h	DMA_CDSA_L3	Channel 3 Destination Start Address Register LSB	16	RW	undef
0x00 0C67h	DMA_CDSA_U3	Channel 3 Destination Start Address Register MSB	16	RW	undef
0x00 0C68h	DMA_CEN3	Channel 3 Element Number Register	16	RW	undef
0x00 0C69h	DMA_CFN3	Channel 3 Frame Number Register	16	RW	undef
0x00 0C6Ah	DMA_CSFI3	Channel 3 Frame Index Register	16	RW	undef
0x00 0C6Bh	DMA_CSEI3	Channel 3 Element Index Register	16	RW	undef
0x00 0C6Ch	DMA_CSAC3	Channel 3 Source Address Counter Register	16	RW	undef
0x00 0C6Dh	DMA_CDAC3	Channel 3 Destination Address Counter Register	16	RW	undef
0x00 0C6Eh	DMA_CDFI3	Channel 3 Destination Frame Index	16	RW	undef
0x00 0C6Fh	DMA_CDEI3	Channel 3 Destination Element Index	16	RW	undef
0x00 0C70h – 0x00 0C7Fh		Reserved			
0x00 0C80h	DMA_CSDP4	Channel 4 Source/Destination Parameters Register	16	RW	0000h
0x00 0C81h	DMA_CCR4	Channel 4 Control Register	16	RW	0000h
0x00 0C82h	DMA_CICR4	Channel 4 Interrupt Control Register	16	RW	0003h
0x00 0C83h	DMA_CSR4	Channel 4 Status Register	16	R	0000h
0x00 0C84h	DMA_CSSA_L4	Channel 4 Source Start Address Register LSB	16	RW	undef
0x00 0C85h	DMA_CSSA_U4	Channel 4 Source Start Address Register MSB	16	RW	undef
0x00 0C86h	DMA_CDSA_L4	Channel 4 Destination Start Address Register LSB	16	RW	undef
0x00 0C87h	DMA_CDSA_U4	Channel 4 Destination Start Address Register MSB	16	RW	undef
0x00 0C88h	DMA_CEN4	Channel 4 Element Number Register	16	RW	undef
0x00 0C89h	DMA_CFN4	Channel 4 Frame Number Register	16	RW	undef
0x00 0C8Ah	DMA_CSFI4	Channel 4 Frame Index Register	16	RW	undef
0x00 0C8Bh	DMA_CSEI4	Channel 4 Element Index Register	16	RW	undef
0x00 0C8Ch	DMA_CSAC4	Channel 4 Source Address Counter Register	16	RW	undef
0x00 0C8Dh	DMA_CDAC4	Channel 4 Destination Address Counter Register	16	RW	undef
0x00 0C8Eh	DMA_CDFI4	Channel 4 Destination Frame Index	16	RW	undef
0x00 0C8Fh	DMA_CDEI4	Channel 4 Destination Element Index	16	RW	undef

Table 3–52. DSP DMA Controller Registers (Continued)

DSP WORD ADDRESS	REGISTER NAME	DESCRIPTION	ACCESS WIDTH	ACCESS TYPE	RESET VALUE
0x00 0C90h – 0x00 0C9Fh		Reserved			
0x00 0CA0h	DMA_CSDP5	Channel 5 Source/Destination Parameters Register	16	RW	0000h
0x00 0CA1h	DMA_CCR5	Channel 5 Control Register	16	RW	0000h
0x00 0CA2h	DMA_CICR5	Channel 5 Interrupt Control Register	16	RW	0003h
0x00 0CA3h	DMA_CSR5	Channel 5 Status Register	16	R	0000h
0x00 0CA4h	DMA_CSSA_L5	Channel 5 Source Start Address Register LSB	16	RW	undef
0x00 0CA5h	DMA_CSSA_U5	Channel 5 Source Start Address Register MSB	16	RW	undef
0x00 0CA6h	DMA_CDSA_L5	Channel 5 Destination Start Address Register LSB	16	RW	undef
0x00 0CA7h	DMA_CDSA_U5	Channel 5 Destination Start Address Register MSB	16	RW	undef
0x00 0CA8h	DMA_CEN5	Channel 5 Element Number Register	16	RW	undef
0x00 0CA9h	DMA_CFN5	Channel 5 Frame Number Register	16	RW	undef
0x00 0CAAh	DMA_CSFI5	Channel 5 Frame Index Register	16	RW	undef
0x00 0CABh	DMA_CSEI5	Channel 5 Element Index Register	16	RW	undef
0x00 0CACh	DMA_CSAC5	Channel 5 Source Address Counter Register	16	RW	undef
0x00 0CADh	DMA_CDAC5	Channel 5 Destination Address Counter Register	16	RW	undef
0x00 0CAEh	DMA_CDFI5	Channel 5 Destination Frame Index	16	RW	undef
0x00 0CAFh	DMA_CDEI5	Channel 5 Destination Element Index	16	RW	undef
0x00 0CB0h – 0x00 0DFFh		Reserved			
0x00 0E00h	DMA_GCR	Global Control Register	16	RW	0008h
0x00 0E01h	DMA_GTCR	Global Timeout Control Register	16	RW	0000h
0x00 0E02h	DMA_GSCR	Global Software Incompatible Control Register	16	RW	0000h

Table 3–53. DSP Timer 1 Registers

DSP WORD ADDRESS	REGISTER NAME	DESCRIPTION	ACCESS WIDTH	ACCESS TYPE	RESET VALUE
0x00 2800h	DSP_CNTL_TIMER_1	DSP Timer 1 Control Timer Register	16	RW	0000h
0x00 2801h		Reserved			
0x00 2802h	DSP_LOAD_TIM_HI_1	DSP Timer 1 Load Timer High Register	16	W	undef
0x00 2803h	DSP_LOAD_TIM_LO_1	DSP Timer 1 Load Timer Low Register	16	W	undef
0x00 2804h	DSP_READ_TIM_HI_1	DSP Timer 1 Read Timer High Register	16	R	undef
0x00 2805h	DSP_READ_TIM_LO_1	DSP Timer 1 Read Timer Low Register	16	R	undef

Table 3–54. DSP Timer 2 Registers

DSP WORD ADDRESS	REGISTER NAME	DESCRIPTION	ACCESS WIDTH	ACCESS TYPE	RESET VALUE
0x00 2C00h	DSP_CNTL_TIMER_2	DSP Timer 2 Control Timer Register	16	RW	0000h
0x00 2C01h		Reserved			
0x00 2C02h	DSP_LOAD_TIM_HI_2	DSP Timer 2 Load Timer High Register	16	W	undef
0x00 2C03h	DSP_LOAD_TIM_LO_2	DSP Timer 2 Load Timer Low Register	16	W	undef
0x00 2C04h	DSP_READ_TIM_HI_2	DSP Timer 2 Read Timer High Register	16	R	undef
0x00 2C05h	DSP_READ_TIM_LO_2	DSP Timer 2 Read Timer Low Register	16	R	undef

Table 3–55. DSP Timer 3 Registers

DSP WORD ADDRESS	REGISTER NAME	DESCRIPTION	ACCESS WIDTH	ACCESS TYPE	RESET VALUE
0x00 3000h	DSP_CNTL_TIMER_3	DSP Timer 3 Control Timer Register	16	RW	0000h
0x00 3001h		Reserved			
0x00 3002h	DSP_LOAD_TIM_HI_3	DSP Timer 3 Load Timer High Register	16	W	undef
0x00 3003h	DSP_LOAD_TIM_LO_3	DSP Timer 3 Load Timer Low Register	16	W	undef
0x00 3004h	DSP_READ_TIM_HI_3	DSP Timer 3 Read Timer High Register	16	R	undef
0x00 3005h	DSP_READ_TIM_LO_3	DSP Timer 3 Read Timer Low Register	16	R	undef

Table 3–56. DSP Watchdog Timer Registers

DSP WORD ADDRESS	REGISTER NAME	DESCRIPTION	ACCESS WIDTH	ACCESS TYPE	RESET VALUE
0x00 3400h	DSP_CNTL_TIMER_WD	DSP WDT Control Timer Register	16	RW	0002h
0x00 3401h		Reserved			
0x00 3402h	DSP_LOAD_TIM_WD	DSP WDT Load Timer Register	16	W	FFFFh
0x00 3402h	DSP_READ_TIM_WD	DSP WDT Read Timer Register	16	R	FFFFh
0x00 3403h		Reserved			
0x00 3404h	DSP_TIMER_MODE_WD	DSP WDT Timer Mode Register	16	RW	8000h

Table 3–57. DSP Interrupt Interface Registers

DSP WORD ADDRESS	REGISTER NAME	DESCRIPTION	ACCESS WIDTH	ACCESS TYPE	RESET VALUE
0x00 3800h	ET_LS_CTRL_HI	Edge Triggered/Level Sensitive Control Register High	16	RW	0000h
0x00 3801h	ET_LS_CTRL_LO	Edge Triggered/Level Sensitive Control Register Low	16	RW	0000h
0x00 3802h	RST_LVL_LO	Level Sensitive Clear Low Register	16	W	0000h
0x00 3803h	RST_LVL_HI	Level Sensitive Clear High Register	16	W	0000h

Table 3–58. DSP Level 2 Interrupt Handler Registers

DSP WORD ADDRESS	REGISTER NAME	DESCRIPTION	ACCESS WIDTH	ACCESS TYPE	RESET VALUE
0x00 4800h	DSP_L2_ITR	Interrupt Register	16	RW	0000h
0x00 4802h	DSP_L2_MIR	Mask Interrupt Register	16	RW	FFFFh
0x00 4804h	DSP_L2_SIR_IRQ_CODE	IRQ Interrupt Encoded Source Register	16	R	0000h
0x00 4806h	DSP_L2_SIR_FIQ_CODE	FIQ Interrupt Encoded Source Register	16	R	0000h
0x00 4808h	DSP_L2_CONTROL_REG	Interrupt Control Register	16	RW	0000h
0x00 480Ah	DSP_L2_ISR	Software Interrupt Set Register	16	RW	0000h
0x00 480Ch	DSP_L2_ILR0	Interrupt 0 Priority Level Register	16	RW	0000h
0x00 480Eh	DSP_L2_ILR1	Interrupt 1 Priority Level Register	16	RW	0000h
0x00 4810h	DSP_L2_ILR2	Interrupt 2 Priority Level Register	16	RW	0000h
0x00 4812h	DSP_L2_ILR3	Interrupt 3 Priority Level Register	16	RW	0000h
0x00 4814h	DSP_L2_ILR4	Interrupt 4 Priority Level Register	16	RW	0000h
0x00 4816h	DSP_L2_ILR5	Interrupt 5 Priority Level Register	16	RW	0000h
0x00 4818h	DSP_L2_ILR6	Interrupt 6 Priority Level Register	16	RW	0000h
0x00 481Ah	DSP_L2_ILR7	Interrupt 7 Priority Level Register	16	RW	0000h
0x00 481Ch	DSP_L2_ILR8	Interrupt 8 Priority Level Register	16	RW	0000h
0x00 481Eh	DSP_L2_ILR9	Interrupt 9 Priority Level Register	16	RW	0000h
0x00 4820h	DSP_L2_ILR10	Interrupt 10 Priority Level Register	16	RW	0000h
0x00 4822h	DSP_L2_ILR11	Interrupt 11 Priority Level Register	16	RW	0000h
0x00 4824h	DSP_L2_ILR12	Interrupt 12 Priority Level Register	16	RW	0000h
0x00 4826h	DSP_L2_ILR13	Interrupt 13 Priority Level Register	16	RW	0000h
0x00 4828h	DSP_L2_ILR14	Interrupt 14 Priority Level Register	16	RW	0000h
0x00 482Ah	DSP_L2_ILR15	Interrupt 15 Priority Level Register	16	RW	0000h

3.16.2 DSP Public Peripheral Registers

The DSP public peripheral registers include the following:

- Serial Ports:
  - McBSP1 Registers
  - McBSP3 Registers
  - MCSI1 Registers
  - MCSI2 Registers

Table 3–59. McBSP1 Registers

DSP WORD ADDRESS	MPU BYTE ADDRESS (VIA MPUI)	REGISTER NAME	DESCRIPTION	ACCESS WIDTH	ACCESS TYPE	RESET VALUE
0x00 8C00h	E101:1800	MCBSP1_DRR2	McBSP1 Data Receive Register 2	16	RW	0000h
0x00 8C01h	E101:1802	MCBSP1_DRR1	McBSP1 Data Receive Register 1	16	RW	0000h
0x00 8C02h	E101:1804	MCBSP1_DXR2	McBSP1 Data Transmit Register 2	16	RW	0000h
0x00 8C03h	E101:1806	MCBSP1_DXR1	McBSP1 Data Transmit Register 1	16	RW	0000h
0x00 8C04h	E101:1808	MCBSP1_SPCR2	McBSP1 Serial Port Control Register 2	16	RW	0000h
0x00 8C05h	E101:180A	MCBSP1_SPCR1	McBSP1 Serial Port Control Register 1	16	RW	0000h
0x00 8C06h	E101:180C	MCBSP1_RCR2	McBSP1 Receive Control Register 2	16	RW	0000h
0x00 8C07h	E101:180E	MCBSP1_RCR1	McBSP1 Receive Control Register 1	16	RW	0000h
0x00 8C08h	E101:1810	MCBSP1_XCR2	McBSP1 Transmit Control Register 2	16	RW	0000h
0x00 8C09h	E101:1812	MCBSP1_XCR1	McBSP1 Transmit Control Register 1	16	RW	0000h
0x00 8C0Ah	E101:1814	MCBSP1_SRGR2	McBSP1 Sample Rate Generator Register 2	16	RW	2000h
0x00 8C0Bh	E101:1816	MCBSP1_SRGR1	McBSP1 Sample Rate Generator Register 1	16	RW	0001h
0x00 8C0Ch	E101:1818	MCBSP1_MCR2	McBSP1 Multichannel Control Register 2	16	RW	0000h
0x00 8C0Dh	E101:181A	MCBSP1_MCR1	McBSP1 Multichannel Control Register 1	16	RW	0000h
0x00 8C0Eh	E101:181C	MCBSP1_RCERA	McBSP1 Receive Channel Enable Register Partition A	16	RW	0000h
0x00 8C0Fh	E101:181E	MCBSP1_RCERB	McBSP1 Receive Channel Enable Register Partition B	16	RW	0000h
0x00 8C10h	E101:1820	MCBSP1_XCERA	McBSP1 Transmit Channel Enable Register Partition A	16	RW	0000h
0x00 8C11h	E101:1822	MCBSP1_XCERB	McBSP1 Transmit Channel Enable Register Partition B	16	RW	0000h
0x00 8C12h	E101:1824	MCBSP1_PCR0	McBSP1 Pin Control Register 0	16	RW	0000h
0x00 8C13h	E101:1826	MCBSP1_RCERC	McBSP1 Receive Channel Enable Register Partition C	16	RW	0000h
0x00 8C14h	E101:1828	MCBSP1_RCERD	McBSP1 Receive Channel Enable Register Partition D	16	RW	0000h
0x00 8C15h	E101:182A	MCBSP1_XCERC	McBSP1 Transmit Channel Enable Register Partition C	16	RW	0000h
0x00 8C16h	E101:182C	MCBSP1_XCERD	McBSP1 Transmit Channel Enable Register Partition D	16	RW	0000h
0x00 8C17h	E101:182E	MCBSP1_RCERE	McBSP1 Receive Channel Enable Register Partition E	16	RW	0000h
0x00 8C18h	E101:1830	MCBSP1_RCERF	McBSP1 Receive Channel Enable Register Partition F	16	RW	0000h
0x00 8C19h	E101:1832	MCBSP1_XCERE	McBSP1 Transmit Channel Enable Register Partition E	16	RW	0000h
0x00 8C1Ah	E101:1834	MCBSP1_XCERF	McBSP1 Transmit Channel Enable Register Partition F	16	RW	0000h

Table 3–59. McBSP1 Registers (Continued)

DSP WORD ADDRESS	MPU BYTE ADDRESS (VIA MPUI)	REGISTER NAME	DESCRIPTION	ACCESS WIDTH	ACCESS TYPE	RESET VALUE
0x00 8C1Bh	E101:1836	MCBSP1_RCERG	McBSP1 Receive Channel Enable Register Partition G	16	RW	0000h
0x00 8C1Ch	E101:1838	MCBSP1_RCERH	McBSP1 Receive Channel Enable Register Partition H	16	RW	0000h
0x00 8C1Dh	E101:183A	MCBSP1_XCERG	McBSP1 Transmit Channel Enable Register Partition G	16	RW	0000h
0x00 8C1Eh	E101:183C	MCBSP1_XCERH	McBSP1 Transmit Channel Enable Register Partition H	16	RW	0000h

Table 3–60. McBSP3 Registers

DSP WORD ADDRESS	MPU BYTE ADDRESS (VIA MPUI)	REGISTER NAME	DESCRIPTION	ACCESS WIDTH	ACCESS TYPE	RESET VALUE
0x00 B800h	E101:7000	MCBSP3_DRR2	McBSP3 Data Receive Register 2	16	RW	0000h
0x00 B801h	E101:7002	MCBSP3_DRR1	McBSP3 Data Receive Register 1	16	RW	0000h
0x00 B802h	E101:7004	MCBSP3_DXR2	McBSP3 Data Transmit Register 2	16	RW	0000h
0x00 B803h	E101:7006	MCBSP3_DXR1	McBSP3 Data Transmit Register 1	16	RW	0000h
0x00 B804h	E101:7008	MCBSP3_SPCR2	McBSP3 Serial Port Control Register 2	16	RW	0000h
0x00 B805h	E101:700A	MCBSP3_SPCR1	McBSP3 Serial Port Control Register 1	16	RW	0000h
0x00 B806h	E101:700C	MCBSP3_RCR2	McBSP3 Receive Control Register 2	16	RW	0000h
0x00 B807h	E101:700E	MCBSP3_RCR1	McBSP3 Receive Control Register 1	16	RW	0000h
0x00 B808h	E101:7010	MCBSP3_XCR2	McBSP3 Transmit Control Register 2	16	RW	0000h
0x00 B809h	E101:7012	MCBSP3_XCR1	McBSP3 Transmit Control Register 1	16	RW	0000h
0x00 B80Ah	E101:7014	MCBSP3_SRGR2	McBSP3 Sample Rate Generator Register 2	16	RW	2000h
0x00 B80Bh	E101:7016	MCBSP3_SRGR1	McBSP3 Sample Rate Generator Register 1	16	RW	0001h
0x00 B80Ch	E101:7018	MCBSP3_MCR2	McBSP3 Multichannel Control Register 2	16	RW	0000h
0x00 B80Dh	E101:701A	MCBSP3_MCR1	McBSP3 Multichannel Control Register 1	16	RW	0000h
0x00 B80Eh	E101:701C	MCBSP3_RCERA	McBSP3 Receive Channel Enable Register Partition A	16	RW	0000h
0x00 B80Fh	E101:701E	MCBSP3_RCERB	McBSP3 Receive Channel Enable Register Partition B	16	RW	0000h
0x00 B810h	E101:7020	MCBSP3_XCERA	McBSP3 Transmit Channel Enable Register Partition A	16	RW	0000h
0x00 B811h	E101:7022	MCBSP3_XCERB	McBSP3 Transmit Channel Enable Register Partition B	16	RW	0000h
0x00 B812h	E101:7024	MCBSP3_PCR0	McBSP3 Pin Control Register 0	16	RW	0000h
0x00 B813h	E101:7026	MCBSP3_RCERC	McBSP3 Receive Channel Enable Register Partition C	16	RW	0000h
0x00 B814h	E101:7028	MCBSP3_RCERD	McBSP3 Receive Channel Enable Register Partition D	16	RW	0000h
0x00 B815h	E101:702A	MCBSP3_XCERC	McBSP3 Transmit Channel Enable Register Partition C	16	RW	0000h
0x00 B816h	E101:702C	MCBSP3_XCERD	McBSP3 Transmit Channel Enable Register Partition D	16	RW	0000h
0x00 B817h	E101:702E	MCBSP3_RCERE	McBSP3 Receive Channel Enable Register Partition E	16	RW	0000h
0x00 B818h	E101:7030	MCBSP3_RCERF	McBSP3 Receive Channel Enable Register Partition F	16	RW	0000h

Table 3–60. McBSP3 Registers (Continued)

DSP WORD ADDRESS	MPU BYTE ADDRESS (VIA MPUI)	REGISTER NAME	DESCRIPTION	ACCESS WIDTH	ACCESS TYPE	RESET VALUE
0x00 B819h	E101:7032	MCBSP3_XCERE	McBSP3 Transmit Channel Enable Register Partition E	16	RW	0000h
0x00 B81Ah	E101:7034	MCBSP3_XCERF	McBSP3 Transmit Channel Enable Register Partition F	16	RW	0000h
0x00 B81Bh	E101:7036	MCBSP3_RCERG	McBSP3 Receive Channel Enable Register Partition G	16	RW	0000h
0x00 B81Ch	E101:7038	MCBSP3_RCERH	McBSP3 Receive Channel Enable Register Partition H	16	RW	0000h
0x00 B81Dh	E101:703A	MCBSP3_XCERG	McBSP3 Transmit Channel Enable Register Partition G	16	RW	0000h
0x00 B81Eh	E101:703C	MCBSP3_XCERH	McBSP3 Transmit Channel Enable Register Partition H	16	RW	0000h

Table 3–61. MCSI1 Registers

DSP WORD ADDRESS	MPU BYTE ADDRESS (VIA MPUI)	REGISTER NAME	DESCRIPTION	ACCESS WIDTH	ACCESS TYPE	RESET VALUE
0x00 9400h	E101:2800	MCSI1_CONTROL_REG	MCSI1 Control Register	16	RW	0000h
0x00 9401h	E101:2802	MCSI1_MAIN_PARAMETERS_REG	MCSI1 Main Parameters Register	16	RW	0000h
0x00 9402h	E101:2804	MCSI1_INTERRUPTS_REG	MCSI1 Interrupts Register	16	RW	0000h
0x00 9403h	E101:2806	MCSI1_CHANNEL_USED_REG	MCSI1 Channel Used Register	16	RW	0000h
0x00 9404h	E101:2808	MCSI1_OVER_CLOCK_REG	MCSI1 Over-Clock Register	16	RW	0000h
0x00 9405h	E101:280A	MCSI1_CLOCK_FREQUENCY_ REG	MCSI1 Clock Frequency Register	16	RW	0000h
0x00 9406h	E101:280C	MCSI1_STATUS_REG	MCSI1 Status Register	16	RW	0000h
0x00 9407h–0x00 941Fh		Reserved				
0x00 9420h	E101:2840	MCSI1_TX0	MCSI1 Transmit Word Register 0	16	RW	Undefined
0x00 9421h	E101:2842	MCSI1_TX1	MCSI1 Transmit Word Register 1	16	RW	Undefined
0x00 9422h	E101:2844	MCSI1_TX2	MCSI1 Transmit Word Register 2	16	RW	Undefined
0x00 9423h	E101:2846	MCSI1_TX3	MCSI1 Transmit Word Register 3	16	RW	Undefined
0x00 9424h	E101:2848	MCSI1_TX4	MCSI1 Transmit Word Register 4	16	RW	Undefined
0x00 9425h	E101:284A	MCSI1_TX5	MCSI1 Transmit Word Register 5	16	RW	Undefined
0x00 9426h	E101:284C	MCSI1_TX6	MCSI1 Transmit Word Register 6	16	RW	Undefined
0x00 9427h	E101:284E	MCSI1_TX7	MCSI1 Transmit Word Register 7	16	RW	Undefined
0x00 9428h	E101:2850	MCSI1_TX8	MCSI1 Transmit Word Register 8	16	RW	Undefined
0x00 9429h	E101:2852	MCSI1_TX9	MCSI1 Transmit Word Register 9	16	RW	Undefined
0x00 942Ah	E101:2854	MCSI1_TX10	MCSI1 Transmit Word Register 10	16	RW	Undefined
0x00 942Bh	E101:2856	MCSI1_TX11	MCSI1 Transmit Word Register 11	16	RW	Undefined
0x00 942Ch	E101:2858	MCSI1_TX12	MCSI1 Transmit Word Register 12	16	RW	Undefined
0x00 942Dh	E101:285A	MCSI1_TX13	MCSI1 Transmit Word Register 13	16	RW	Undefined
0x00 942Eh	E101:285C	MCSI1_TX14	MCSI1 Transmit Word Register 14	16	RW	Undefined
0x00 942Fh	E101:285E	MCSI1_TX15	MCSI1 Transmit Word Register 15	16	RW	Undefined
0x00 9430h	E101:2860	MCSI1_RX0	MCSI1 Receive Word Register 0	16	R	Undefined
0x00 9431h	E101:2862	MCSI1_RX1	MCSI1 Receive Word Register 1	16	R	Undefined
0x00 9432h	E101:2864	MCSI1_RX2	MCSI1 Receive Word Register 2	16	R	Undefined
0x00 9433h	E101:2866	MCSI1_RX3	MCSI1 Receive Word Register 3	16	R	Undefined
0x00 9434h	E101:2868	MCSI1_RX4	MCSI1 Receive Word Register 4	16	R	Undefined
0x00 9435h	E101:286A	MCSI1_RX5	MCSI1 Receive Word Register 5	16	R	Undefined
0x00 9436h	E101:286C	MCSI1_RX6	MCSI1 Receive Word Register 6	16	R	Undefined
0x00 9437h	E101:286E	MCSI1_RX7	MCSI1 Receive Word Register 7	16	R	Undefined
0x00 9438h	E101:2870	MCSI1_RX8	MCSI1 Receive Word Register 8	16	R	Undefined
0x00 9439h	E101:2872	MCSI1_RX9	MCSI1 Receive Word Register 9	16	R	Undefined
0x00 943Ah	E101:2874	MCSI1_RX10	MCSI1 Receive Word Register 10	16	R	Undefined
0x00 943Bh	E101:2876	MCSI1_RX11	MCSI1 Receive Word Register 11	16	R	Undefined
0x00 943Ch	E101:2878	MCSI1_RX12	MCSI1 Receive Word Register 12	16	R	Undefined
0x00 943Dh	E101:287A	MCSI1_RX13	MCSI1 Receive Word Register 13	16	R	Undefined
0x00 943Eh	E101:287C	MCSI1_RX14	MCSI1 Receive Word Register 14	16	R	Undefined
0x00 943Fh	E101:287E	MCSI1_RX15	MCSI1 Receive Word Register 15	16	R	Undefined

Table 3–62. MCSI2 Registers

DSP WORD ADDRESS	MPU BYTE ADDRESS (VIA MPUI)	REGISTER NAME	DESCRIPTION	ACCESS WIDTH	ACCESS TYPE	RESET VALUE
0x00 9000h	E101:2000	MCSI2_CONTROL_REG	MCSI2 control register	16	RW	0000h
0x00 9001h	E101:2002	MCSI2_MAIN_PARAMETERS_REG	MCSI2 main parameters register	16	RW	0000h
0x00 9002h	E101:2004	MCSI2_INTERRUPTS_REG	MCSI2 interrupts register	16	RW	0000h
0x00 9003h	E101:2006	MCSI2_CHANNEL_USED_REG	MCSI2 channel used register	16	RW	0000h
0x00 9004h	E101:2008	MCSI2_OVER_CLOCK_REG	MCSI2 over-clock register	16	RW	0000h
0x00 9005h	E101:200A	MCSI2_CLOCK_FREQUENCY_ REG	MCSI2 clock frequency register	16	RW	0000h
0x00 9006h	E101:200C	MCSI2_STATUS_REG	MCSI2 status register	16	RW	0000h
0x00 9007h – 0x00 901Fh		Reserved				
0x00 9020h	E101:2040	MCSI2_TX0	MCSI2 Transmit Word Register 0	16	RW	Undefined
0x00 9021h	E101:2042	MCSI2_TX1	MCSI2 Transmit Word Register 1	16	RW	Undefined
0x00 9022h	E101:2044	MCSI2_TX2	MCSI2 Transmit Word Register 2	16	RW	Undefined
0x00 9023h	E101:2046	MCSI2_TX3	MCSI2 Transmit Word Register 3	16	RW	Undefined
0x00 9024h	E101:2048	MCSI2_TX4	MCSI2 Transmit Word Register 4	16	RW	Undefined
0x00 9025h	E101:204A	MCSI2_TX5	MCSI2 Transmit Word Register 5	16	RW	Undefined
0x00 9026h	E101:204C	MCSI2_TX6	MCSI2 Transmit Word Register 6	16	RW	Undefined
0x00 9027h	E101:204E	MCSI2_TX7	MCSI2 Transmit Word Register 7	16	RW	Undefined
0x00 9028h	E101:2050	MCSI2_TX8	MCSI2 Transmit Word Register 8	16	RW	Undefined
0x00 9029h	E101:2052	MCSI2_TX9	MCSI2 Transmit Word Register 9	16	RW	Undefined
0x00 902Ah	E101:2054	MCSI2_TX10	MCSI2 Transmit Word Register 10	16	RW	Undefined
0x00 902Bh	E101:2056	MCSI2_TX11	MCSI2 Transmit Word Register 11	16	RW	Undefined
0x00 902Ch	E101:2058	MCSI2_TX12	MCSI2 Transmit Word Register 12	16	RW	Undefined
0x00 902Dh	E101:205A	MCSI2_TX13	MCSI2 Transmit Word Register 13	16	RW	Undefined
0x00 902Eh	E101:205C	MCSI2_TX14	MCSI2 Transmit Word Register 14	16	RW	Undefined
0x00 902Fh	E101:205E	MCSI2_TX15	MCSI2 Transmit Word Register 15	16	RW	Undefined
0x00 9030h	E101:2060	MCSI2_RX0	MCSI2 Receive Word Register 0	16	R	Undefined
0x00 9031h	E101:2062	MCSI2_RX1	MCSI2 Receive Word Register 1	16	R	Undefined
0x00 9032h	E101:2064	MCSI2_RX2	MCSI2 Receive Word Register 2	16	R	Undefined
0x00 9033h	E101:2066	MCSI2_RX3	MCSI2 Receive Word Register 3	16	R	Undefined
0x00 9034h	E101:2068	MCSI2_RX4	MCSI2 Receive Word Register 4	16	R	Undefined
0x00 9035h	E101:206A	MCSI2_RX5	MCSI2 Receive Word Register 5	16	R	Undefined
0x00 9036h	E101:206C	MCSI2_RX6	MCSI2 Receive Word Register 6	16	R	Undefined
0x00 9037h	E101:206E	MCSI2_RX7	MCSI2 Receive Word Register 7	16	R	Undefined
0x00 9038h	E101:2070	MCSI2_RX8	MCSI2 Receive Word Register 8	16	R	Undefined
0x00 9039h	E101:2072	MCSI2_RX9	MCSI2 Receive Word Register 9	16	R	Undefined
0x00 903Ah	E101:2074	MCSI2_RX10	MCSI2 Receive Word Register 10	16	R	Undefined
0x00 903Bh	E101:2076	MCSI2_RX11	MCSI2 Receive Word Register 11	16	R	Undefined
0x00 903Ch	E101:2078	MCSI2_RX12	MCSI2 Receive Word Register 12	16	R	Undefined
0x00 903Dh	E101:207A	MCSI2_RX13	MCSI2 Receive Word Register 13	16	R	Undefined
0x00 903Eh	E101:207C	MCSI2_RX14	MCSI2 Receive Word Register 14	16	R	Undefined
0x00 903Fh	E101:207E	MCSI2_RX15	MCSI2 Receive Word Register 15	16	R	Undefined

3.16.3 DSP Configuration Registers

The DSP configuration registers include the following:

- I-Cache and EMIF setup
  - DSP Instruction Cache Registers
  - DSP EMIF Configuration Registers
- TIPB setup
  - DSP TIPB Bridge Configuration Registers
  - DSP UART TI Peripheral Bus Switch Registers
- Clock Control:
  - DSP Clock Mode Registers

Table 3–63. DSP Instruction Cache Registers

DSP WORD ADDRESS	REGISTER NAME	DESCRIPTION	ACCESS WIDTH	ACCESS TYPE	RESET VALUE
0x00 1400h	ICGC	I-Cache Global Control Register	16	RW	C006h
0x00 1401h		Reserved	16	RW	0000h
0x00 1402h		Reserved	16	RW	0000h
0x00 1403h	ICWC	I-Cache Way Control Register	16	RW	000Dh
0x00 1404h	ICST	I-Cache Status Register	16	R	0000h
0x00 1405h	ICRC1	I-Cache Ramset 1 Control Register	16	RW	000Dh
0x00 1406h	ICRTAG1	I-Cache Remset 1 TAG Register	16	RW	0000h
0x00 1407h	ICRC2	I-Cache Ramset 2 Control Register	16	RW	000Dh
0x00 1408h	ICRTAG2	I-Cache Remset 2 TAG Register	16	RW	0000h

Table 3–64. DSP EMIF Configuration Register

DSP WORD ADDRESS	REGISTER NAME	DESCRIPTION	ACCESS WIDTH	ACCESS TYPE	RESET VALUE
0x00 0800h	DSP_EMIF_GCR	DSP EMIF Global Control Register	16	RW	0020h
0x00 0801h	DSP_EMIF_GRR	DSP EMIF Global Reset Register	16	RW	undef

Table 3–65. DSP TIPB Bridge Configuration Registers

DSP WORD ADDRESS	REGISTER NAME	DESCRIPTION	ACCESS WIDTH	ACCESS TYPE	RESET VALUE
0x00 0000h	TIPB_CMR	DSP TIPB Bridge Control Mode Register	16	RW	FE4Dh
0x00 0001h	TIPB_ICR	DSP TIPB Bridge Idle Control Register	16	RW	0000h
0x00 0002h	TIPB_ISTR	DSP TIPB Bridge Idle Status Register	16	R	0000h

Table 3–66. DSP UART TIPB Bus Switch Registers

DSP WORD ADDRESS	REGISTER NAME	DESCRIPTION	ACCESS WIDTH	ACCESS TYPE	RESET VALUE
0x00 E400h	RHSW_DSP_CNF1	UART1 TIPB Switch Configuration Register (DSP)	16	RW	0001h
0x00 E402h	RHSW_DSP_STA1	UART1 TIPB Switch Status Register (DSP)	16	R	0001h
0x00 E404–0x00 E0Eh		Reserved			
0x00 E410h	RHSW_DSP_CNF2	UART2 TIPB Switch Configuration Register (DSP)	16	RW	0001h
0x00 E412h	RHSW_DSP_STA2	UART2 TIPB Switch Status Register (DSP)	16	R	0001h
0x00 E414–0x00 E1Eh		Reserved			
0x00 E420h	RHSW_DSP_CNF3	UART3 TIPB Switch Configuration Register (DSP)	16	RW	0001h
0x00 E422h	RHSW_DSP_STA3	UART3 TIPB Switch Status Register (DSP)	16	R	0001h

Table 3–67. DSP Clock Mode Registers

DSP WORD ADDRESS	MPU BYTE ADDRESS (VIA MPUI)	REGISTER NAME	DESCRIPTION	ACCESS WIDTH	ACCESS TYPE	RESET VALUE
0x00 4000h	E100:8000	DSP_CKCTL	DSP Clock Control Register	16	RW	0000h
0x00 4002h	E100:8004	DSP_IDLECT1	DSP Idle Control 1 Register	16	RW	0000h
0x00 4004h	E100:8008	DSP_IDLECT2	DSP Idle Control 2 Register	16	RW	0000h
0x00 4006h – 0x00 4008h		Reserved				
0x00 400Ah	E100:8014	DSP_RSTCT2	DSP Peripheral Reset Control Register	16	RW	0000h
0x00 400Ch	E100:8018	DSP_SYSST	DSP System Status Register	16	RW	0000h

3.16.4 MPU/DSP Shared Peripheral Register Descriptions

The following tables describe the MPU/DSP shared peripheral registers including register addresses, descriptions, required access widths, access types (R-read, W-write, RW-read/write) and reset values. These tables are organized by function with like peripherals or functions together and are therefore not necessarily in order of ascending register addresses. Reserved addresses should never be accessed.

NOTE: All accesses to these registers must be of the data access widths indicated to avoid a TIPB bus error condition and a corresponding interrupt. Reserved addresses should never be accessed.

The MPU/DSP shared peripheral registers include the following:

- UARTs:
  - UART1 Registers
  - UART2 Registers
  - UART3/IrDA Registers
- GPIO and Mailboxes
  - MPU/DSP Shared GPIO Registers
  - MPU/DSP Shared Mailbox Registers

Table 3–68. UART1 Registers

DSP WORD ADDRESS	MPU BYTE ADDRESS	MPU BYTE ADDRESS (VIA MPUI)	REGISTER NAME	DESCRIPTION	ACCESS WIDTH	ACCESS TYPE	RESET VALUE
0x00 8000h	FFFB:0000	E101:0000	UART1_RHR†	UART1 Receive Holding Register	8	R	Undefined
0x00 8000h	FFFB:0000	E101:0000	UART1_THR†	UART1 Transmit Holding Register	8	W	Undefined
0x00 8000h	FFFB:0000	E101:0000	UART1_DLL‡§	UART1 Divisor Latch Low Register	8	RW	00h
0x00 8001h	FFFB:0004	E101:0002	UART1_IER†	UART1 Interrupt Enable Register	8	RW	00h
0x00 8001h	FFFB:0004	E101:0002	UART1_DLH‡§	UART1 Divisor Latch High Register	8	RW	00h
0x00 8002h	FFFB:0008	E101:0004	UART1_IIR†‡	UART1 Interrupt Identification Register	8	R	01h
0x00 8002h	FFFB:0008	E101:0004	UART1_FCR†‡¶	UART1 FIFO Control Register	8	W	00h
0x00 8002h	FFFB:0008	E101:0004	UART1_EFR§	UART1 Enhanced Feature Register	8	RW	00h
0x00 8003h	FFFB:000C	E101:0006	UART1_LCR	UART1 Line Control Register	8	RW	00h
0x00 8004h	FFFB:0010	E101:0008	UART1_MCR†‡¶	UART1 Modem Control Register	8	RW	00h
0x00 8004h	FFFB:0010	E101:0008	UART1_XON1§	UART1 XON1 Register	8	RW	00h
0x00 8005h	FFFB:0014	E101:000A	UART1_LSR†‡	UART1 Mode Register	8	R	60h
0x00 8005h	FFFB:0014	E101:000A	UART1_XON2§	UART1 XON2 Register	8	RW	00h
0x00 8006h	FFFB:0018	E101:000C	UART1_MSR†‡	UART1 Modem Status Register	8	R	Undefined
0x00 8006h	FFFB:0018	E101:000C	UART1_TCR#	UART1 Transmission Control Register	8	RW	0Fh
0x00 8006h	FFFB:0018	E101:000C	UART1_XOFF1§	UART1 XOFF1 Register	8	RW	00h
0x00 8007h	FFFB:001C	E101:000E	UART1_SPR†‡	UART1 Scratchpad Register	8	RW	00h
0x00 8007h	FFFB:001C	E101:000E	UART1_TLR#	UART1 Trigger Level Register	8	RW	00h
0x00 8007h	FFFB:001C	E101:000E	UART1_XOFF2§	UART1 XOFF2 Register	8	RW	00h
0x00 8008h	FFFB:0020	E101:0010	UART1_MDR1	UART1 Mode Definition 1 Register	8	RW	07h
0x00 8009h – 0x00 800Dh	FFFB:0024 – FFFB:0034			Reserved			
0x00 800Eh	FFFB:0038	E101:001C	UART1_UASR‡§	UART1 Autobauding Status Register	8	R	00h
0x00 800Fh	FFFB:003C			Reserved			
0x00 8010h	FFFB:0040	E101:0020	UART1_SCR	UART1 Supplementary Control Register	8	RW	00h
0x00 8011h	FFFB:0044	E101:0022	UART1_SSR	UART1 Supplementary Status Register	8	R	00h
0x00 8012h	FFFB:0048			Reserved			
0x00 8013h	FFFB:004C	E101:0026	UART1_OSC_12M_SEL†	UART1 12-/13-MHz Oscillator Select Register	8	W	00h
0x00 8014h	FFFB:0050	E101:0028	UART1_MVR	UART1 Module Version Register	8	R	–

† Register is accessible when LCR[7] = 0 (normal operating mode)
‡ Register is accessible when LCR[7] = 1 and LCR[7:0] $\neq$ 0BFh
§ Register is accessible when LCR[7] = 0BFh
¶ Register is write accessible when EFR[4] = 1
# Register is accessible when EFR[4] = 1 and MCR[6] = 1

Table 3–69. UART2 Registers

DSP WORD ADDRESS	MPU BYTE ADDRESS	MPU BYTE ADDRESS (VIA MPUI)	REGISTER NAME	DESCRIPTION	ACCESS WIDTH	ACCESS TYPE	RESET VALUE
0x00 8400h	FFFB:0800	E101:0800	UART2_RHR†	UART2 Receive Holding Register	8	R	Undefined
0x00 8400h	FFFB:0800	E101:0800	UART2_THR†	UART2 Transmit Holding Register	8	W	Undefined
0x00 8400h	FFFB:0800	E101:0800	UART2_DLL‡§	UART2 Divisor Latch Low Register	8	RW	00h
0x00 8401h	FFFB:0804	E101:0802	UART2_IER†	UART2 Interrupt Enable Register	8	RW	00h
0x00 8401h	FFFB:0804	E101:0802	UART2_DLH‡§	UART2 Divisor Latch High Register	8	RW	00h
0x00 8402h	FFFB:0808	E101:0804	UART2_IIR†‡	UART2 Interrupt Identification Register	8	R	01h
0x00 8402h	FFFB:0808	E101:0804	UART2_FCR†‡¶	UART2 FIFO Control Register	8	W	00h
0x00 8402h	FFFB:0808	E101:0804	UART2_EFR§	UART2 Enhanced Feature Register	8	RW	00h
0x00 8403h	FFFB:080C	E101:0806	UART2_LCR	UART2 Line Control Register	8	RW	00h
0x00 8404h	FFFB:0810	E101:0808	UART2_MCR†‡¶	UART2 Modem Control Register	8	RW	00h
0x00 8404h	FFFB:0810	E101:0808	UART2_XON1§	UART2 XON1 Register	8	RW	00h
0x00 8405h	FFFB:0814	E101:080A	UART2_LSR†‡	UART2 Mode Register	8	R	60h
0x00 8405h	FFFB:0814	E101:080A	UART2_XON2§	UART2 XON2 Register	8	RW	00h
0x00 8406h	FFFB:0818	E101:080C	UART2_MSR†‡	UART2 Modem Status Register	8	R	Undefined
0x00 8406h	FFFB:0818	E101:080C	UART2_TCR#	UART2 Transmission Control Register	8	RW	0Fh
0x00 8406h	FFFB:0818	E101:080C	UART2_XOFF1§	UART2 XOFF1 Register	8	RW	00h
0x00 8407h	FFFB:081C	E101:080E	UART2_SPR†‡	UART2 Scratchpad Register	8	RW	00h
0x00 8407h	FFFB:081C	E101:080E	UART2_TLR#	UART2 Trigger Level Register	8	RW	00h
0x00 8407h	FFFB:081C	E101:080E	UART2_XOFF2§	UART2 XOFF2 Register	8	RW	00h
0x00 8408h	FFFB:0820	E101:0810	UART2_MDR1	UART2 Mode Definition 1 Register	8	RW	07h
0x00 8409 – 0x00840Dh	FFFB:0824 – FFFB:0834			Reserved			
0x00 840Eh	FFFB:0838	E101:081C	UART2_UASR‡§	UART2 Autobauding Status Register	8	R	00h
0x00 840Fh	FFFB:083C			Reserved			
0x00 8410h	FFFB:0840	E101:0820	UART2_SCR	UART2 Supplementary Control Register	8	RW	00h
0x00 8411h	FFFB:0844	E101:0822	UART2_SSR	UART2 Supplementary Status Register	8	R	00h
0x00 8412h	FFFB:0848			Reserved			
0x00 8413h	FFFB:084C	E101:0826	UART2_OSC_12M_SELV†	UART2 12-/13-MHz Oscillator Select Register	8	W	00h
0x00 8414h	FFFB:0850	E101:0828	UART2_MVR	UART2 Module Version Register	8	R	–

† Register is accessible when LCR[7] = 0 (normal operating mode)
‡ Register is accessible when LCR[7] = 1 and LCR[7:0] $\neq$ 0BFh
§ Register is accessible when LCR[7] = 0BFh
¶ Register is write accessible when EFR[4] = 1
# Register is accessible when EFR[4] = 1 and MCR[6] = 1

Table 3–70. UART3/IrDA Registers

DSP WORD ADDRESS	MPU BYTE ADDRESS	MPU BYTE ADDRESS (VIA MPUI)	REGISTER NAME	DESCRIPTION	ACCESS WIDTH	ACCESS TYPE	RESET VALUE
0x00 CC00h	FFFB:9800	E101:9800	UART3_RHR†	UART3 Receive Holding Register	8	R	Undefined
0x00 CC00h	FFFB:9800	E101:9800	UART3_THR†	UART3 Transmit Holding Register	8	W	Undefined
0x00 CC00h	FFFB:9800	E101:9800	UART3_DLL‡§	UART3 Divisor Latch Low Register	8	RW	00h
0x00 CC01h	FFFB:9804	E101:9802	UART3_IER†	UART3 Interrupt Enable Register	8	RW	00h
0x00 CC01h	FFFB:9804	E101:9802	UART3_DLH‡§	UART3 Divisor Latch High Register	8	RW	00h
0x00 CC02h	FFFB:9808	E101:9804	UART3_IIR†‡	UART3 Interrupt Identification Register	8	R	01h
0x00 CC02h	FFFB:9808	E101:9804	UART3_FCR†‡¶	UART3 FIFO Control Register	8	W	00h
0x00 CC02h	FFFB:9808	E101:9804	UART3_EFR§	UART3 Enhanced Feature Register	8	RW	00h
0x00 CC03h	FFFB:980C	E101:9806	UART3_LCR	UART3 Line Control Register	8	RW	00h
0x00 CC04h	FFFB:9810	E101:9808	UART3_MCR†‡¶	UART3 Modem Control Register	8	RW	00h
0x00 CC04h	FFFB:9810	E101:9808	UART3_XON1§	UART3 XON1 Register	8	RW	00h
0x00 CC05h	FFFB:9814	E101:980A	UART3_LSR†‡	UART3 Mode Register	8	R	60h
0x00 CC05h	FFFB:9814	E101:980A	UART3_XON2§	UART3 XON2 Register	8	RW	00h
0x00 CC06h	FFFB:9818	E101:980C	UART3_MSR†‡	UART3 Modem Status Register	8	R	Undefined
0x00 CC06h	FFFB:9818	E101:980C	UART3_TCR#	UART3 Transmission Control Register	8	RW	0Fh
0x00 CC06h	FFFB:9818	E101:980C	UART3_XOFF1§	UART3 XOFF1 Register	8	RW	00h
0x00 CC07h	FFFB:981C	E101:980E	UART3_SPR†‡	UART3 Scratchpad Register	8	RW	00h
0x00 CC07h	FFFB:981C	E101:980E	UART3_TLR#	UART3 Trigger Level Register	8	RW	00h
0x00 CC07h	FFFB:981C	E101:980E	UART3_XOFF2§	UART3 XOFF2 Register	8	RW	00h
0x00 CC08h	FFFB:9820	E101:9810	UART3_MDR1	UART3 Mode Definition 1 Register	8	RW	07h
0x00 CC09h	FFFB:9824	E101:9812	UART3_MDR2	UART3 Mode Definition Register 2	8	RW	00h
0x00 CC0Ah	FFFB:9828	E101:9814	UART3_SFLSR	UART3 Status FIFO Line Status Register	8	R	00h
0x00 CC0Ah	FFFB:9828	E101:9814	UART3_TXFLL	UART3 Transmit Frame Length Low	8	W	00h
0x00 CC0Bh	FFFB:982C	E101:9816	UART3_RESUME	UART3 Resume Register	8	R	00h
0x00 CC0Bh	FFFB:982C	E101:9816	UART3_TXFLH	UART3 Transmit Frame Length High	8	W	00h
0x00 CC0Ch	FFFB:9830	E101:9818	UART3_SFREGL	UART3 Status FIFO Low Register	8	R	Undefined
0x00 CC0Ch	FFFB:9830	E101:9818	UART3_RXFLL	UART3 Receive Frame Length Low	8	W	00h
0x00 CC0Dh	FFFB:9834	E101:981A	UART3_SFREGH	UART3 Status FIFO High Register	8	R	Undefined
0x00 CC0Dh	FFFB:9834	E101:981A	UART3_RXFLH	UART3 Receive Frame Length High	8	W	00h
0x00 CC0Eh	FFFB:9838	E101:981C	UART3_BLR†	UART3 BOF Control Register	8	RW	40h
0x00 CC0Fh	FFFB:983C	E101:981E	UART3_ACREG†	UART3 Auxiliary Control Register	8	RW	00h

† Register is accessible when LCR[7] = 0 (normal operating mode)
‡ Register is accessible when LCR[7] = 1 and LCR[7:0] $\neq$ 0BFh
§ Register is accessible when LCR[7] = 0BFh
¶ Register is write accessible when EFR[4] = 1
# Register is accessible when EFR[4] = 1 and MCR[6] = 1

Table 3–70. UART3/IrDA Registers (Continued)

DSP WORD ADDRESS	MPU BYTE ADDRESS	MPU BYTE ADDRESS (VIA MPUI)	REGISTER NAME	DESCRIPTION	ACCESS WIDTH	ACCESS TYPE	RESET VALUE
0x00 CC0Fh	FFFB:983C	E101:981E	UART3_DIV16‡§	UART3 Divide 1.6 Register	8	RW	00h
0x00 CC10h	FFFB:9840	E101:9820	UART3_SCR	UART3 Supplementary Control Register	8	RW	00h

† Register is accessible when LCR[7] = 0 (normal operating mode)
‡ Register is accessible when LCR[7] = 1 and LCR[7:0] $\neq$ 0BFh
§ Register is accessible when LCR[7] = 0BFh
¶ Register is write accessible when EFR[4] = 1
# Register is accessible when EFR[4] = 1 and MCR[6] = 1

Table 3–71. MPU/DSP Shared GPIO Registers

DSP WORD ADDRESS	MPU BYTE ADDRESS	REGISTER NAME	DESCRIPTION	ACCESS WIDTH	MPU ACCESS	DSP ACCESS	RESET VALUE
0x00 F000h	FFFC:E000	DATA_INPUT	Data Input Register	16	R	R	0000h
0x00 F002h	FFFC:E004	DATA_OUTPUT	Data Output Register	16	RW	RW	FFFFh
0x00 F004h	FFFC:E008	DIRECTION_CONTROL	Direction Control Register	16	RW	RW	FFFFh
0x00 F006h	FFFC:E00C	INTERRUPT_CONTROL	Interrupt Control Register	16	RW	RW	FFFFh
0x00 F008h	FFFC:E010	INTERRUPT_MASK	Interrupt Mask Register	16	RW	RW	FFFFh
0x00 F00Ah	FFFC:E014	INTERRUPT_STATUS	Interrupt Status Register	16	RW	RW	0000h
0x00 F00Ch	FFFC:E018	PIN_CONTROL	Pin Control Register	16	RW	R	FFFFh

Table 3–72. MPU/DSP Shared Mailbox Registers

DSP WORD ADDRESS	MPU BYTE ADDRESS	REGISTER NAME	DESCRIPTION	ACCESS WIDTH	MPU ACCESS TYPE	DSP ACCESS TYPE	RESET VALUE
0x00 F800h	FFFC:F000	ARM2DSP1	MPU to DSP 1 Data Register	16	RW	R	0000h
0x00 F802h	FFFC:F004	ARM2DSP1B	MPU to DSP 1 Command Register	16	RW	R	0000h
0x00 F804h	FFFC:F008	DSP2ARM1	DSP to MPU 1 Data Register	16	R	RW	0000h
0x00 F806h	FFFC:F00C	DSP2ARM1B	DSP to MPU 1 Command Register	16	R	RW	0000h
0x00 F808h	FFFC:F010	DSP2ARM2	DSP to MPU 2 Data Register	16	R	RW	0000h
0x00 F80Ah	FFFC:F014	DSP2ARM2B	DSP to MPU 2 Command Register	16	R	RW	0000h
0x00 F80Ch	FFFC:F018	ARM2DSP1_FLAG	MPU to DSP 1 Flag Register	16	R	R	undef
0x00 F80Eh	FFFC:F01C	DSP2ARM1_FLAG	DSP to MPU 1 Flag Register	16	R	R	undef
0x00 F810h	FFFC:F020	DSP2ARM2_FLAG	DSP to MPU 2 Flag Register	16	R	R	undef
0x00 F812h	FFFC:F024	ARM2DSP2	MPU to DSP 2 Data Register	16	RW	R	0000h
0x00 F814h	FFFC:F028	ARM2DSP2B	MPU to DSP 2 Command Register	16	RW	R	0000h
0x00 F816h	FFFC:F02C	ARM2DSP2_FLAG	MPU to DSP 2 Flag Register	16	R	R	undef

3.17 Interrupts

Table 3–73. MPU Level 1 and Level 2 Interrupt Mappings

INTERRUPT	DEFAULT SENSITIVITY	LEVEL 1 MAPPING	LEVEL 2 MAPPING	FUNCTION
Level 2 Interrupt handler FIQ	Level	IRQ_0	–	FIQ Interrupt From Level 2 Handler
CAMERA_IF_INTERRUPT	Level	IRQ_1	–	Camera Interface Interrupt
Reserved	–	IRQ_2	–	Reserved, Keep Masked
External FIQ	Edge	IRQ_3	–	External FIQ Interrupt
McBSP2 TX INT	Edge	IRQ_4	–	McBSP2 Transmit Interrupt
McBSP2 RX INT	Edge	IRQ_5	–	McBSP2 Receive Interrupt
IRQ_RTDX	Level	IRQ_6	–	Real-Time Data Exchange Interrupt (for RTDX Emulation Tools)
IRQ_DSP_MMU_ABORT	Level	IRQ_7	–	DSP MMU Abort Interrupt
IRQ_HOST_INT	Level	IRQ_8	–	
IRQ_ABORT	Level	IRQ_9	–	
IRQ_DSP_MAILBOX1	Level	IRQ_10	–	DSP2ARM1 Mailbox Interrupt
IRQ_DSP_MAILBOX2	Level	IRQ_11	–	DSP2ARM2 Mailbox Interrupt
Reserved	–	IRQ_12	–	Reserved, Keep Masked
IRQ_TIPB_BRIDGE_PRIVATE	Level	IRQ_13	–	TIPB Private Bridge Interrupt
IRQ_GPIO	Level	IRQ_14	–	MPU Interrupt for MPU-Owned Shared GPI
IRQ_UART3	Level	IRQ_15	–	UART3 Interrupt
IRQ_TIMER3	Edge	IRQ_16	–	MPU Timer 3 Interrupt
IRQ_LB_MMU	Level	IRQ_17	–	Local Bus MMU Interrupt
Reserved	–	IRQ_18	–	Reserved, Keep Masked
IRQ_DMA_CH0_CH6	Level	IRQ_19	–	System DMA Channel 0 and 6 Interrupt
IRQ_DMA_CH1_CH7	Level	IRQ_20	–	System DMA Channel 1 and 7 Interrupt
IRQ_DMA_CH2_CH8	Level	IRQ_21	–	System DMA Channel 2 and 8 Interrupt
IRQ_DMA_CH3	Level	IRQ_22	–	System DMA Channel 3 Interrupt
IRQ_DMA_CH4	Level	IRQ_23	–	System DMA Channel 4 Interrupt
IRQ_DMA_CH5	Level	IRQ_24	–	System DMA Channel 5 Interrupt
IRQ_DMA_CH_LCD	Level	IRQ_25	–	System DMA LCD Channel Interrupt
IRQ_TIMER1	Edge	IRQ_26	–	MPU Timer 1 Interrupt
IRQ_WD_TIMER	Edge	IRQ_27	–	MPU Watchdog Timer Interrupt
IRQ_TIPB_BRIDGE_PUBLIC	Level	IRQ_28	–	TIPB Public Bridge Interrupt
IRQ_LOCAL_BUS_IF	Level	IRQ_29	–	Local Bus Interrupt
IRQ_TIMER2	Edge	IRQ_30	–	MPU Timer 2 Interrupt
IRQ_LCD_CTRL	Level	IRQ_31	–	LCD Controller Interrupt
FAC	Level	IRQ_0	IRQ_0	Frame Adjustment Counter Interrupt
KBD	Edge	IRQ_0	IRQ_1	Keyboard Interrupt
MICROWIRE_TX	Edge	IRQ_0	IRQ_2	MICROWIRE Transmit Interrupt
MICROWIRE_RX	Edge	IRQ_0	IRQ_3	MICROWIRE Receive Interrupt
I2C	Edge	IRQ_0	IRQ_4	I^2C Interrupt
MPUIO	Level	IRQ_0	IRQ_5	MPUIO Interrupt

Table 3–73. MPU Level 1 and Level 2 Interrupt Mappings (Continued)

INTERRUPT	DEFAULT SENSITIVITY	LEVEL 1 MAPPING	LEVEL 2 MAPPING	FUNCTION
USB_HHC1	Level	IRQ_0	IRQ_6	USB Host HHC1 Interrupt
Reserved	–	IRQ_0	IRQ_7	
Reserved	–	IRQ_0	IRQ_8	
Reserved	–	IRQ_0	IRQ_9	
MCBSP3_TX_INT	Edge	IRQ_0	IRQ_10	McBSP3 Transmit Interrupt
MCBSP3_RX_INT	Edge	IRQ_0	IRQ_11	McBSP3 Receive Interrupt
MCBSP1_TX_INT	Edge	IRQ_0	IRQ_12	McBSP1 Transmit Interrupt
MCBSP1_RX_INT	Edge	IRQ_0	IRQ_13	McBSP1 Receive Interrupt
UART1	Level	IRQ_0	IRQ_14	UART1 Interrupt
UART2	Level	IRQ_0	IRQ_15	UART2 Interrupt
MCSI1_TX_RX_FE_INT	Level	IRQ_0	IRQ_16	MCSI1 Combined Transmit/Receive/Frame Error Interrupt
MCSI2_TX_RX_FE_INT	Level	IRQ_0	IRQ_17	MCSI2 Combined Transmit/Receive/Frame Error Interrupt
Reserved	–	IRQ_0	IRQ_18	Reserved, Keep Masked
Reserved	–	IRQ_0	IRQ_19	Reserved, Keep Masked
USB_CLNT_GENI_INT	Level	IRQ_0	IRQ_20	USB Function General-Purpose Interrupt
1WIRE_INT	Level	IRQ_0	IRQ_21	1-Wire Interface Interrupt
TIMER_32K_INT	Edge	IRQ_0	IRQ_22	32k Timer Interrupt
MMC_INT	Level	IRQ_0	IRQ_23	MMC/SD Interrupt
ULPD_INT	Level	IRQ_0	IRQ_24	Ultra-Low Power Device module Interrupt
RTC_PERIODIC_TIMER	Edge	IRQ_0	IRQ_25	Real-Time Clock Periodic Timer Interrupt
RTC_ALARM	Level	IRQ_0	IRQ_26	Real-Time Clock Alarm Interrupt
Reserved	–	IRQ_0	IRQ_27	
DSPMMU_IRQ	Level	IRQ_0	IRQ_28	DSP MMU Interrupt
USB_FUNC_IRQ_ISO_ON	Level	IRQ_0	IRQ_29	USB Function Isochronous On Interrupt
USB_FUNC_IRQ_NONISO_ON	Level	IRQ_0	IRQ_30	USB Function Non-Isochronous On Interrupt
MCBSP2_RX_OVERFLOW_INT	Edge	IRQ_0	IRQ_31	McBSP2 Receive Overflow Interrupt

Table 3–74. DSP Level 1 Interrupt Mappings

INTERRUPT	DSP INTERRUPT	DSP IFR/IMR REGISTER BIT	VECTOR LOCATION (BYTE ADDRESS)	PRIORITY	FUNCTION
RESET	–	–	FFF00h	0	DSP Reset Interrupt
NMI	–	–	FFF08h	1	DSP Nonmaskable Interrupt
EMULATOR_TEST	INT2	2	FFF10h	3	DSP Emulator/Test Interrupt
LEVEL2_INTH_FIQ	INT3	3	FFF18h	5	FIQ Interrupt From DSP Level 2 Handler
TC_ABORT	INT4	4	FFF20h	6	Traffic Controller Abort Interrupt
MAILBOX_1 (ARM2DSP1)	INT5	5	FFF28h	7	MPU-to-DSP Mailbox 1 Interrupt
Reserved	INT6	6	FFF30h	9	Unused, Keep Masked
GPIO	INT7	7	FFF38h	10	Interrupt for DSP-Owned Shared GPIO
TIMER3	INT8	8	FFF40h	11	DSP Timer 3 Interrupt
DMA_CHANNEL_1	INT9	9	FFF48h	13	DSP DMA Channel 1 Interrupt
MPU	INT10	10	FFF50h	14	MPU Interrupt to DSP
Reserved	INT11	11	FFF58h	15	Unused, Keep Masked
UART3	INT12	12	FFF60h	17	UART Interrupt
WDGTIMER	INT13	13	FFF68h	18	DSP Watchdog Timer Interrupt
DMA_CHANNEL_4	INT14	14	FFF70h	21	DSP DMA Channel 4 Interrupt
DMA_CHANNEL_5	INT15	15	FFF78h	22	DSP DMA Channel 5 Interrupt
EMIF	INT16	16	FFF80h	4	Interrupt for DMA EMIF Interface to Traffic Controller
LOCAL_BUS	INT17	17	FFF88h	8	Local Bus Interrupt
DMA_CHANNEL_0	INT18	18	FFF90h	12	DSP DMA Channel 0 Interrupt
MAILBOX2 (ARM2DSP2)	INT19	19	FFF98h	16	MPU-to-DSP Mailbox 2 Interrupt
DMA_CHANNEL_2	INT20	20	FFFA0h	19	DSP DMA Channel 2 Interrupt
DMA_CHANNEL_3	INT21	21	FFFA8h	20	DSP DMA Channel 3 Interrupt
TIMER2	INT22	22	FFFB0h	23	DSP Timer 2 Interrupt
TIMER1	INT23	23	FFFB8h	24	DSP Timer 1 Interrupt

Table 3–75. DSP Level 2 Interrupt Mappings

INTERRUPT	DEFAULT SENSITIVITY	LEVEL 1 MAPPING	LEVEL 2 MAPPING	FUNCTION
MCBSP3_TX	Edge	INT3	IRQ_0	McBSP3 Transmit Interrupt
MCBSP3_RX	Edge	INT3	IRQ_1	McBSP3 Receive Interrupt
MCBSP1_TX	Edge	INT3	IRQ_2	McBSP1 Transmit Interrupt
MCBSP1_RX	Edge	INT3	IRQ_3	McBSP1 Receive Interrupt
UART2	Level	INT3	IRQ_4	UART2 Interrupt
UART1	Level	INT3	IRQ_5	UART1 Interrupt
MCSI1_TX	Level	INT3	IRQ_6	MCSI1 Transmit Interrupt
MCSI1_RX	Level	INT3	IRQ_7	MCSI1 Receive Interrupt
MCSI2_TX	Level	INT3	IRQ_8	MCSI2 Transmit Interrupt
MCSI2_RX	Level	INT3	IRQ_9	MCSI2 Receive Interrupt
MCSI1_FRAME_ERROR_INT	Level	INT3	IRQ_10	MCSI1 Frame Error Interrupt
MCSI2_FRAME_ERROR_INT	Level	INT3	IRQ_11	MCSI2 Frame Error Interrupt
Reserved	–	INT3	IRQ_12	Reserved, Keep Masked
Reserved	–	INT3	IRQ_13	Reserved, Keep Masked
Reserved	–	INT3	IRQ_14	Reserved, Keep Masked
Reserved	–	INT3	IRQ_15	Reserved, Keep Masked

3.18 MPU System DMA Request Mapping

Table 3−76 shows the MPU system DMA request mapping for the OMAP5910 device.

Table 3−76. DMA Request Mapping

MPU SYSTEM DMA REQUESTS	MPU SYSTEM DMA
MCSI1 TX	DMA_REQ_01
MCSI1 RX	DMA_REQ_02
I^2C RX	DMA_REQ_03
I^2C TX	DMA_REQ_04
$\overline{\text{EXT_DMA_REQ0}}$ (MPUIO2)	DMA_REQ_05
$\overline{\text{EXT_DMA_REQ1}}$ (MPUIO4)	DMA_REQ_06
MicroWire TX	DMA_REQ_07
McBSP1 TX	DMA_REQ_08
McBSP1 RX	DMA_REQ_09
McBSP3 TX	DMA_REQ_10
McBSP3 RX	DMA_REQ_011
UART1 TX	DMA_REQ_012
UART1 RX	DMA_REQ_013
UART2 TX	DMA_REQ_014
UART2 RX	DMA_REQ_015
McBSP2 TX	DMA_REQ_016
McBSP2 RX	DMA_REQ_017
UART3 TX	DMA_REQ_018
UART3 RX	DMA_REQ_019
Camera RX	DMA_REQ_020
MMC TX	DMA_REQ_021
MMC RX	DMA_REQ_022
Reserved	DMA_REQ_023
Reserved	DMA_REQ_024
Reserved	DMA_REQ_025
USB function RX0	DMA_REQ_026
USB function RX1	DMA_REQ_027
USB function RX2	DMA_REQ_028
USB function TX0	DMA_REQ_029
USB function TX1	DMA_REQ_030
USB function TX2	DMA_REQ_031

3.19 DSP DMA Event Mapping

Table 3–77 defines the mappings of the DMA channel synchronization settings to the different request sources that can be used to create DSP DMA events on OMAP5910.

Table 3–77. DSP DMA Mapping

DSP REQUEST SOURCE	DSP DMA REQUEST LINE
MCSI1 TX	DMA_REQ_01
MCSI1 RX	DMA_REQ_02
MCSI2 TX	DMA_REQ_03
MCSI2 RX	DMA_REQ_04
$\overline{\text{EXT_DMA_REQ0}}$ (MPUIO2)	DMA_REQ_05
$\overline{\text{EXT_DMA_REQ1}}$ (MPUIO4)	DMA_REQ_06
Reserved	DMA_REQ_07
McBSP1 TX	DMA_REQ_08
McBSP1 RX	DMA_REQ_09
McBSP3 TX	DMA_REQ_10
McBSP3 RX	DMA_REQ_011
UART1 TX	DMA_REQ_012
UART1 RX	DMA_REQ_013
UART2 TX	DMA_REQ_014
UART2 RX	DMA_REQ_015
Reserved	DMA_REQ_016
Reserved	DMA_REQ_017
UART3 TX	DMA_REQ_018
UART3 RX	DMA_REQ_019

4 Documentation Support

Extensive documentation supports all OMAP platform of devices from product announcement through applications development. The following types of documentation are available to support the design and use of the OMAP platform of dual-core processor devices:

- Device-specific data sheets
- Development-support tools
- Hardware and software application reports

The OMAP5910 reference documentation includes, but is not limited to, the following:

- *TMS320C55x DSP CPU Programmer's Reference Supplement* (literature number SPRU652)
- *OMAP5910 Dual-Core Processor Functional and Peripheral Overview* (literature number SPRU602)
- *OMAP5910 Dual-Core Processor MPU Subsystems Reference Guide* (literature number SPRU671)
- *OMAP5910 Dual-Core Processor DSP Subsystems Reference Guide* (literature number SPRU672)
- *OMAP5910 Dual-Core Processor Memory Interface Traffic Controller Reference Guide* (literature number SPRU673)
- *OMAP5910 Dual-Core Processor System DMA Controller Reference Guide* (literature number SPRU674)
- *OMAP5910 Dual-Core Processor LCD Controller Reference Guide* (literature number SPRU675)
- *OMAP5910 Dual-Core Processor Universal Asynchronous Receiver/Transmitter (UART) Devices Reference Guide* (literature number SPRU676)
- *OMAP5910 Dual-Core Processor Universal Serial Bus (USB) and Frame Adjustment Counter (FAC) Reference Guide* (literature number SPRU677)
- *OMAP5910 Dual-Core Processor Clock Generation and System Reset Management Reference Guide* (literature number SPRU678)
- *OMAP5910 Dual-Core Processor General-Purpose Input/Output (GPIO) Reference Guide* (literature number SPRU679)
- *OMAP5910 Dual-Core Processor MultiMedia Card/Secure Data Memory Card (MMC/SD) Reference Guide* (literature number SPRU680)
- *OMAP5910 Dual-Core Processor Inter-Integrated Circuit (I^2C) Controller Reference Guide* (literature number SPRU681)
- *OMAP5910 Dual-Core Processor Timer Reference Guide* (literature number SPRU682)
- *OMAP5910 Dual-Core Processor Inter-Processor Communication Reference Guide* (literature number SPRU683)
- *OMAP5910 Dual-Core Processor Camera Interface Reference Guide* (literature number SPRU684)
- *OMAP5910 Dual-Core Processor Multichannel Serial Interface (MCSI) Reference Guide* (literature number SPRU685)
- *OMAP5910 Dual-Core Processor MicroWire Interface Reference Guide* (literature number SPRU686)
- *OMAP5910 Dual-Core Processor Real-Time Clock (RTC) Reference Guide* (literature number SPRU687)
- *OMAP5910 Dual-Core Processor HDQ/1-Wire Interface Reference Guide* (literature number SPRU688)
- *OMAP5910 Dual-Core Processor PWL, PWT, and LED Reference Guide* (literature number SPRU689)
- *OMAP5910 Dual-Core Processor Multichannel Buffered Serial Port (McBSP) Reference Guide* (literature number SPRU708)
- *OMAP5910 Dual-Core Processor Silicon Errata* (literature number SPRZ016)

A series of DSP textbooks is published by Prentice-Hall and John Wiley & Sons to support digital signal processing research and education. The TMS320 DSP newsletter, *Details on Signal Processing*, is published quarterly and distributed to update TMS320 DSP customers on product information.

Information regarding Texas Instruments (TI) OMAP and DSP products is also available on the Worldwide Web at *http://www.ti.com* uniform resource locator (URL).

TMS320 and TMS320C5000 are trademarks of Texas Instruments.

4.1 Device and Development-Support Tool Nomenclature

To designate the stages in the product development cycle, TI assigns prefixes to the part numbers of all OMAP™ processors and support tools. Each commercial OMAP platform member has one of three prefixes: X, P, or null (no prefix). Texas Instruments recommends two of three possible prefix designators for its support tools: TMDX and TMDS. These prefixes represent evolutionary stages of product development from engineering prototypes (TMDX) through fully qualified production devices/tools (TMDS).

Device development evolutionary flow:

X Experimental device that is not necessarily representative of the final device's electrical specifications and may not use production assembly flow. (TMX definition)

P Prototype device that is not necessarily the final silicon die and may not necessarily meet final electrical specifications. (TMP definition)

null Production version of the silicon die that is fully qualified. (TMS definition)

Support tool development evolutionary flow:

TMDX Development support product that has not yet completed Texas Instruments internal qualification testing.

TMDS Fully qualified development support product

TMX and TMP devices and TMDX development-support tools are shipped against the following disclaimer:

"Developmental product is intended for internal evaluation purposes."

Production devices and TMDS development-support tools have been characterized fully, and the quality and reliability of the device have been demonstrated fully. TI's standard warranty applies.

Predictions show that prototype devices (X or P), have a greater failure rate than the standard production devices. Texas Instruments recommends that these devices not be used in any production system because their expected end-use failure rate still is undefined. Only qualified production devices are to be used.

For additional description of the device nomenclature markings, see the *OMAP5910 Dual-Core Processor Silicon Errata* (literature number SPRZ016).

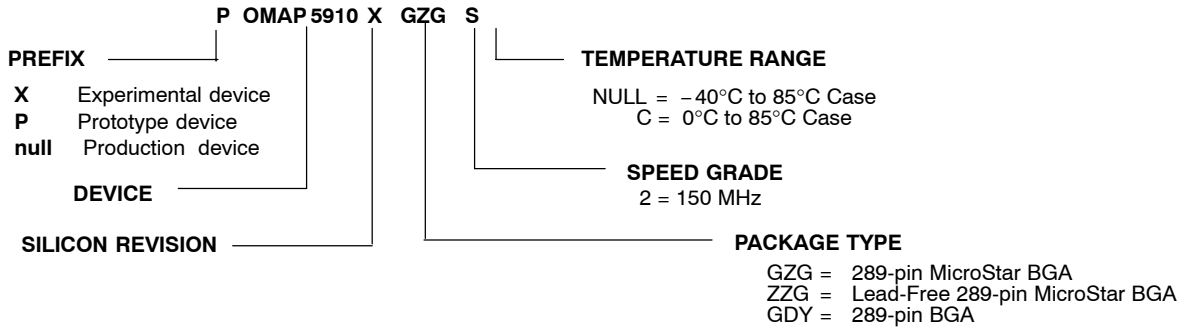

Figure 4–1. OMAP Device Nomenclature

5 Electrical Specifications

This section provides the absolute maximum ratings and the recommended operating conditions for the OMAP5910 device.

All electrical and switching characteristics in this data manual are valid over the recommended operating conditions unless otherwise specified.

5.1 Absolute Maximum Ratings

The list of absolute maximum ratings are specified over operating case temperature. Stresses beyond those listed under “absolute maximum ratings” may cause permanent damage to the device. These are stress ratings only, and functional operation of the device at these or any other conditions beyond those indicated under Section 5.2, Recommended Operating Conditions, is not implied. Exposure to absolute-maximum-rated conditions for extended periods may affect device reliability. All supply voltage values (core and I/O) are with respect V_{SS}.

NOTE: The OMAP5910 device has undergone Charged Device Model Electrostatic Discharge (ESD) testing, passing at the ±500 V level. Human Body Model (HBM) ESD testing per EIA/JESD22-A114 has also been performed. Test results indicate that the OMAP5910 passes at a ±500 V HBM (maximum) level. Caution in handling devices is advised.

This section provides the absolute maximum ratings for the OMAP5910 device.

- Supply voltage range (core), CV_{DD},$CV_{DD1/2/3/4/A}$ . . . . . −0.3 V to 1.8 V
- Supply voltage range (I/O), $DV_{DD1/2/3/4/5}$ . . . . . −0.3 V to 4 V
- Input voltage range, V_I (12-MHz and 32-kHz oscillator) . . . . . −0.3 V to CV_{DD} + 0.5 V
- Input voltage range, V_I (standard LVCMOS) . . . . . −0.3 V to DV_{DD} + 0.5 V
- Input voltage range, V_I (fail-safe LVCMOS) . . . . . −0.3 V to 4.5 V
- Input voltage range, V_I (USB transceivers) . . . . . −0.3 V to DV_{DD} + 0.5 V
- Input voltage range, V_I (I^2C) . . . . . −0.3 V to 4.5 V
- Output voltage range, V_O (standard LVCMOS) . . . . . −0.3 V to DV_{DD} + 0.5 V
- Output voltage range, V_O (fail-safe LVCMOS) . . . . . −0.3 V to 4.5 V
- Output voltage range, V_O (USB transceivers) . . . . . −0.3 V to DV_{DD} + 0.5 V
- Output voltage range, V_O (I^2C) . . . . . −0.3 V to 4.5 V
- Operating temperature range, T_C . . . . . −40°C to 85°C
- Storage temperature range, T_{stg} . . . . . −55°C to 150°C

5.2 Recommended Operating Conditions

			MIN	NOM	MAX	UNIT
CV_{DD} $CV_{DD1/2/3/4/A}$	Device supply voltage, core†	Low Power Standby mode‡	1	1.1	1.675	V
		Active mode	1.525	1.6	1.675	
DV_{DD1}	Device supply voltage, I/O (Peripheral I/O)		2.5	2.75 or 3.3	3.6	V
DV_{DD2}	Device supply voltage, I/O (USB transceiver)		3	3.3	3.6	V
DV_{DD3}	Device supply voltage, I/O (MCSI2, McBSP2, GPIO[9:8])	Low-voltage range§	1.65	1.8	1.95	V
		High-voltage range§	2.5	2.75 or 3.3	3.6	
DV_{DD4}	Device supply voltage, I/O (SDRAM interface)	Low-voltage range§	1.65	1.8	1.95	V
		High-voltage range§	2.5	2.75 or 3.3	3.6	
DV_{DD5}	Device supply voltage, I/O (FLASH interface)	Low-voltage range§	1.65	1.8	2	V
		High-voltage range§	2.5	2.75 or 3.3	3.6	
$CV_{DD} - DV_{DD}$	Device supply voltage difference¶				1.65	V
$DV_{DD} - CV_{DD}$	Device supply voltage difference¶				2.6	V
V_{SS}	Supply voltage, GND			0		V
V_{IH}	High-level input voltage, I/O	Standard LVCMOS	0.7 DV_{DD}		DV_{DD}	V
		Fail-safe LVCMOS	0.7 DV_{DD}		DV_{DD}	
		USB.DP, DM (mode 1)	2		DV_{DD}	
		I^2C	0.7 DV_{DD}		DV_{DD}	
V_{IL}	Low-level input voltage, I/O	Standard LVCMOS	0		0.3 DV_{DD}	V
		Fail-safe LVCMOS	0		0.3 DV_{DD}	
		USB.DP, DM (mode 1)	0		0.8	
		I^2C	0		0.3 DV_{DD}	
V_I	Input voltage	USB.DP, DM (mode 2)	0.8		2.5	V
		OSC1 and OSC32K pins			CV_{DD}	
V_{ID}	Differential input voltage, I/O	USB.DP, DM (mode 2)	200			mV
I_{OH}	High-level output current	2-mA drive strength buffers			−2	mA
		4-mA drive strength buffers			−4	
		8-mA drive strength buffers			−8	
		18.3-mA drive strength buffers			−18.3	
I_{OL}	Low-level output current	2-mA drive strength buffers			2	mA
		4-mA drive strength buffers			4	
		6-mA drive strength buffers			6	
		8-mA drive strength buffers			8	
		18.3-mA drive strength buffers			18.3	
T_C	Operating case temperature		−40		85	°C

† All core voltage supplies should be tied to the same voltage level (within 0.3 V).
‡ Low Power Standby is defined as follows: the device is in Deep Sleep mode and LOW_PWR = 1. The device runs from 32 kHz clock in this mode.
§ High and low voltage ranges are selectable via software configuration.
¶ In systems where the CV_{DDx} and DV_{DDx} power supplies are ramped at generally the same time (within 500 ms of one another), there are no specific power sequencing requirements for the supplies. The only sequencing requirement is that the maximum voltage difference between CV_{DD} and DV_{DD} is not exceeded for greater than 500 ms. Likewise, if different voltages are used for the separate DV_{DDx} supplies, all DV_{DDx} supplies should be ramp up to valid voltage levels within 500 ms of one another.

5.3 Electrical Characteristics Over Recommended Operating Case Temperature Range (Unless Otherwise Noted)

PARAMETER			TEST CONDITIONS	MIN	TYP	MAX	UNIT
V_{OH}	High-level output voltage	Standard LVCMOS	DV_{DD} = 3.3 V, I_{OH} = MAX	0.8 DV_{DD}			V
		Fail-safe LVCMOS	DV_{DD} = 3.3 V, I_{OH} = MAX	0.8 DV_{DD}			
		USB.DP, DM	I_O = −12 mA	DV_{DD} − 0.5			
V_{OL}	Low-level output voltage	Standard LVCMOS	DV_{DD} = 3.3 V, I_{OL} = MAX			0.22 DV_{DD}	V
		Fail-safe LVCMOS	DV_{DD} = 3.3 V, I_{OL} = MAX			0.22 DV_{DD}	
		USB.DP, DM	I_O = 12 mA			0.5	
		I^2C	Fast mode at 6-mA load			0.6	
			Fast mode at 3-mA load			0.4	
			Standard mode at 3-mA load			0.4	
I_I	Input current	Fail-safe LVCMOS inputs without internal pullups/pulldowns enabled	V_I = V_I MAX to V_I MIN	− 20		20	µA
		Other Inputs without internal pullups/pulldowns enabled	V_I = V_I MAX to V_I MIN	−1		1	
		Input pins with 20-µA pulldowns enabled	DV_{DD} = MAX, V_I = V_{SS} to V_{DD}	6	20	60	
		Input pins with 100-µA pulldowns enabled	DV_{DD} = MAX, V_I = V_{SS} to V_{DD}	30	100	300	
		Input pins with 20-µA pullups enabled	CV_{DD} = MAX, V_I = V_{SS} to V_{DD}	− 60	− 20	− 6	
		Input pins with 100-µA pullups enabled	DV_{DD} = MAX, V_I = V_{SS} to V_{DD}	− 300	− 100	− 30	
I_{OZ}	Input current for outputs in high-impedance			− 20		20	µA
$I_{DDC\ (Q)}$	Core voltage supply current, quiescent		Sum of CV_{DDx} currents. (Deep sleep mode with CV_{DD} = 1.6 V)		210		µA
			Sum of CV_{DDx} currents. (Deep sleep mode with CV_{DD} = 1.1 V)		110		
$I_{DDC\ (A)}$	Core voltage supply current, active		Sum of CV_{DDx} currents (Case 1†).		150		mA
			Sum of CV_{DDx} currents (Case 2‡).		170		mA
$I_{DDCP\ (A)}$	Core and I/O voltage supply current, active		Sum of CV_{DDx} and DV_{DDx} currents (Case 3§).		45		mA
			Sum of CV_{DDx} and DV_{DDx} currents (Case 4¶).		6		mA
C_i	Input capacitance		USB.DP,DM		7		pF
			All other I/O pins		4		
C_O	Output capacitance		USB.DP,DM		7		pF
			All other I/O pins		4		

† Case 1: MPU running OS, DSP running GSM Vocoder from internal memory, DSP MMU and all clock domains active, no LCD activity.
‡ Case 2: Same conditions as Case 1 only DSP running from external memory with I-cache enabled.
§ Case 3: Only LCD activity (MPU and DSP idled with clocks off). LCD running 320x240 TFT at 70 Frames per second with frame buffer in internal memory (DPLL at 120 MHz).
¶ Case 4: Same as Case 3 only LCD running at 10 Frames per second with DPLL at 6MHz.

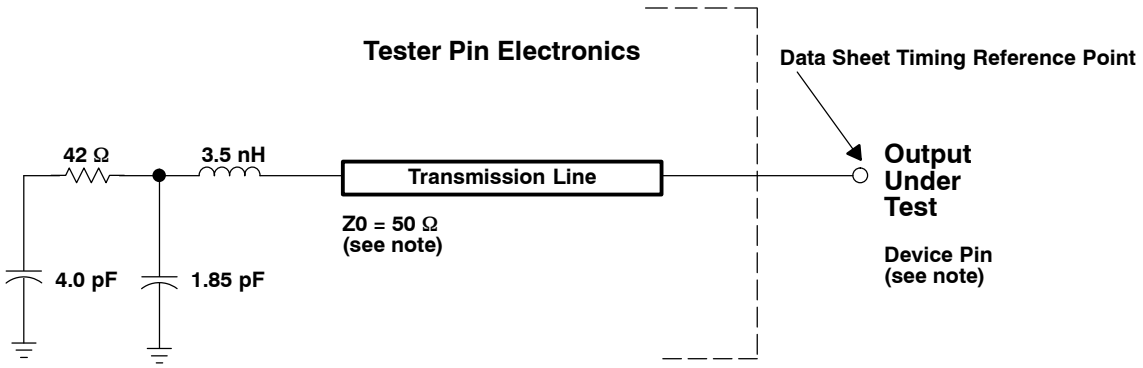

NOTE: The data sheet provides timing at the device pin. For output timing analysis, the tester pin electronics and its transmission line effects must taken into account. A transmission line with a delay of 2 ns or longer can be used to produce the desired transmission line effect. The transmission line is intended as a load only. It is not necessary to add or subtract the transmission line delay (2 ns or longer) from the data sheet timings.

Input requirements in this data sheet are tested with an input slew rate of < 4 Volts per nanosecond (4 V/ns) at the device pin.

Figure 5–1. Tester Pin Electronics

5.4 Package Thermal Resistance Characteristics

Table 5–1 provides the thermal resistance characteristics for the package types available for use on the OMAP5910 device.

Table 5–1. Thermal Resistance Characteristics

$R_{\Theta JA}$ (°C/W)	$R_{\Theta JC}$ (°C/W)	PACKAGE TYPE
32.77	10.76	289GZG
25.54	10.11	289GDY

5.5 Timing Parameter Symbology

Timing parameter symbols used in the timing requirements and switching characteristics tables are created in accordance with JEDEC Standard 100. To shorten the symbols, some of the pin names and other related terminology have been abbreviated as follows:

Lowercase subscripts and their meanings:

a	access time
c	cycle time (period)
d	delay time
dis	disable time
en	enable time
f	fall time
h	hold time
r	rise time
su	setup time
t	transition time
v	valid time
w	pulse duration (width)
X	Unknown, changing, or don't care level

Letters and symbols and their meanings:

H	High
L	Low
V	Valid
Z	High impedance

5.6 Clock Specifications

This section provides the timing requirements and switching characteristics for the OMAP5910 system clock signals.

5.6.1 32-kHz Oscillator and Input Clock

The 32.768-kHz clock signal (often abbreviated to 32-kHz) may be supplied by either the on-chip 32-kHz oscillator (requiring an external crystal) or an external CMOS signal. The state of the CLK32K_CTRL pin determines which is used.

The on-chip oscillator requires an external 32.768-kHz crystal connected across the OSC32K_IN and OSC32K_OUT pins. The connection of the required circuit, consisting of the crystal and two load capacitors, is shown in Figure 5–2. The load capacitors, C_1 and C_2, should be chosen such that the equation below is satisfied (recommended values are $C_1 = C_2 = 10$ pF). C_L in the equation is the load specified for the crystal. All discrete components used to implement the oscillator circuit should be placed as close as possible to the associated oscillator pins (OSC32K_IN and OSC32K_OUT) and to the V_{SS} pin closest to the oscillator pins (GZG ball V12 or GDY ball F6).

NOTE: The 32.768-kHz oscillator is powered by the CV_{DD} supply. If an external clock source is used instead of using the on-chip oscillator, care must be taken that the voltage level driven onto the OSC32K_IN and OSC32K_OUT pins is no greater than the CV_{DD} voltage level.

$$C_L = \frac{C_1 C_2}{(C_1 + C_2)}$$

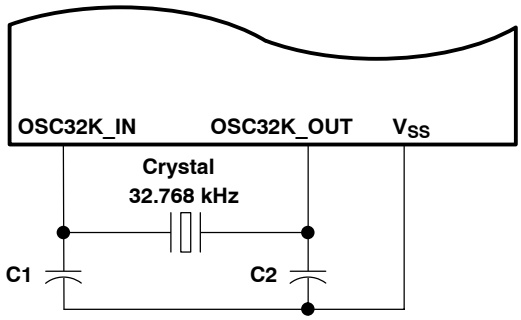

Figure 5–2. 32-kHz Oscillator External Crystal

Table 5–2 shows the switching characteristics of the 32-kHz oscillator and Table 5–3 shows the input requirements of the 32-kHz clock input.

Table 5–2. 32-kHz Oscillator Switching Characteristics

PARAMETER	MIN	TYP	MAX	UNIT
Start-up time (from power up until oscillating at stable frequency of 32.768 kHz)		200	800	ms
I_{DDA}, active current consumption		4		µA
Oscillation frequency		32.768		kHz

Table 5–3. 32-kHz Input Clock Timing Requirements

NO.			MIN	NOM	MAX	UNIT
CK1	t_{cyc}	Frequency		32.768		kHz
CK2	t_f	Fall time			25	ns
CK3	t_r	Rise time			25	ns
CK4		Duty cycle (high-to-low ratio)	30%		70%	%
CK5		Frequency stability	–70		70	ppm

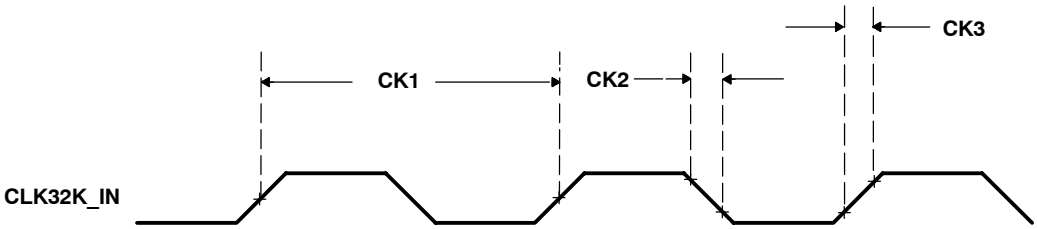

Figure 5–3. 32-kHz Input Clock

5.6.2 Base Oscillator (12 MHz or 13 MHz) and Input Clock

The internal base system oscillator is enabled following a device reset. The oscillator requires an external crystal to be connected across the OSC1_IN and OSC1_OUT pins. If the internal oscillator is not used (configured in software using FUNC_MUX_CTRL_B register), an external clock source must be applied to the OSC1_IN pin and the OSC1_OUT pin must be left unconnected. Because the internal oscillator can be used as a clock source to the OMAP DPLL, the 12- or 13-MHz crystal oscillation frequency can be multiplied to generate the DSP clock, MPU clock, traffic controller clock.

The crystal must be in fundamental-mode operation, and parallel resonant, with a maximum effective series resistance of 60 Ω maximum. The connection of the required circuit, consisting of the crystal and two load capacitors, is shown in Figure 5–4. The load capacitors, C_1 and C_2, must be chosen such that the equation below is satisfied (recommended values are $C_1 = C_2 = 10$ pF). C_L in the equation is the load specified for the crystal. All discrete components used to implement the oscillator circuit must be placed as close as possible to the associated oscillator pins (OSC1_IN and OSC1_OUT) and to the V_{SS} pins closest to the oscillator pins (GZG balls AA1/Y3 or GDY balls E13/K9).

NOTE: The base oscillator is powered by the CV_{DD} supply. If an external clock source is used instead of using the on-chip oscillator, care must be taken that the voltage level driven onto the OSC1_IN pin is no greater than the CV_{DD} voltage level.

$$C_L = \frac{C_1 C_2}{(C_1 + C_2)}$$

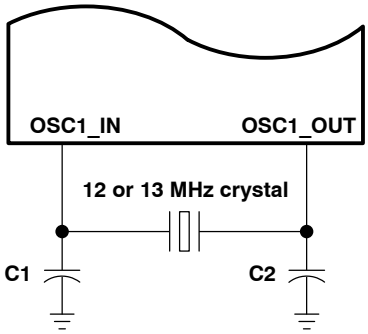

Figure 5–4. Internal System Oscillator External Crystal

If USB host function is used, it is recommended that a very low PPM crystal (≤ 50 ppm) be used for the 12- or 13-MHz oscillator circuit. If the USB host function is not used, then a crystal of ≤ 180 ppm is recommended. When selecting a crystal, the system design must take into account the temperature and aging characteristics of a crystal versus the user environment and expected lifetime of the system.

Table 5–4 shows the switching characteristics of the base oscillator.

Table 5–4. Base Oscillator Switching Characteristics

PARAMETER	MIN	TYP	MAX	UNIT
Start-up time (from power up until oscillating at stable frequency of 12 or 13 MHz)		1	4	ms
I_{DDA}, active current consumption		350		µA
Oscillation frequency		12 or 13		MHz

5.6.3 Internal Clock Speed Limitations

Table 5–5 provides a summary of the maximum frequencies that each clock domain may be configured to run on the OMAP5910 device.

Table 5–5. Internal Clock Speed Limitations

CLOCK	MAX OPERATING FREQUENCY	UNIT
MPU (CLKM1)	150	MHz
DSP (CLKM2)	150	MHz
TC (CLKM3)	75	MHz
DPLL1	150	MHz

All clock domains must be derived from the same DPLL1 frequency setting; therefore, the following conditions must be satisfied where ‘m’, ‘n’, and ‘o’ are each equal to either 1, 2, 4, or 8:

- MPU frequency = (DPLL1 clock frequency) / m
- DSP frequency = (DPLL1 clock frequency) / n
- TC frequency = (DPLL1 clock frequency) / o

For example, the following configuration is valid:

- MPU/DSP/TC = 150 MHz/150 MHz/75 MHz, where m = n = 1 and o = 2

5.7 Reset Timings

This section provides the timing requirements for the OMAP5910 hardware reset signals.

5.7.1 OMAP5910 Device Reset

The $\overline{\text{PWRON_RESET}}$ signal is the active-low asynchronous reset input responsible for the reset of the entire OMAP5910 device. When using an external crystal to supply the 32-kHz system clock, $\overline{\text{PWRON_RESET}}$ must be asserted low a minimum of two 32-kHz clock cycles longer than the worst-case start-up time of the 32-kHz oscillator after stable power supplies (see Figure 5–5). If an external CMOS input signal is used to source 32 kHz, $\overline{\text{PWRON_RESET}}$ must be asserted low a minimum of two 32-kHz clock cycles after stable power supplies. See Table 5–6 and Table 5–7.

Table 5–6. OMAP5910 Device Reset Timing Requirements

NO.			MIN	MAX	UNIT
RS1	$t_{w(PWRON_RST)}$	Pulse duration, $\overline{\text{PWRON_RESET}}$ low	800		ms

Table 5–7. OMAP5910 Device Reset Switching Characteristics†

NO.	PARAMETER		MIN	MAX	UNIT
RS2	$t_{d(PWRONH-RSTH)}$	Delay time, $\overline{\text{PWRON_RESET}}$ high to $\overline{\text{RST_OUT}}$ high		T + 10	µs

† P = period of 32-kHz clock, C = Value of ULPD wakeup time setup register, SETUP_ULPD1_REG (Default 03FFh), T = P*C

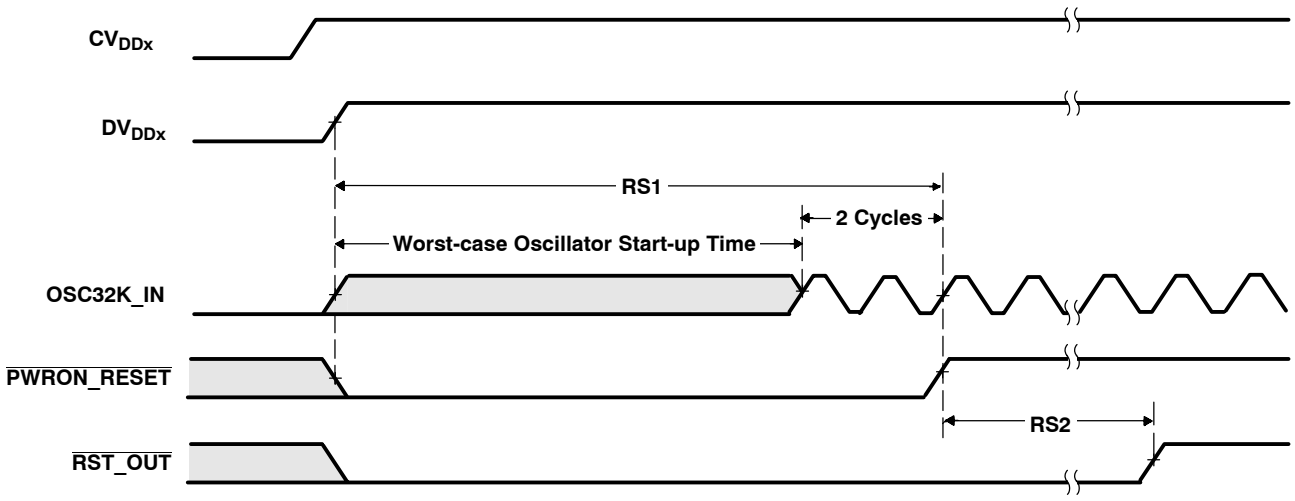

Figure 5–5. Device Reset Timings

5.7.2 OMAP5910 MPU Core Reset

The $\overline{\text{MPU_RST}}$ signal is the active-low asynchronous input responsible for the reset of the OMAP5910 MPU core. Stable power supplies are assumed prior to $\overline{\text{MPU_RST}}$ assertion. Table 5−6 illustrates the behavior of $\overline{\text{MPU_RST}}$ and $\overline{\text{RST_OUT}}$. In Table 5−7, a logic high level is assumed on the $\overline{\text{PWRON_RESET}}$ input. In the case where an application ties the $\overline{\text{PWRON_RESET}}$ and $\overline{\text{MPU_RST}}$ together, the behavior described in Section 5.7.1, *OMAP5910 Device Reset*, will override. See Table 5−8 and Table 5−9.

Table 5−8. $\overline{\text{MPU_RST}}$ Timing Requirements

NO.			MIN	MAX	UNIT
M3	$t_{w(MPU_RST)}$	Pulse duration, $\overline{\text{MPU_RST}}$ low	50		µs

Table 5−9. $\overline{\text{MPU_RST}}$ Switching Characteristics†

NO.	PARAMETER			MIN	MAX	UNIT
M1	$t_{d(MPUL-RSTL)}$	Delay time, $\overline{\text{MPU_RST}}$ low to $\overline{\text{RST_OUT}}$ low			1	µs
M2	$t_{d(MPUH-RSTH)}$	Delay time, $\overline{\text{MPU_RST}}$ high to $\overline{\text{RST_OUT}}$ high	$\overline{\text{MPU_RST}}$ asserted during OMAP5910 awake state		10	µs
			$\overline{\text{MPU_RST}}$ asserted during OMAP5910 deep sleep state		T + 10	

† P = period of 32-kHz clock, C = Value of ULPD wakeup time setup register, SETUP_ULPD1_REG (Default 03FFh), T = P*C

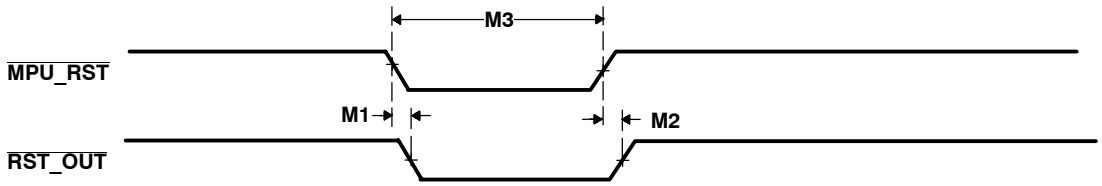

Figure 5−6. MPU Core Reset Timings

5.8 External Memory Interface Timing

5.8.1 EMIFS/Flash Interface Timing

Table 5−10 and Table 5−11 assume testing over recommended operating conditions (see Figure 5−7 through Figure 5−11).

Table 5−10. EMIFS/Flash Interface Timing Requirements

NO.				DV_{DD5} = 1.8 V Nominal		DV_{DD5} = 2.75 V Nominal		DV_{DD5} = 3.3 V Nominal		UNIT
				MIN	MAX	MIN	MAX	MIN	MAX	
F6	$t_{su(DV-CLKH)}$	Setup time, read data valid before FLASH.CLK high	Async modes†	9		9		9		ns
			Sync Modes†	3		3		3		ns
F7	$t_{h(CLKH-RDV)}$	Hold time, read data valid after FLASH.CLK high	Async modes†	0		0		0		ns
			Sync Modes‡	2		2		2		ns

† The external FLASH.CLK is disabled for async modes. Async modes are only supported with the RT bit in the EMIFS configuration register set to 0.

‡ Sync modes are only supported with the RT bit in the EMIFS configuration register set to 1.

Table 5–11. EMIFS/Flash Interface Switching Characteristics

NO.	PARAMETER			DV_{DD5} = 1.8 V Nominal		DV_{DD5} = 2.75 V Nominal		DV_{DD5} = 3.3 V Nominal		UNIT
				MIN	MAX	MIN	MAX	MIN	MAX	
F1	$t_{d(CLKH-CSV)}$	Delay time, FLASH.CLK high to $\overline{\text{FLASH.CSx}}$ transition	Async Modes†	1	24	1	21	1	11	ns
			Sync Modes	–1	12	–1	10	–1	11	
F2	$t_{d(CLKH-BEV)}$	Delay time, FLASH.CLK high to $\overline{\text{FLASH.BEx}}$ valid	Async Modes†	1	24	1	21	1	20	ns
			Sync Modes	–1	12	–1	10	–1	11	
F3	$t_{d(CLKH-BEIV)}$	Delay time, FLASH.CLK high to $\overline{\text{FLASH.BEx}}$ invalid	Async Modes†	1	24	1	21	1	20	ns
			Sync Modes	–1	12	–1	10	–1	11	
F4	$t_{d(CLKH-AV)}$	Delay time, FLASH.CLK high to address valid	Async Modes†	1	24	1	21	1	20	ns
			Sync Modes	–1	8	0	7	0	7	
F5	$t_{d(CLKH-AIV)}$	Delay time, FLASH.CLK high to address invalid	Async Modes†	1	24	1	21	1	20	ns
			Sync Modes	–1	8	0	7	0	7	
F8	$t_{d(CLKH-ADV)}$	Delay time, FLASH.CLK high to $\overline{\text{FLASH.ADV}}$ transition	Async Modes†	1	24	1	21	1	20	ns
			Sync Modes	–1	12	–1	10	–1	11	
F9	$t_{d(CLKH-OEV)}$	Delay time, FLASH.CLK high to $\overline{\text{FLASH.OE}}$ transition	Async Modes†	1	24	1	21	1	20	ns
			Sync Modes	–1	12	–1	10	–1	11	
F12	$t_{d(CLKH-WEV)}$	Delay time, FLASH.CLK high to $\overline{\text{FLASH.WE}}$ transition	Async Modes†	1	24	1	21	1	20	ns
			Sync Modes	–1	12	–1	10	–1	11	
F13	$t_{d(CLKH-WDV)}$	Delay time, FLASH.CLK high to write data valid	Async Modes†	1	24	1	21	1	20	ns
			Sync Modes	1	22	1	20	1	18	
F14	$t_{d(CLKH-WDIV)}$	Delay time, FLASH.CLK high to write data invalid	Async Modes†	1	24	1	21	1	20	ns
			Sync Modes	1	22	1	20	1	18	
F15	$t_{d(CLKH-DHZ)}$	Delay time, FLASH.CLK high to data bus high-impedance†			24		21		20	ns
F16	$t_{d(CLKH-DLZ)}$	Delay time, FLASH.CLK high to data bus driven		1	24	1	21	1	20	ns
F17	$t_{d(CLKH-BAAV)}$†	Delay time, FLASH.CLK high to $\overline{\text{FLASH.BAA}}$ transition‡		–1 + 0.5P	8 + 0.5P	–1 + 0.5P	7.5 + 0.5P	–1 + 0.5P	7.5 + 0.5P	ns

† Data is referenced to the internal FLASH.CLK. The external FLASH.CLK is disabled for async modes.
‡ P = period of undivided Traffic Controller clock regardless of FLASH.CLK divider configuration

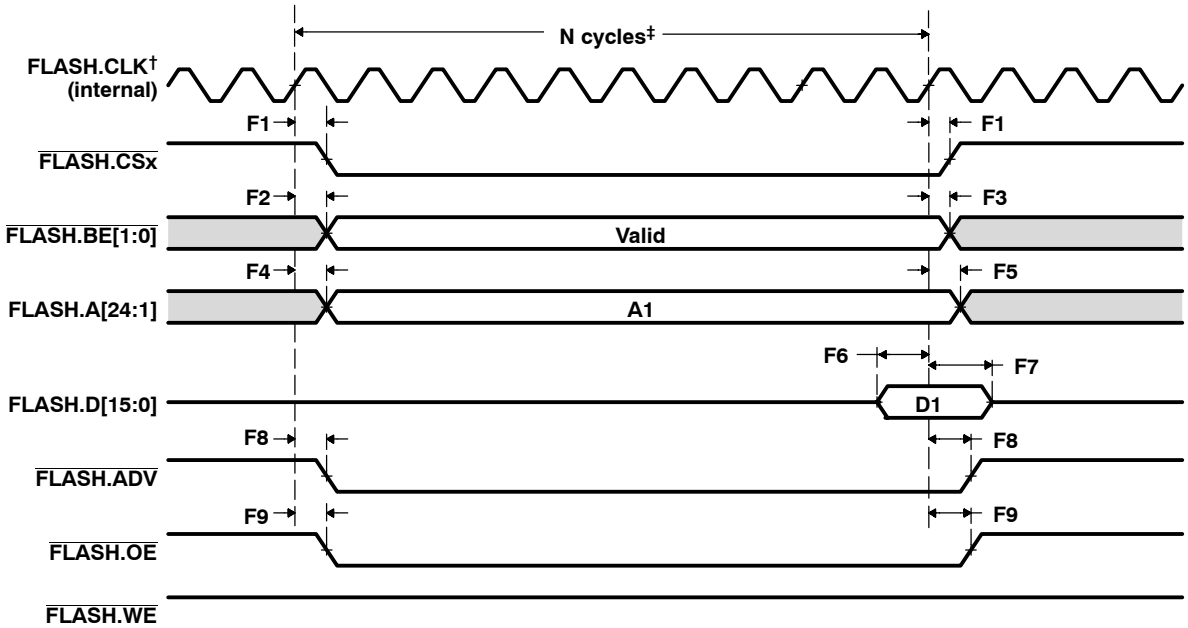

† FLASH.CLK is not driven during this mode of operation. The signal shown represents the internal FLASH.CLK signal given as a reference to express relative timings.

‡ Number of cycles is configurable via EMIFS setup registers.

Figure 5–7. Asynchronous Memory Read Timing

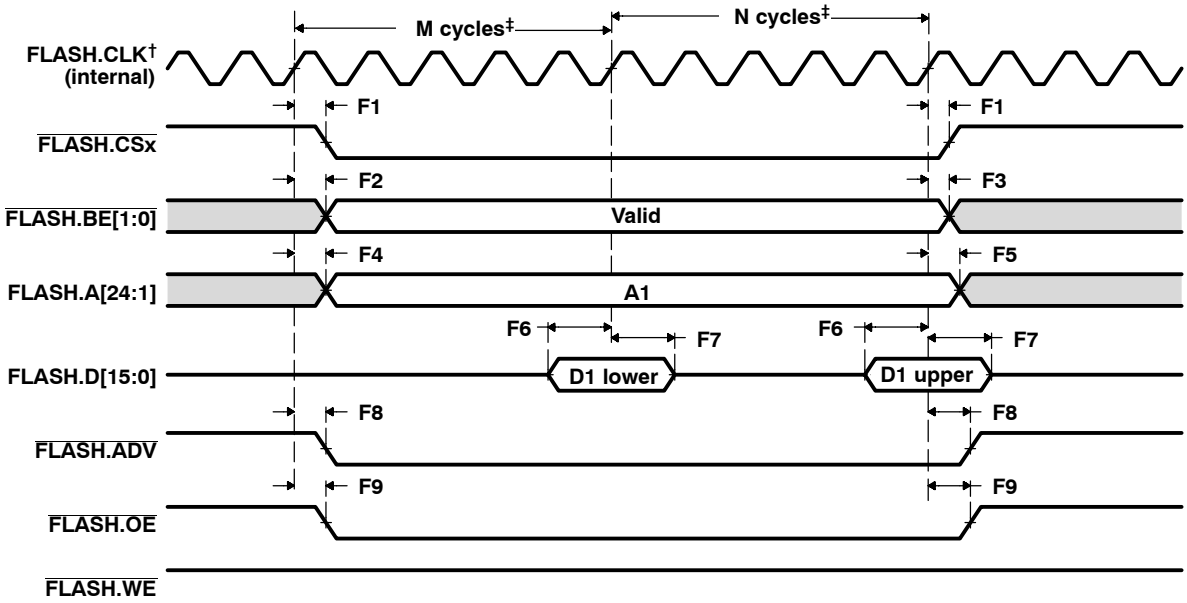

† FLASH.CLK is not driven during this mode of operation. The signal shown represents the internal FLASH.CLK signal given as a reference to express relative timings.
‡ Number of cycles is configurable via EMIFS setup registers.

Figure 5–8. Asynchronous 32-Bit Read

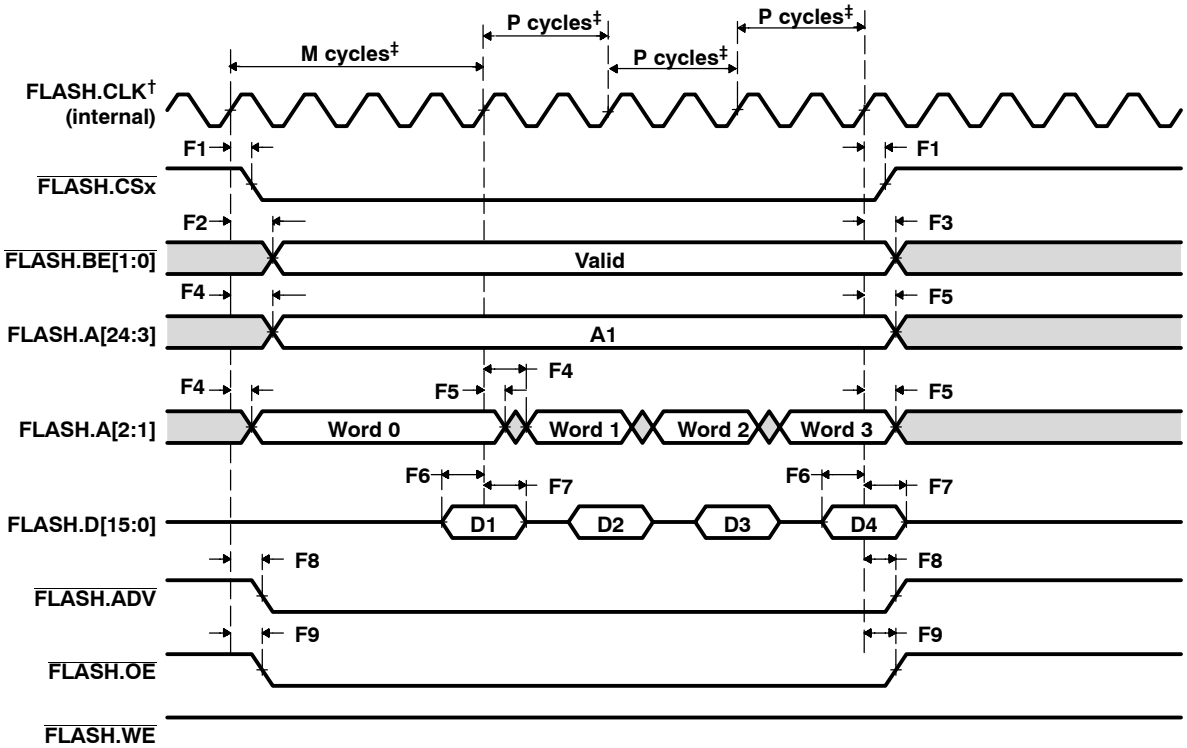

† FLASH.CLK is not driven during this mode of operation. The signal shown represents the internal FLASH.CLK signal given as a reference to express relative timings.

‡ Number of cycles is configurable via EMIFS setup registers.

Figure 5–9. Asynchronous Read – Page Mode ROM

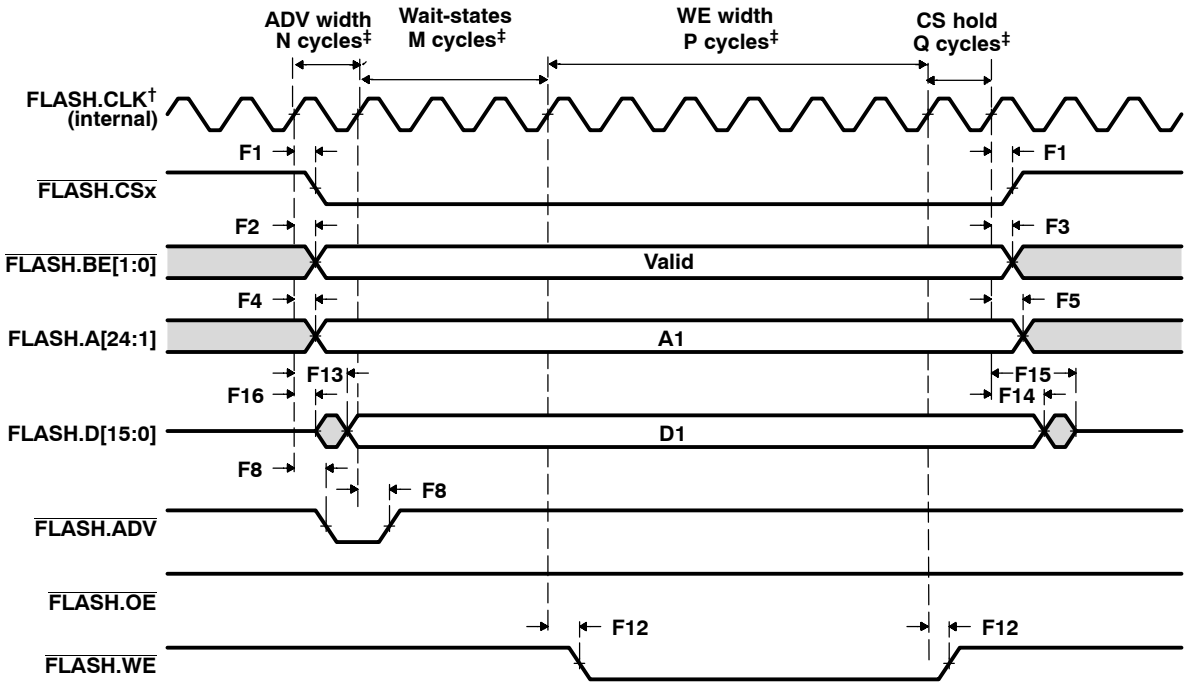

† FLASH.CLK is not driven during this mode of operation. The signal shown represents the internal FLASH.CLK signal given as a reference to express relative timings.

‡ Number of cycles is configurable via EMIFS setup registers.

Figure 5–10. Asynchronous Memory Write Timing

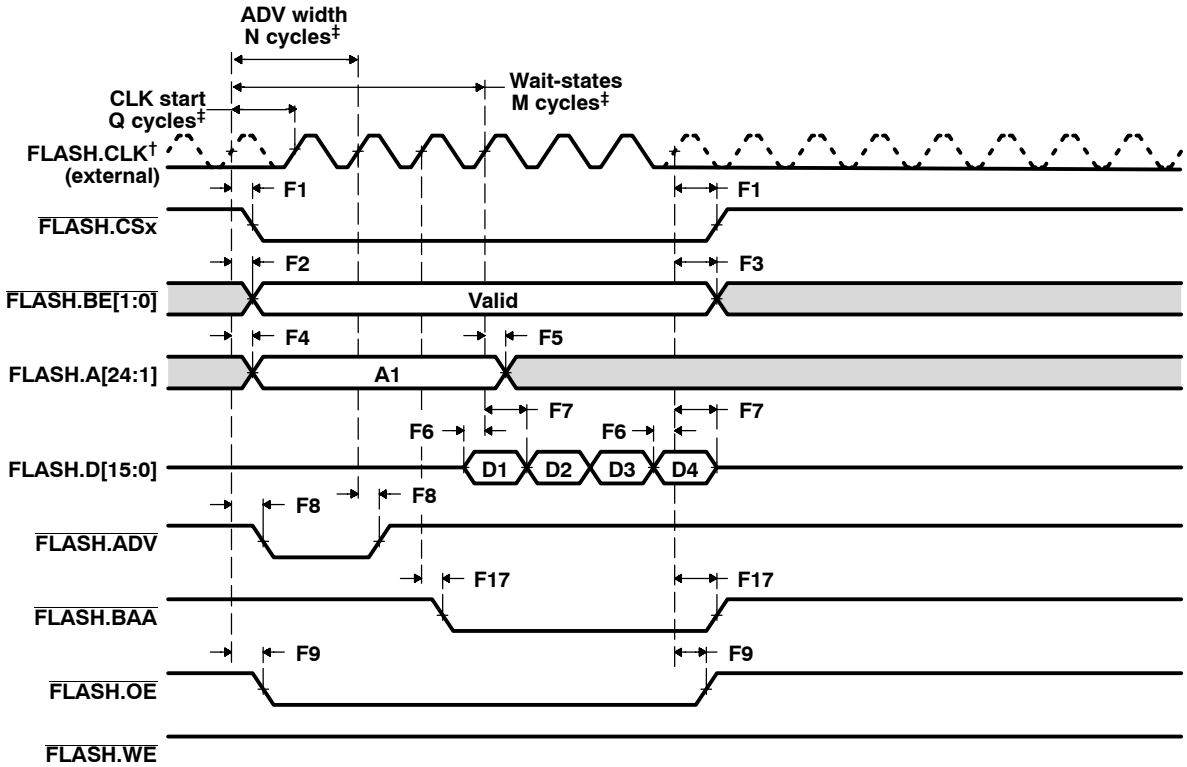

† FLASH.CLK is only driven during the active portion of the cycle. For reference, the dashed line shows FLASH.CLK as if it were continuous.
‡ Number of cycles is configurable via EMIFS setup registers.

Figure 5–11. Synchronous Burst Read

5.8.2 EMIFF/SDRAM Interface Timing

Table 5–12 and Table 5–13 assume testing over recommended operating conditions (see Figure 5–12 through Figure 5–17).

Table 5–12. EMIFF/SDRAM Interface Timing Requirements†

NO.			DV_{DD4} = 1.8 V Nominal		DV_{DD4} = 2.75 V Nominal		DV_{DD4} = 3.3 V Nominal		UNIT
			MIN	MAX	MIN	MAX	MIN	MAX	
SD7	$t_{su(DV-CLKH)}$	Setup time, read data valid before SDRAM.CLK high	2		2		2		ns
SD8	$t_{h(CLKH-DV)}$	Hold time, read data valid after SDRAM.CLK high	1		1		1		ns

† Timing requirements are with the SD_RET field equal to 1 in the EMIFF configuration register.

Table 5–13. EMIFF/SDRAM Interface Switching Characteristics

NO.	PARAMETER		DV_{DD4} = 1.8 V Nominal		DV_{DD4} = 2.75 V Nominal		DV_{DD4} = 3.3 V Nominal		UNIT
			MIN	MAX	MIN	MAX	MIN	MAX	
SD1	$t_{c(CLK)}$	Cycle time, SDRAM.CLK	H‡		H‡		H‡		ns
SD2	$t_{w(CLK)}$	Pulse duration, SDRAM.CLK high/low	2.5		2.5		2.5		ns
SD3	$t_{d(CLKH-DQMV)}$	Delay time, SDRAM.CLK high to $\overline{\text{SDRAM.DQMx}}$ valid	1.5	9	1.5	9	1.5	9	ns
SD4	$t_{d(CLKH-DQMIV)}$	Delay time, SDRAM.CLK high to $\overline{\text{SDRAM.DQMx}}$ invalid	1.5	9	1.5	9	1.5	9	ns
SD5	$t_{d(CLKH-AV)}$	Delay time, SDRAM.CLK high to SDRAM.A[12:0] address valid	1.5	9	1.5	9	1.5	9	ns
SD6	$t_{d(CLKH-AIV)}$	Delay time, SDRAM.CLK high to SDRAM.A[12:0] address invalid	1.5	9	1.5	9	1.5	9	ns
SD9	$t_{d(CLKH-SDCASL)}$	Delay time, SDRAM.CLK high to $\overline{\text{SDRAM.CAS}}$ low	1.5	9	1.5	9	1.5	9	ns
SD10	$t_{d(CLKH-SDCASH)}$	Delay time, SDRAM.CLK high to $\overline{\text{SDRAM.CAS}}$ high	1.5	9	1.5	9	1.5	9	ns
SD11	$t_{d(CLKH-DV)}$	Delay time, SDRAM.CLK high to SDRAM.D[15:0] data valid	1.5	9	1.5	9	1.5	9	ns
SD12	$t_{d(CLKH-DIV)}$	Delay time, SDRAM.CLK high to SDRAM.D[15:0] data invalid	1.5	9	1.5	9	1.5	9	ns
SD13	$t_{d(CLKH-SDWEL)}$	Delay time, SDRAM.CLK high to $\overline{\text{SDRAM.WE}}$ low	1.5	9	1.5	9	1.5	9	ns
SD14	$t_{d(CLKH-SDWEH)}$	Delay time, SDRAM.CLK high to $\overline{\text{SDRAM.WE}}$ high	1.5	9	1.5	9	1.5	9	ns
SD15	$t_{d(CLKH-BAV)}$	Delay time, SDRAM.CLK high to SDRAM.BA[1:0] valid	1.5	9	1.5	9	1.5	9	ns
SD16	$t_{d(CLKH-BAIV)}$	Delay time, SDRAM.CLK high to SDRAM.BA[1:0] invalid	1.5	9	1.5	9	1.5	9	ns
SD17	$t_{d(CLKH-RASL)}$	Delay time, SDRAM.CLK high to $\overline{\text{SDRAM.RAS}}$ low	1.5	9	1.5	9	1.5	9	ns
SD18	$t_{d(CLKH-RASH)}$	Delay time, SDRAM.CLK high to $\overline{\text{SDRAM.RAS}}$ high	1.5	9	1.5	9	1.5	9	ns

‡ H = 1/2 CPU cycle.

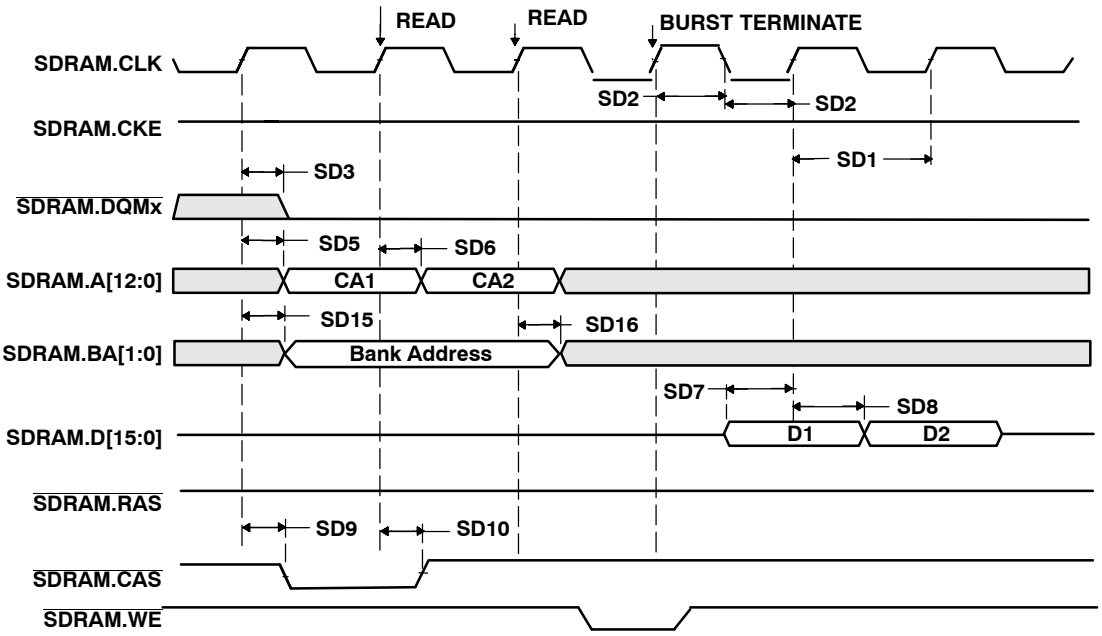

Figure 5–12. 32-Bit (2 x 16-Bit) SDRAM RD (Read) Command (Active Row)

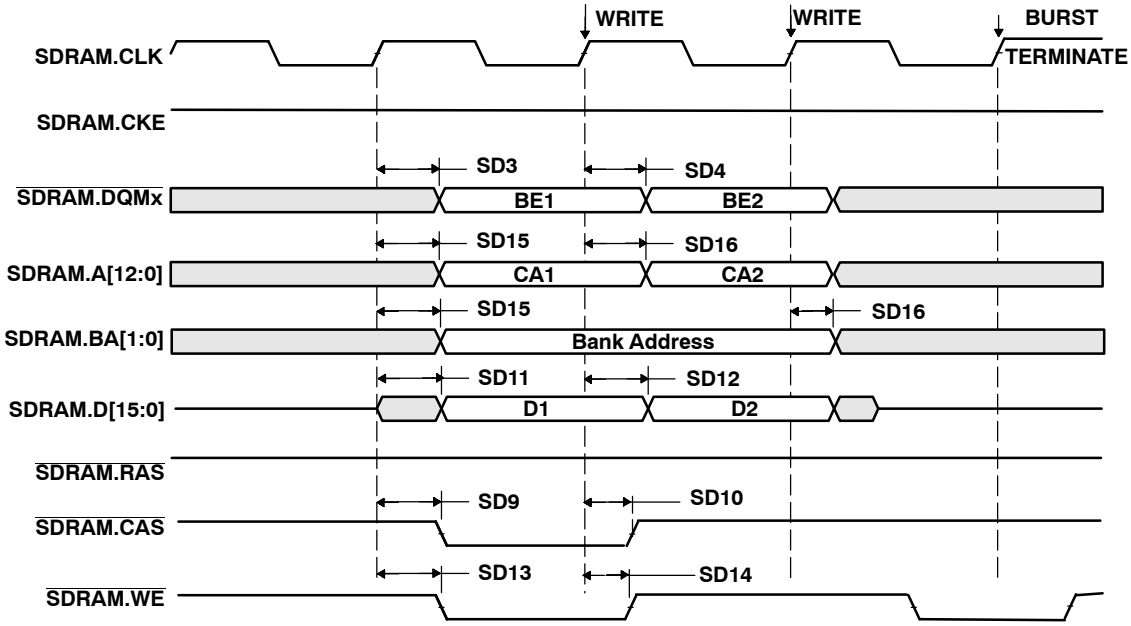

Figure 5–13. 32-Bit (2 x 16-Bit) SDRAM WRT (Write) Command (Active Row)

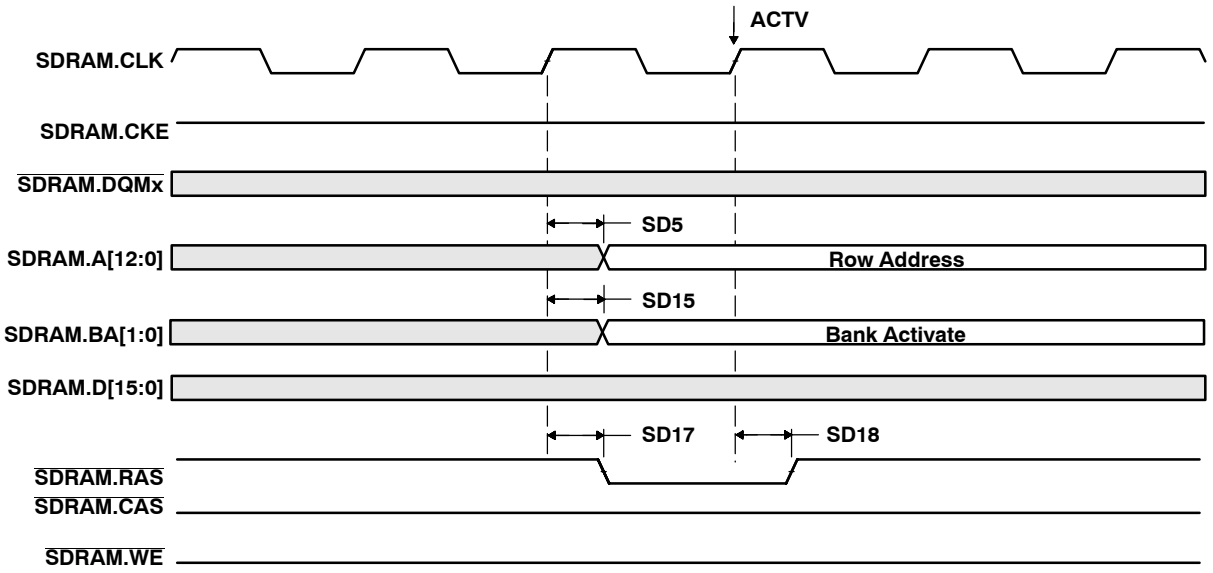

Figure 5–14. SDRAM ACTV (Activate Row) Command

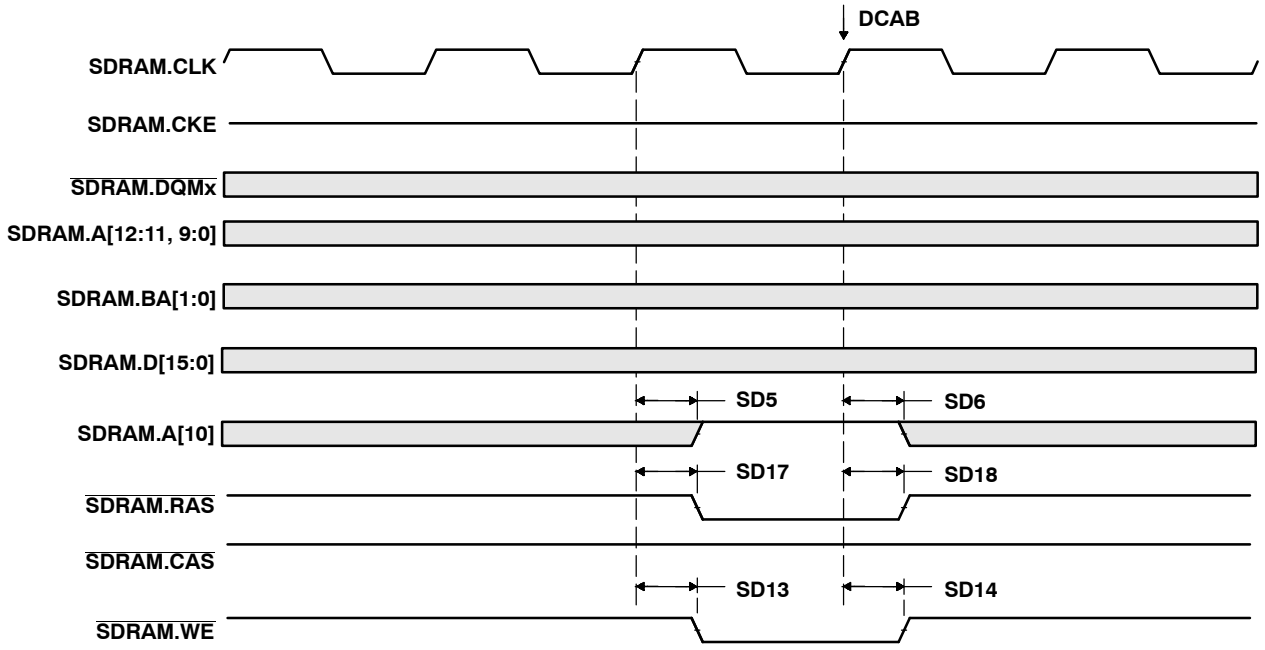

Figure 5–15. SDRAM DCAB (Precharge/Deactivate Row) Command

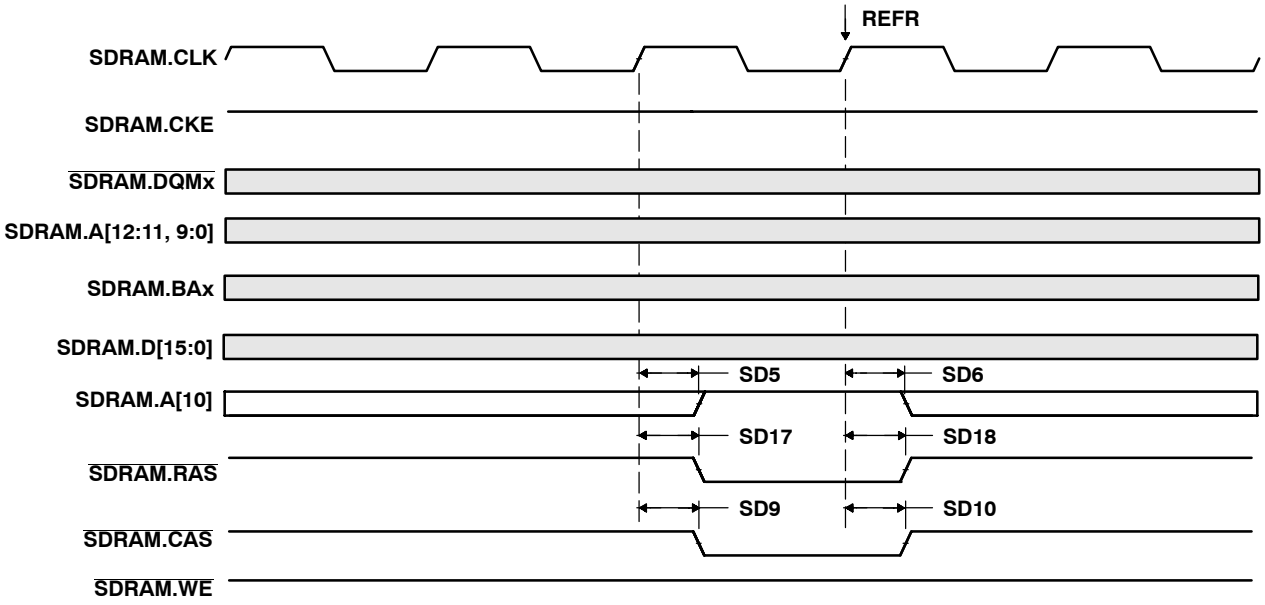

Figure 5–16. SDRAM REFR (Refresh) Command

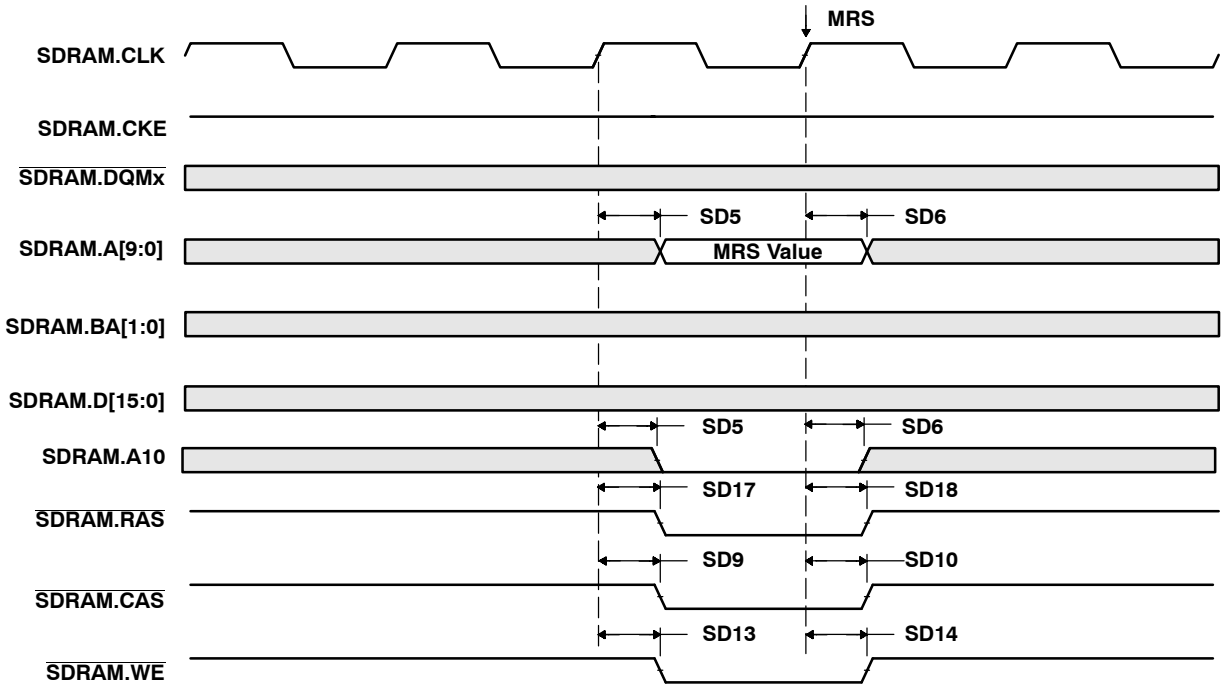

Figure 5–17. SDRAM MRS (Mode Register Set) Command

5.9 Multichannel Buffered Serial Port (McBSP) Timings

5.9.1 McBSP Transmit and Receive Timings

Table 5−14 and Table 5−15 assume testing over recommended operating conditions (see Figure 5−18 and Figure 5−19). In Table 5−14 and Table 5−15, “ext” indicates that the device pin is configured as an input (slave) driven by an external device and “int” indicates that the pin is configured as an output (master).

Table 5−14. McBSP Timing Requirements†‡

NO.					MIN	MAX	UNIT
M11	$t_{c(CKRX)}$	Cycle time, CLKR/X		CLKR/X ext	2P		ns
M12	$t_{w(CKRX)}$	Pulse duration, CLKR/X high or CLKR/X low		CLKR/X ext	0.45P		ns
M13	t_r	Rise time, CLKR/X, MCBSP2.FSR/X	McBSP1	CLKR/X ext		12	ns
			McBSP2	CLKR/X ext, MCBSP2.FSR/X ext		12	
			McBSP3	CLKR/X ext		6	
M14	t_f	Fall time, CLKR/X, MCBSP2.FSR/X	McBSP1	CLKR/X ext		12	ns
			McBSP2	CLKR/X ext, MCBSP2.FSR/X ext		12	
			McBSP3	CLKR/X ext		6	
M15	$t_{su(FRH-CKRL)}$	Setup time, external receiver frame sync (FSR/X) high before CLKR/X low§	McBSP1 (FSX)	CLKX int§	25		ns
				CLKX ext§	31		
			McBSP2 (FSR)	CLKR int	25		
				CLKR ext	7		
			McBSP3 (FSX)	CLKX int§	24		
				CLKX ext§	15		
M16	$t_{h(CKRL-FRH)}$	Hold time, external receiver frame sync (FSR/X) high after CLKR/X low§	McBSP1 (FSX)	CLKX int§	3		ns
				CLKX ext§	16		
			McBSP2 (FSR)	CLKR int	3		
				CLKR ext	3		
			McBSP3 (FSX)	CLKX int§	13		
				CLKX ext§	13		
M17	$t_{su(DRV-CKRL)}$	Setup time, DR valid before CLKR/X low§	McBSP1	CLKX int§	21		ns
				CLKX ext§	3		
			McBSP2	CLKR int	22		
				CLKR ext	3		
			McBSP3	CLKX int§	19		
				CLKX ext§	10		

† Polarity bits CLKRP = CLKXP = FSRP = FSXP = 0. If the polarity of any of the signals is inverted, then the timing references of that signal are also inverted.

‡ Regardless of whether MCBSP.CLKS is internally or externally clocked, P = 1/(DSPXOR_CK) for McBSP1 and McBSP3, and P= 1/(AMPER_CK) for McBSP2. See the *OMAP5910 Dual−Core Processor Clock Generation and System Reset Management Reference Guide* (literature number SPRU678) for additional details.

§ For McBSP1 and McBSP2, the receiver clock and frame sync inputs are driven by FSX and CLKX via internal loopback connections enabled via software configuration.

Table 5–14. McBSP Timing Requirements†‡ (Continued)

NO.					MIN	MAX	UNIT
M18	$t_{h(CKRL-DRV)}$	Hold time, DR valid after CLKR/X low§	McBSP1	CLKX int§	3		ns
				CLKX ext§	3		
			McBSP2	CLKR int	3		
				CLKR ext	3		
			McBSP3	CLKX int§	3		
				CLKX ext§	3		
M19	$t_{su(FXH-CKXL)}$	Setup time, external FSX high before CLKX low	McBSP1	CLKX int	30		ns
				CLKX ext	25		
			McBSP2	CLKX int	28		
				CLKX ext	27		
			McBSP3	CLKX int	28		
				CLKX ext	27		
M20	$t_{h(CKXL-FXH)}$	Hold time, external FSX high after CLKX low	McBSP1	CLKX int	3		ns
				CLKX ext	10		
			McBSP2	CLKX int	3		
				CLKX ext	3		
			McBSP3	CLKX int	3		
				CLKX ext	3		

† Polarity bits CLKRP = CLKXP = FSRP = FSXP = 0. If the polarity of any of the signals is inverted, then the timing references of that signal are also inverted.

‡ Regardless of whether MCBSP.CLKS is internally or externally clocked, P = 1/(DSPXOR_CK) for McBSP1 and McBSP3, and P= 1/(AMPER_CK) for McBSP2. See the *OMAP5910 Dual–Core Processor Clock Generation and System Reset Management Reference Guide* (literature number SPRU678) for additional details.

§ For McBSP1 and McBSP2, the receiver clock and frame sync inputs are driven by FSX and CLKX via internal loopback connections enabled via software configuration.

Table 5–15. McBSP Switching Characteristics†‡§

NO.	PARAMETER				MIN	MAX	UNIT
M0	$t_{d(CKSH-CKRXH)}$	Delay time, CLKS high to CLKR/X high for internal CLKR/X generated from CLKS input	McBSP1	CLKR/X int	2	33	ns
M1	$t_{c(CKRX)}$	Cycle time, CLKR/X		CLKR/X int	2P		ns
M2	$t_{w(CKRXH)}$	Pulse duration, CLKR/X high		CLKR/X int	0.45D	0.55D	ns
M3	$t_{w(CKRXL)}$	Pulse duration, CLKR/X low		CLKR/X int	0.45C	0.55C	ns
M4	$t_{d(CKRH-FRV)}$	Delay time, CLKR high to internal FSR valid	McBSP2	CLKR int	–1	13	ns
				CLKR ext	–3	24	ns
M5	$t_{d(CKXH-FXV)}$	Delay time, CLKX high to internal FSX valid	McBSP1	CLKX int	–4	13	ns
				CLKX ext	7	39	
			McBSP2	CLKX int	–1	4	
				CLKX ext	2	24	
			McBSP3	CLKX int	–1	9	
				CLKX ext	2	37	
M7	$t_{d(CKXH-DXV)}$	Delay time, CLKX high to DX valid. This applies to all bits except the first bit transmitted when in Data Delay 0 (XDATDLY=00b) mode.	McBSP1	CLKX int	–2	7	ns
				CLKX ext	7	40	
			McBSP2	CLKX int	0	10	
				CLKX ext	3	27	
			McBSP3	CLKX int	–1	10	
				CLKX ext	1	16	
M9	$t_{d(FXH-DXV)}$	Delay time, FSX high to DX valid¶ Only applies to first bit transmitted when in Data Delay 0 (XDATDLY=00b) mode.	McBSP1	FSX int		28	ns
				FSX ext		25	
			McBSP2	FSX int		30	
				FSX ext		27	
			McBSP3	FSX int		10	
				FSX ext		27	

† Polarity bits CLKRP = CLKXP = FSRP = FSXP = 0. If the polarity of any of the signals is inverted, then the timing references of that signal are also inverted.

‡ P = 1/(Base frequency) for McBSP 1 and 3, or 1/(ARMPER_CK clock frequency) in ns for McBSP 2. Base frequency is 12 or 13 MHz.

§ T=CLKRX period = (1 + CLKGDV) * P
C=CLKRX low pulse width = T/2 when CLKGDV is odd or zero and = (CLKGDV/2) * P when CLKGDV is even
D=CLKRX high pulse width = T/2 when CLKGDV is odd or zero and = (CLKGDV/2 + 1) * P when CLKGDV is even

¶ Only DXENA=0 is supported for all OMAP5910 McBSPs.

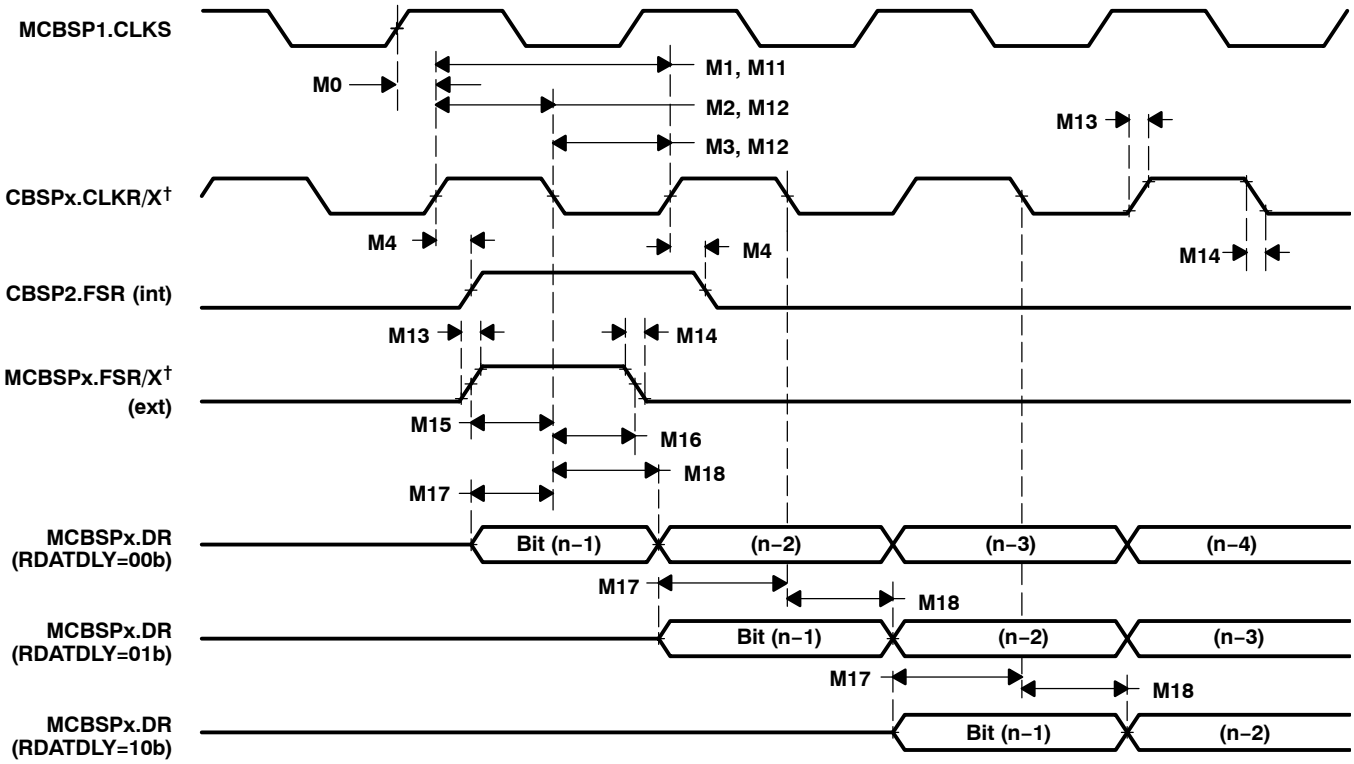

† For McBSP1 and McBSP3, the receiver clock and frame sync inputs are driven by FSX and CLKX via internal loopback connections enabled via software configuration. The M13 and M14 descriptors are applicable only to McBSP2.

Figure 5−18. McBSP Receive Timings

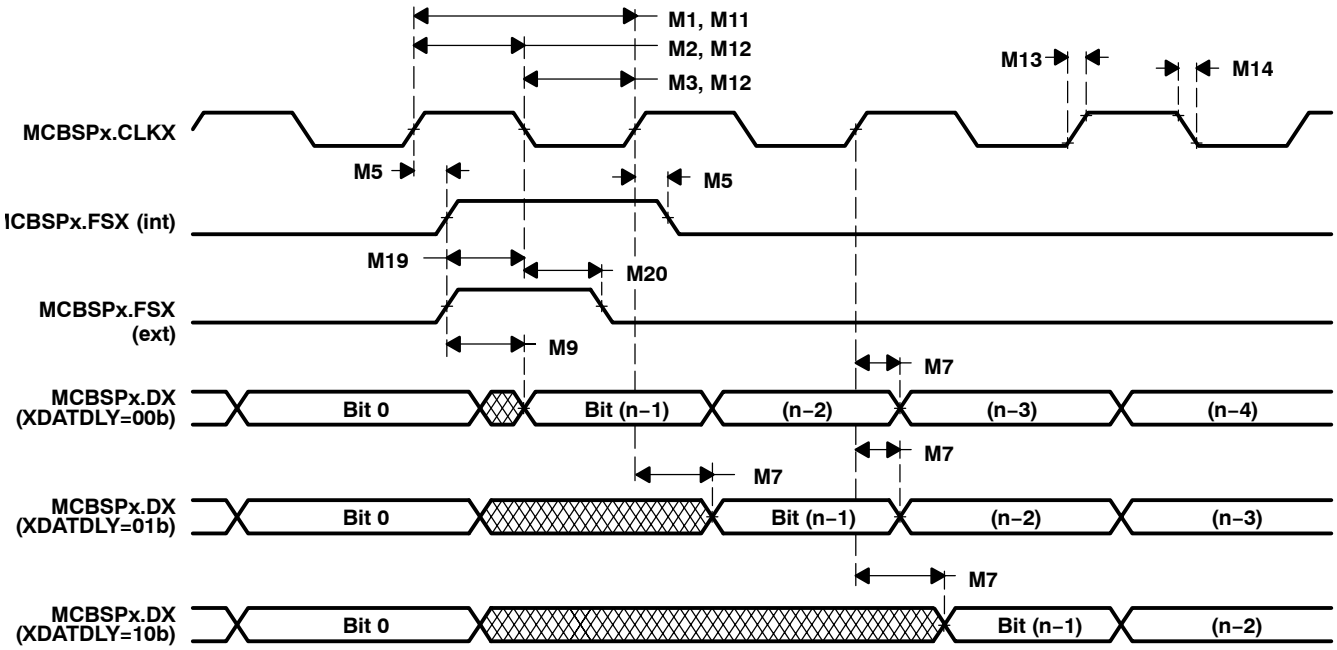

Figure 5−19. McBSP Transmit Timings

5.9.2 McBSP as SPI Master or Slave Timing

Table 5−16 to Table 5−23 assume testing over recommended operating conditions (see Figure 5−20 through Figure 5−23).

Table 5−16. McBSP as SPI Master or Slave Timing Requirements (CLKSTP = 10b, CLKXP = 0)†‡

NO.				MASTER		SLAVE		UNIT
				MIN	MAX	MIN	MAX	
M30	$t_{su(DRV-CKXL)}$	Setup time, MCBSPx.DR valid before MCBSPx.CLKX low		15		2 − 6P		ns
M31	$t_{h(CKXL-DRV)}$	Hold time, MCBSPx.DR valid after MCBSPx.CLKX low		2		6 + 6P		ns
M32	$t_{su(BFXL-CKXH)}$	Setup time, MCBSPx.FSX low before MCBSPx.CLKX high	McBSP1			21		ns
			McBSP2			5		
			McBSP3			10		
M33	$t_{c(CKX)}$	Cycle time, MCBSPx.CLKX		2P		16P		ns

† For all SPI slave modes, CLKG is programmed as 1/2 of the internal reference clock by setting CLKSM = CLKGDV = 1.
‡ P = 1/(Base frequency) for McBSP 1 and 3, or 1/(ARMPER_CK clock frequency) in ns for McBSP 2. Base frequency is 12 or 13 MHz.

Table 5−17. McBSP as SPI Master or Slave Switching Characteristics (CLKSTP = 10b, CLKXP = 0)†‡

NO.	PARAMETER		MASTER§		SLAVE		UNIT
			MIN	MAX	MIN	MAX	
M24	$t_{h(CKXL-FXL)}$	Hold time, MCBSPx.FSX low after MCBSPx.CLKX low¶	0.45T	0.55T			ns
M25	$t_{d(FXL-CKXH)}$	Delay time, MCBSPx.FSX low to MCBSPx.CLKX high#	0.45C	0.55C			ns
M26	$t_{d(CKXH-DXV)}$	Delay time, MCBSPx.CLKX high to MCBSPx.DX valid	−1	7	3P + 2	5P+ 18	ns
M29	$t_{d(FXL-DXV)}$	Delay time, MCBSPx.FSX low to MCBSPx.DX valid				4P + 18	ns

† For all SPI slave modes, CLKG is programmed as 1/2 of the internal reference clock by setting CLKSM = CLKGDV = 1.
‡ P = 1/(Base frequency) for McBSP 1 and 3, or 1/(ARMPER_CK clock frequency) in ns for McBSP 2. Base frequency is 12 or 13 MHz.
§ T = CLKX period = (1 + CLKGDV) * P
C = CLKX low pulse width = T/2 when CLKGDV is odd or zero and = (CLKGDV/2) * P when CLKGDV is even
¶ FSRP = FSXP = 1. As a SPI master, MCBSPx.FSX is inverted to provide active-low slave-enable output. As a slave, the active-low signal input on MCBSPx.FSX and MCBSPx.FSR is inverted before being used internally.
CLKXM = FSXM = 1, CLKRM = FSRM = 0 for master McBSP
CLKXM = CLKRM = FSXM = FSRM = 0 for slave McBSP
# MCBSPx.FSX should be low before the rising edge of clock to enable slave devices and then begin a SPI transfer at the rising edge of the master clock (MCBSPx.CLKX).

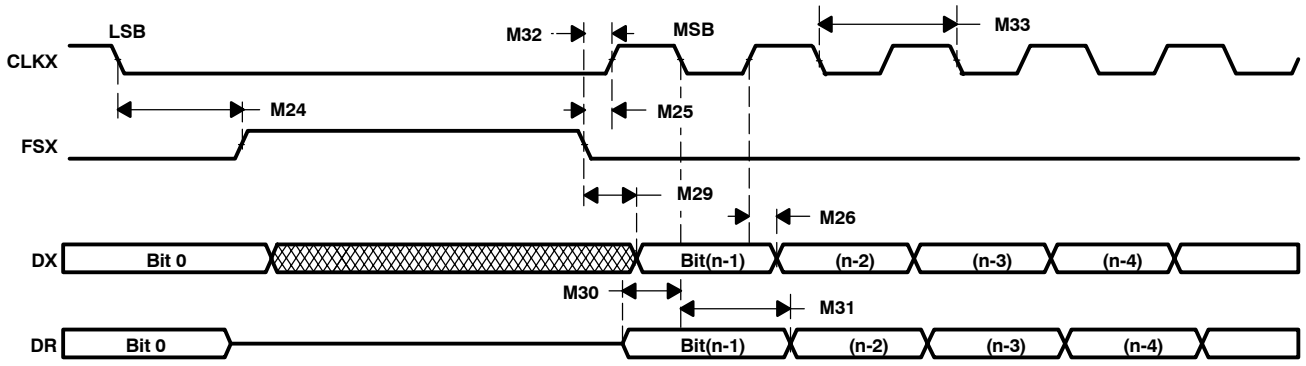

Figure 5−20. McBSP Timing as SPI Master or Slave: CLKSTP = 10b, CLKXP = 0

Table 5–18. McBSP as SPI Master or Slave Timing Requirements (CLKSTP = 11b, CLKXP = 0)†‡

NO.				MASTER		SLAVE		UNIT
				MIN	MAX	MIN	MAX	
M39	$t_{su(DRV-CKXH)}$	Setup time, MCBSPx.DR valid before MCBSPx.CLKX high		15		2 – 6P		ns
M40	$t_{h(CKXH-DRV)}$	Hold time, MCBSPx.DR valid after MCBSPx.CLKX high		2		6 +6P		ns
M41	$t_{su(FXL-CKXH)}$	Setup time, MCBSPx.FSX low before MCBSPx.CLKX high	McBSP1			21		ns
			McBSP2			5		
			McBSP3			10		
M42	$t_{c(CKX)}$	Cycle time, MCBSPx.CLKX		2P		16P		ns

† For all SPI slave modes, CLKG is programmed as 1/2 of the internal reference clock by setting CLKSM = CLKGDV = 1.
‡ P = 1/(Base frequency) for McBSP 1 and 3, or 1/(ARMPER_CK clock frequency) in ns for McBSP 2. Base frequency is 12 or 13 MHz.

Table 5–19. McBSP as SPI Master or Slave Switching Characteristics (CLKSTP = 11b, CLKXP = 0)†‡

NO.	PARAMETER		MASTER§		SLAVE		UNIT
			MIN	MAX	MIN	MAX	
M34	$t_{h(CKXL-FXL)}$	Hold time, MCBSPx.FSX low after MCBSPx.CLKX low¶	0.45C	0.55C			ns
M35	$t_{d(FXL-CKXH)}$	Delay time, MCBSPx.FSX low to MCBSPx.CLKX high#	0.45T	0.55T			ns
M36	$t_{d(CKXL-DXV)}$	Delay time, MCBSPx.CLKX low to MCBSPx.DX valid	–1	7	3P + 2	5P + 18	ns
M38	$t_{d(FXL-DXV)}$	Delay time, MCBSPx.FSX low to MCBSPx.DX valid		D +20		4P + 18	ns

† For all SPI slave modes, CLKG is programmed as 1/2 of the internal reference clock by setting CLKSM = CLKGDV = 1.
‡ P = 1/(Base frequency) for McBSP 1 and 3, or 1/(ARMPER_CK clock frequency) in ns for McBSP 2. Base frequency is 12 or 13 MHz.
§ T = CLKX period = (1 + CLKGDV) * P
C = CLKX low pulse width = T/2 when CLKGDV is odd or zero and = (CLKGDV/2) * P when CLKGDV is even
D = CLKX high pulse width = T/2 when CLKGDV is odd or zero and = (CLKGDV/2 + 1) * P when CLKGDV is even
¶ FSRP = FSXP = 1. As a SPI master, MCBSPx.FSX is inverted to provide active-low slave-enable output. As a slave, the active-low signal input on MCBSPx.FSX and MCBSPx.FSR is inverted before being used internally.
CLKXM = FSXM = 1, CLKRM = FSRM = 0 for master McBSP
CLKXM = CLKRM = FSXM = FSRM = 0 for slave McBSP
# MCBSPx.FSX should be low before the rising edge of clock to enable slave devices and then begin a SPI transfer at the rising edge of the master clock (MCBSPx.CLKX).

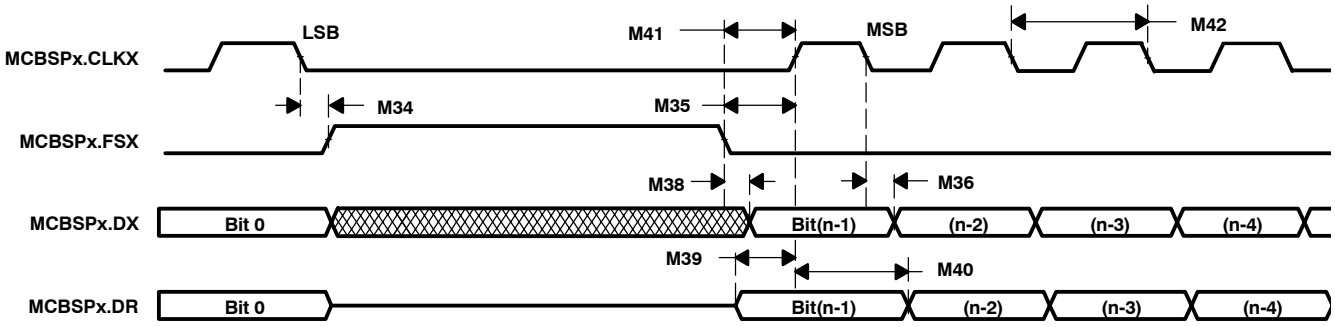

Figure 5–21. McBSP Timing as SPI Master or Slave: CLKSTP = 11b, CLKXP = 0

Table 5–20. McBSP as SPI Master or Slave Timing Requirements (CLKSTP = 10b, CLKXP = 1)†‡

NO.			MIN	MASTER		SLAVE		UNIT
				MIN	MAX	MIN	MAX	
M49	$t_{su(DRV-CKXH)}$	Setup time, MCBSPx.DR valid before MCBSPx.CLKX high		15		2 – 2P		ns
M50	$t_{h(CKXH-DRV)}$	Hold time, MCBSPx.DR valid after MCBSPx.CLKX high		2		6 + 6P		ns
M51	$t_{su(FXL-CKXL)}$	Setup time, MCBSPx.FSX low before MCBSPx.CLKX low	McBSP1			21		ns
			McBSP2			5		
			McBSP3			10		
M52	$t_{c(CKX)}$	Cycle time, MCBSPx.CLKX		2P		16P		ns

† For all SPI slave modes, CLKG is programmed as 1/2 of the CPU clock by setting CLKSM = CLKGDV = 1.
‡ P = 1/(Base frequency) for McBSP 1 and 3, or 1/(ARMPER_CK clock frequency) in ns for McBSP 2. Base frequency is 12 or 13 MHz.

Table 5–21. McBSP as SPI Master or Slave Switching Characteristics (CLKSTP = 10b, CLKXP = 1)†‡

NO.	PARAMETER		MASTER§		SLAVE		UNIT
			MIN	MAX	MIN	MAX	
M43	$t_{h(CKXH-FXL)}$	Hold time, MCBSPx.FSX low after MCBSPx.CLKX high¶	0.45T	0.55T			ns
M44	$t_{d(FXL-CKXL)}$	Delay time, MCBSPx.FSX low to MCBSPx.CLKX low#	0.45D	0.55D			ns
M45	$t_{d(CKXL-DXV)}$	Delay time, MCBSPx.CLKX low to MCBSPx.DX valid	–1	7	3P + 2	5P + 18	ns
M48	$t_{d(FXL-DXV)}$	Delay time, MCBSPx.FSX low to MCBSPx.DX valid				4P + 18	ns

† For all SPI slave modes, CLKG is programmed as 1/2 of the internal reference clock by setting CLKSM = CLKGDV = 1.
‡ P = 1/(Base frequency) for McBSP 1 and 3, or 1/(ARMPER_CK clock frequency) in ns for McBSP 2. Base frequency is 12 or 13 MHz.
§ T = CLKX period = (1 + CLKGDV) * P
D = CLKX high pulse width = T/2 when CLKGDV is odd or zero and = (CLKGDV/2 + 1) * P when CLKGDV is even
¶ FSRP = FSXP = 1. As a SPI master, MCBSPx.FSX is inverted to provide active-low slave-enable output. As a slave, the active-low signal input on MCBSPx.FSX and MCBSPx.FSR is inverted before being used internally.
CLKXM = FSXM = 1, CLKRM = FSRM = 0 for master McBSP
CLKXM = CLKRM = FSXM = FSRM = 0 for slave McBSP
# MCBSPx.FSX should be low before the rising edge of clock to enable slave devices and then begin a SPI transfer at the rising edge of the master clock (MCBSPx.CLKX).

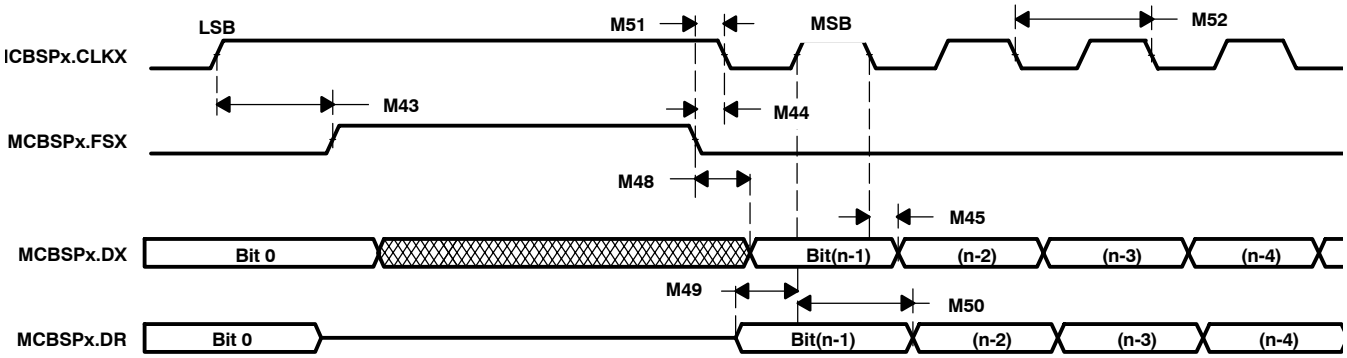

Figure 5–22. McBSP Timing as SPI Master or Slave: CLKSTP = 10b, CLKXP = 1

Table 5–22. McBSP as SPI Master or Slave Timing Requirements (CLKSTP = 11b, CLKXP = 1)†‡

NO.			MIN	MASTER		SLAVE		UNIT
				MIN	MAX	MIN	MAX	
M58	$t_{su(DRV-CKXL)}$	Setup time, MCBSPx.DR valid before MCBSPx.CLKX low		15		2 – 6P		ns
M59	$t_{h(CKXL-DRV)}$	Hold time, MCBSPx.DR valid after MCBSPx.CLKX low		2		6 + 6P		ns
M60	$t_{su(FXL-CKXL)}$	Setup time, MCBSPx.FSX low before MCBSPx.CLKX low	McBSP1			21		ns
			McBSP2			5		
			McBSP3			10		
M61	$t_{c(CKX)}$	Cycle time, MCBSPx.CLKX		2P		16P		ns

† For all SPI slave modes, CLKG is programmed as 1/2 of the internal reference clock by setting CLKSM = CLKGDV = 1.
‡ P = 1/(Base frequency) for McBSP 1 and 3, or 1/(ARMPER_CK clock frequency) in ns for McBSP 2. Base frequency is 12 or 13 MHz.

Table 5–23. McBSP as SPI Master or Slave Switching Characteristics (CLKSTP = 11b, CLKXP = 1)†‡

NO.	PARAMETER		MASTER§		SLAVE		UNIT
			MIN	MAX	MIN	MAX	
M53	$t_{h(CKXH-FXL)}$	Hold time, MCBSPx.FSX low after MCBSPx.CLKX high¶	0.45D	0.55D			ns
M54	$t_{d(FXL-CKXL)}$	Delay time, MCBSPx.FSX low to MCBSPx.CLKX low#	0.45T	0.55T			ns
M55	$t_{d(CKXH-DXV)}$	Delay time, MCBSPx.CLKX high to MCBSPx.DX valid	–1	7	3P + 2	5P + 18	ns
M57	$t_{d(FXL-DXV)}$	Delay time, MCBSPx.FSX low to MCBSPx.DX valid		C + 20		4P + 18	ns

† For all SPI slave modes, CLKG is programmed as 1/2 of the internal reference clock by setting CLKSM = CLKGDV = 1.
‡ P = 1/(Base frequency) for McBSP 1 and 3, or 1/(ARMPER_CK clock frequency) in ns for McBSP 2. Base frequency is 12 or 13 MHz.
§ T = CLKX period = (1 + CLKGDV) * P
C = CLKX low pulse width = T/2 when CLKGDV is odd or zero and = (CLKGDV/2) * P when CLKGDV is even
D = CLKX high pulse width = T/2 when CLKGDV is odd or zero and = (CLKGDV/2 + 1) * P when CLKGDV is even
¶ FSRP = FSXP = 1. As a SPI master, MCBSPx.FSX is inverted to provide active-low slave-enable output. As a slave, the active-low signal input on MCBSPx.FSX and MCBSPx.FSR is inverted before being used internally.
CLKXM = FSXM = 1, CLKRM = FSRM = 0 for master McBSP
CLKXM = CLKRM = FSXM = FSRM = 0 for slave McBSP
# MCBSPx.FSX should be low before the rising edge of clock to enable slave devices and then begin a SPI transfer at the rising edge of the master clock (MCBSPx.CLKX).

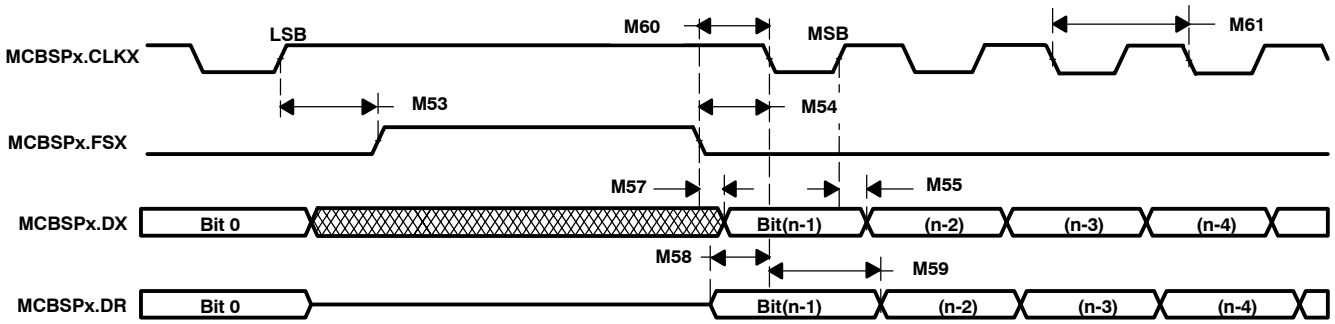

Figure 5–23. McBSP Timing as SPI Master or Slave: CLKSTP = 11b, CLKXP = 1

5.10 Multichannel Serial Interface (MCSI)

Table 5−24 and Table 5−25 assume testing over recommended operating conditions (see Figure 5−24 and Figure 5−25).

Table 5−24. MCSI Timing Requirements

NO.				MIN	MAX	UNIT
MC11	$f_{op(CLK)}$	Operating frequency, MCSIx.CLK	Slave		B‡	MHz
MC12	$t_{w(CLKH)}$	Pulse duration, MCSIx.CLK high	Slave	0.45P†	0.55P†	ns
MC13	$t_{w(CLKL)}$	Pulse duration, MCSIx.CLK low	Slave	0.45P†	0.55P†	ns
MC14	$t_{r(CLK)}$	Rise time, MCSIx.CLK	Slave		12	ns
MC15	$t_{f(CLK)}$	Fall time, MCSIx.CLK	Slave		12	ns
MC16	$t_{su(FSH-CLKL)}$	Setup time, external MCSIx.SYNC high before MCSIx.CLK low	Slave	18		ns
MC17	$t_{h(CLKL-FSH)}$	Hold time, external MCSIx.SYNC high after MCSIx.CLK low	Slave	6		ns
MC18	$t_{su(DIV-CLKL)}$	Setup time, MCSIx.DIN valid before MCSIx.CLK low	Master	27		ns
			Slave	18		
MC19	$t_{h(CLKL-DIV)}$	Hold time, MCSIx.DIN valid after MCSIx.CLK low	Master	0		ns
			Slave	6		

† P = MCSIx.CLK period [$t_{c(CLK)}$] in nanoseconds.
‡ B = Base frequency for OMAP5910 (12 or 13 MHz).

Table 5−25. MCSI Switching Characteristics

NO.	PARAMETER			MIN	MAX	UNIT
MC1	$f_{op(CLK)}$	Operating frequency, MCSIx.CLK	Master		0.5B‡	MHz
MC2	$t_{w(CLKH)}$	Pulse duration, MCSIx.CLK high	Master	0.45P†	0.55P†	ns
MC3	$t_{w(CLKL)}$	Pulse duration, MCSIx.CLK low	Master	0.45P†	0.55P†	ns
MC4	$t_{d(CLKH-FS)}$	Delay time, MCSIx.CLK high to MCSIx.SYNC transition	Master	0	5	ns
MC7	$t_{d(CLKH-DOV)}$	Delay time, MCSIx.CLK high to MCSIx.DOUT valid	Master	0	5	ns
			Slave	2	30	
MC8	$t_{en(CLKH-DO)}$	Enable time, MCSIx.DOUT driven from MCSIx.CLK high	Master	0		ns
			Slave	2		

† P = MCSIx.CLK period [$t_{c(CLK)}$] in nanoseconds.
‡ B = Base frequency for OMAP5910 (12 or 13 MHz).

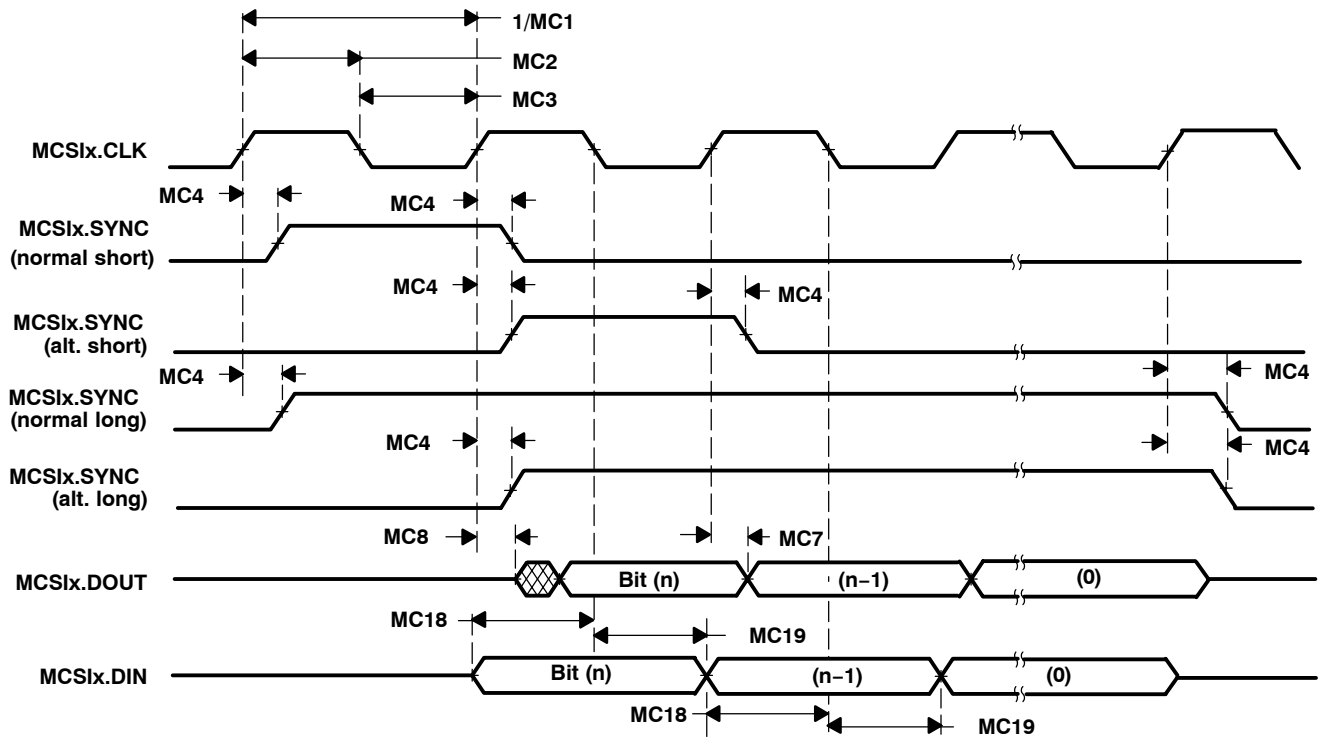

Figure 5–24. MCSI Master Mode Timings

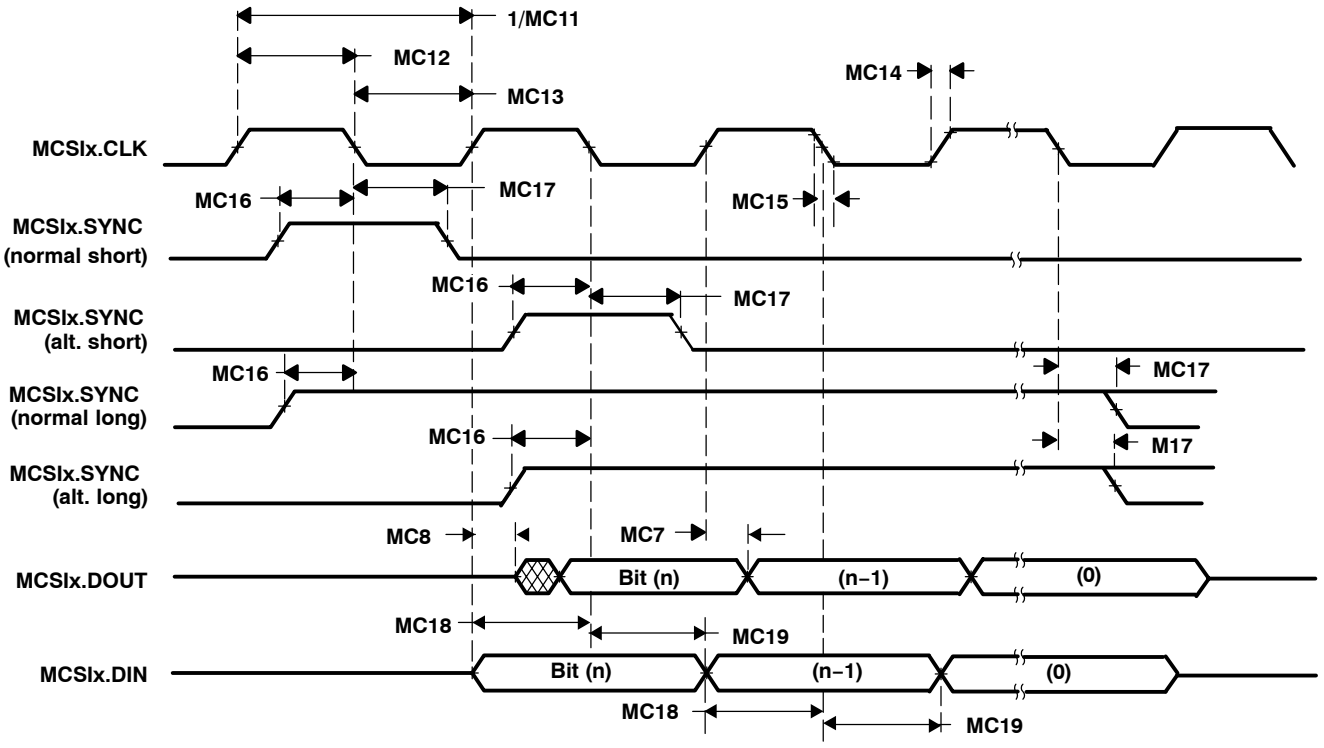

Figure 5–25. MCSI Slave Mode Timings

5.11 Camera Interface Timings

Table 5−26 assumes testing over recommended operating conditions (see Figure 5−26).

Table 5−26. Camera Interface Timing Requirements

NO.			MIN	MAX	UNIT
C1	1 / [$t_{c(LCKH-HSV)}$]	Operating frequency, CAM.LCLK		13	MHz
C2	1 / [$t_{c(XCKH-HSV)}$]	Operating frequency, CAM.EXCLK		24	MHz
C3	$t_{w(LCK)}$	Pulse duration, CAM.LCLK high or low	0.45P†	0.55P†	ns
C5	$t_{su(LCKH-DV)}$	Setup time, CAM.D[7:0] data valid before CAM.LCLK high	1‡		ns
C6	$t_{h(DV-LCKH)}$	Hold time, CAM.D[7:0] data valid after CAM.LCLK high	9‡		ns
C7	$t_{su(LCKH-DV)}$	Setup time, CAM.VS/CAM.HS active before CAM.LCLK high	1‡		ns
C8	$t_{h(DV-CLKH)}$	Hold time, CAM.VS/CAM.HS active after CAM.LCLK high	9‡		ns

† P = period of CAM.LCLK in nanoseconds (ns).
‡ Polarity of CAM.LCLK is selectable via the POLCLK bit in the CTRLCLOCK register. Although data is latched on rising CAM.LCLK in the timing diagrams, these timing parameters also apply to falling CAM.LCLK when POLCLK = 1.

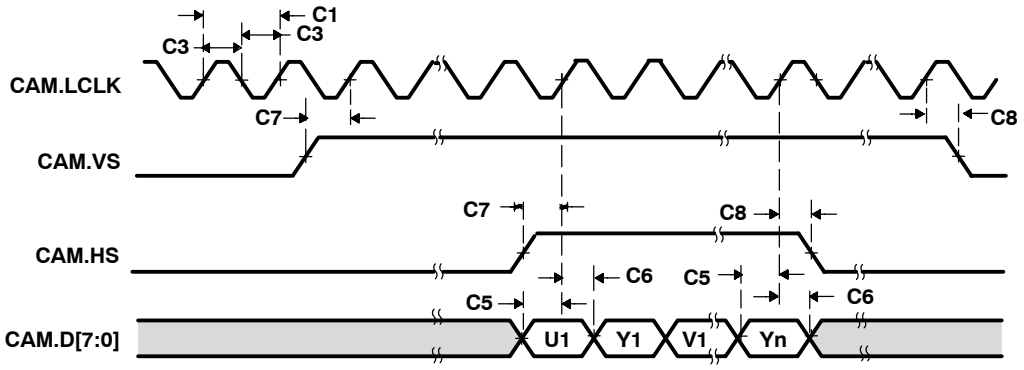

Figure 5−26. Camera Interface Timings

5.12 LCD Controller Timings

Table 5−27 assumes testing over recommended operating conditions (see Figure 5−27 and Figure 5−28).

Table 5−27. LCD Controller Switching Characteristics †

NO.	PARAMETER		MIN	MAX	UNIT
L1	$t_{d(CLKH-HSV)}$	Delay time, LCD.PCLK high to LCD.HS transition	1	11	ns
L2	$t_{d(CLKL-HSV)}$	Delay time, LCD.PCLK low to LCD.HS transition	1	11	ns
L3	$t_{d(CLKH-VSV)}$	Delay time, LCD.PCLK high to LCD.VS transition	1	11	ns
L4	$t_{d(CLKL-VSV)}$	Delay time, LCD.PCLK low to LCD.VS transition	1	11	ns
L5	$t_{d(CLKH-PV)}$	Delay time, LCD.PCLK high to pixel data valid (LCD.P[15:0])		11	ns
L6	$t_{d(CLKH-PIV)}$	Delay time, LCD.PCLK high to pixel data invalid (LCD.P[15:0])	1		ns
L7	$t_{d(CLKL-PV)}$	Delay time, LCD.PCLK low to pixel data valid (LCD.P[15:0])		11	ns
L8	$t_{d(CLKL-PIV)}$	Delay time, LCD.PCLK low to pixel data invalid (LCD.P[15:0])	1		ns
L9	$t_{d(CLKL-ACV)}$	Delay time, LCD.PCLK high to LCD.AC transition	1	5+P‡	ns
L10	$t_{d(CLKL-ACV)}$	Delay time, LCD.PCLK low to LCD.AC transition	1	5+P‡	ns

† Although timing diagrams illustrate the logical function of the TFT mode, static timings apply to all supported modes of operation. Likewise, LCD.HS, LCD.VS, and LCD.AC are shown as active-low, but each may optionally be configured as active-high.
‡ P = period of internal undivided pixel clock

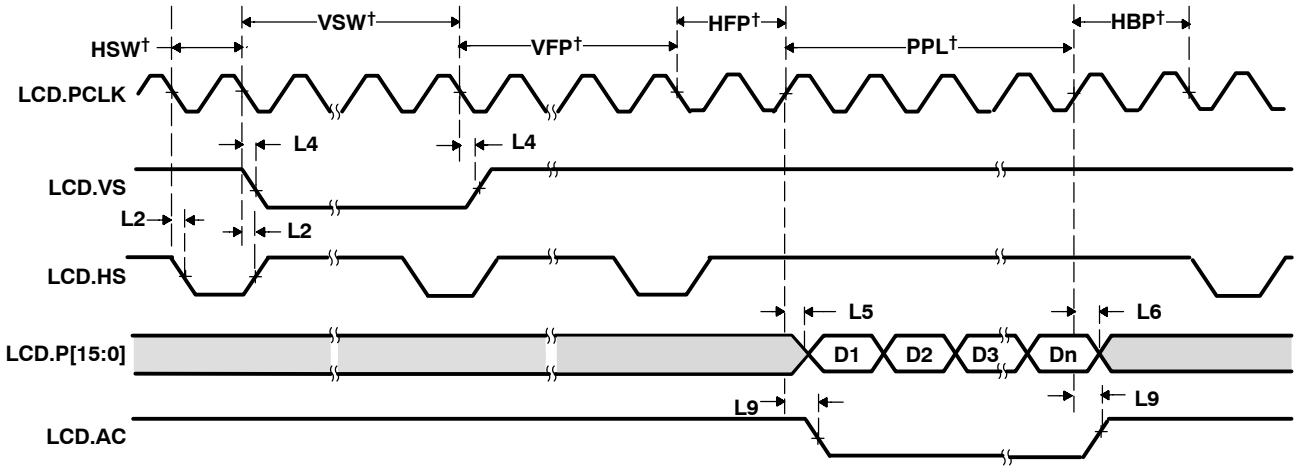

† Delays for HSW (LCD.HS Width), VSW (LCD.VS Width), VFP (Vertical Front Porch), HFP (Horizontal Front Porch), HBP (Horizontal Back Porch) and PPL (Pixels per Line) are programmable in number of LCD.PCLK cycles via the LCD configuration registers.

Figure 5−27. TFT Mode (LCD.HS/LCD.VS on Falling and LCD.Px on Rising LCD.PCLK)

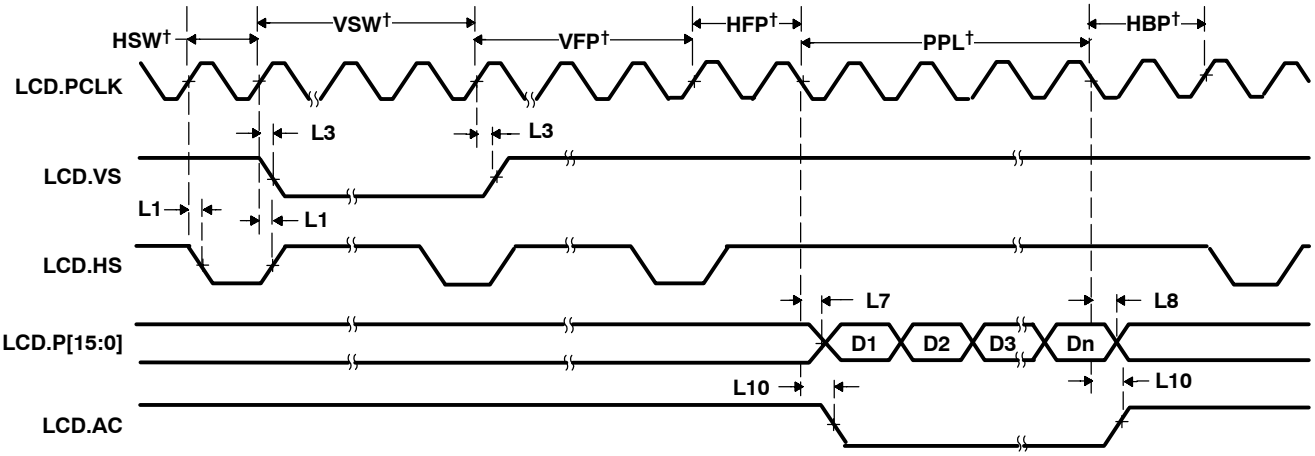

† Delays for HSW (LCD.HS Width), VSW (LCD.VS Width), VFP (Vertical Front Porch), HFP (Horizontal Front Porch), HBP (Horizontal Back Porch) and PPL (Pixels per Line) are programmable in number of LCD.PCLK cycles via the LCD configuration registers.

Figure 5–28. TFT Mode (LCD.HS/LCD.VS on Rising and LCD.Px on Falling LCD.PCLK)

5.13 Multimedia Card/Secure Digital (MMC/SD) Timings

Table 5−28 and Table 5−29 assume testing over recommended operating conditions (see Figure 5−29 through Figure 5−32).

Table 5−28. MMC/SD Timing Requirements

NO.			MIN	MAX	UNIT
M1	$t_{su(CMDV-CLKH)}$	Setup time, MMC.CMD valid before MMC.CLK high	12		ns
M2	$t_{h(CLKH-CMDV)}$	Hold time, MMC.CMD invalid after MMC.CLK high	2		ns
M3	$t_{su(DATV-CLKH)}$	Setup time, MMC.DATx valid before MMC.CLK high	12		ns
M4	$t_{h(CLKH-DATV)}$	Hold time, MMC.DATx invalid after MMC.CLK high	2		ns

Table 5−29. MMC/SD Switching Characteristics

NO.	PARAMETER		MIN	MAX	UNIT
M7	$t_{c(CLK)}$	Cycle time, MMC.CLK	41.7		ns
				5.31	us
M8	$t_{w(CLKH)}$	Pulse Duration, MMC.CLK high	20†		ns
M9	$t_{w(CLKL)}$	Pulse Duration, MMC.CLK low	20†		ns
M10	$t_{d(CLKH-CMD)}$	Delay time, MMC.CLK high to MMC.CMD transition	4	48	ns
M11	$t_{d(CLKH-DAT)}$	Delay time, MMC.CLK high to MMC.DATx transition	4	48	ns

† MMC.CLK period and pulse duration depends upon software configuration.

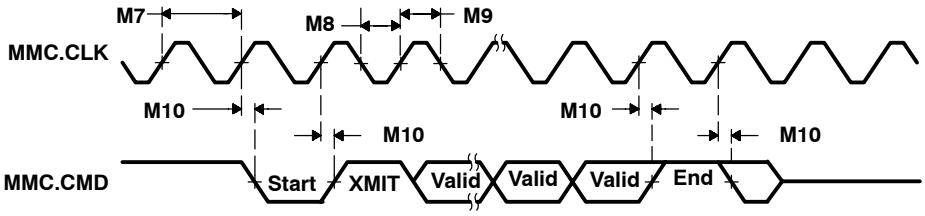

Figure 5−29. MMC/SD Host Command Timings

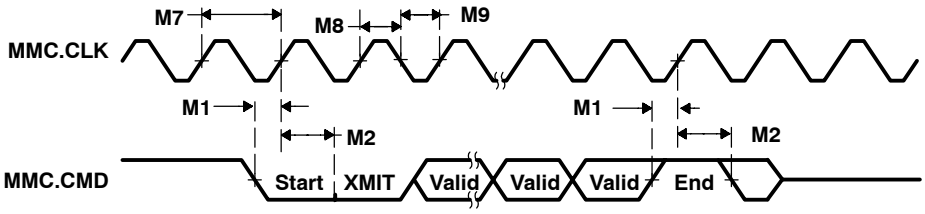

Figure 5−30. MMC/SD Card Response Timings

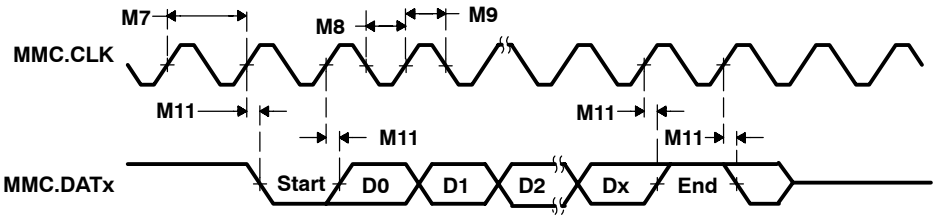

Figure 5–31. MMC/SD Host Write Timings

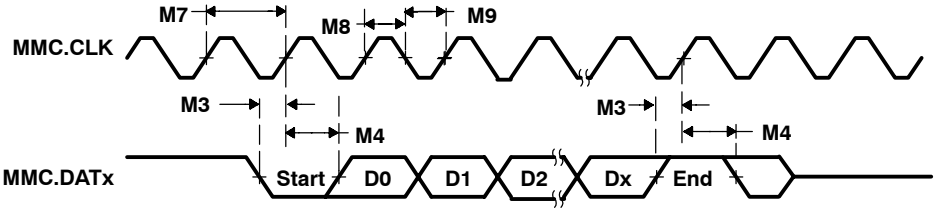

Figure 5–32. MMC/SD Host Read and Card CRC Status Timings

5.14 I²C Timings

Table 5–30 assumes testing over recommended operating conditions (see Figure 5–33).

Table 5–30. I²C Signals (I2C.SDA and I2C.SCL) Switching Characteristics

NO.	PARAMETER		STANDARD MODE		FAST MODE		UNIT
			MIN	MAX	MIN	MAX	
IC1	$t_{c(SCL)}$	Cycle time, I2C.SCL	10†		2.5		µs
IC2	$t_{su(SCLH-SDAL)}$	Setup time, I2C.SCL high before I2C.SDA low (for a repeated START condition)	4.7		0.6		µs
IC3	$t_{h(SCLL-SDAL)}$	Hold time, I2C.SCL low after I2C.SDA low (for a repeated START condition)	4		0.6		µs
IC4	$t_{w(SCLL)}$	Pulse duration, I2C.SCL low	4.7		1.3		µs
IC5	$t_{w(SCLH)}$	Pulse duration, I2C.SCL high	4		0.6		µs
IC6	$t_{su(SDA-SDLH)}$	Setup time, I2C.SDA valid before I2C.SCL high	250	‡	100		ns
IC7	$t_{h(SDA-SDLL)}$	Hold time, I2C.SDA valid after I2C.SCL low (for I²C bus devices)	0		0	0.9	µs
IC8	$t_{w(SDAH)}$	Pulse duration, I2C.SDA high between STOP and START conditions	4.7		1.3		µs
IC9	$t_{r(SDA)}$	Rise time, I2C.SDA		1000		300	ns
IC10	$t_{r(SCL)}$	Rise time, I2C.SCL		1000		300	
IC11	$t_{f(SDA)}$	Fall time, I2C.SDA		300		300	ns
IC12	$t_{f(SCL)}$	Fall time, I2C.SCL		300		300	
IC13	$t_{su(SCLH-SDAH)}$	Setup time, I2C.SCL high before I2C.SDA high (for STOP condition)	4.0		0.6		µs
IC14	$t_{w(SP)}$	Pulse duration, spike (must be suppressed)			0	50	ns
IC15	C_b§	Capacitive load for each bus line		400		400	pF

† In the master-only I²C operating mode of OMAP5910, minimum cycle time for I2C.SCL is 12 µs.
‡ The maximum $t_{h(SCLL-SDAL)}$ has only to be met if the device does not stretch the low period ($t_{w(SCLL)}$) of the I2C.SCL signal.
§ C_b = The total capacitance of one bus line in pF.

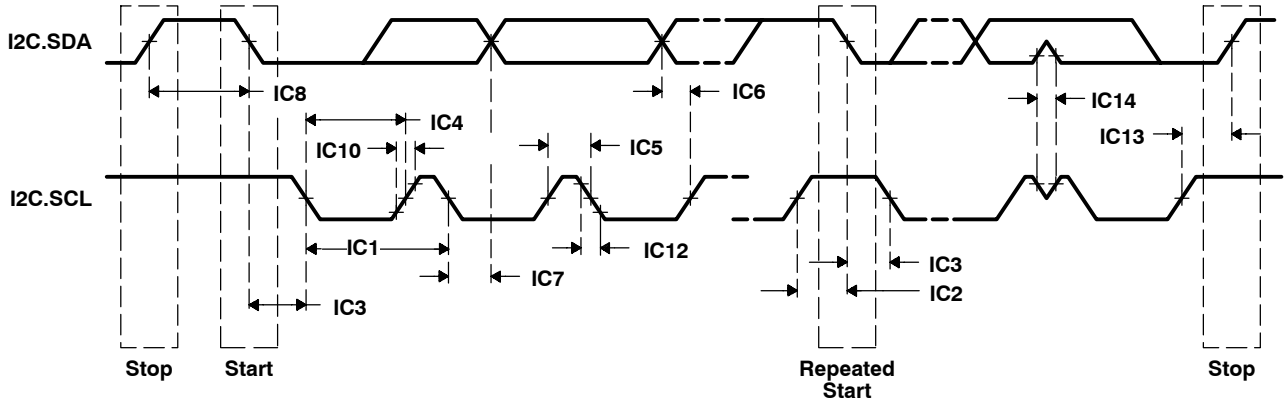

NOTES: A. A device must internally provide a hold time of at least 300 ns for the I2C.SDA signal (referred to the V_{IHmin} of the I2C.SCL signal) to bridge the undefined region of the falling edge of I2C.SCL.
B. The maximum $t_{h(SCLL-SDAL)}$ has only to be met if the device does not stretch the LOW period ($t_{w(SCLL)}$) of the I2C.SCL signal.
C. A Fast-mode I²C-bus device can be used in a standard-mode I²C-bus system, but the requirement $t_{su(SDA-SDLH)}$ • 250 ns must then be met. This is automatically the case if the device does not stretch the LOW period of the I2C.SCL signal. If such a device does stretch the LOW period of the I2C.SCL signal, it must output the next data bit to the I2C.SDA line t_r max + $t_{su(SDA-SDLH)}$ = 1000 + 250 = 1250 ns (according to the standard-mode I²C-bus specification) before the I2C.SCL line is released.
D. C_b = total capacitance of one bus line in pF. If mixed with fast-mode devices, faster fall times are allowed.

Figure 5–33. I²C Timings

5.15 Universal Serial Bus (USB) Timings

All OMAP5910 USB interfaces are compliant with the *Universal Serial Bus Specification, Revision 2.0*. Table 5–31 assumes testing over recommended operating conditions (see Figure 5–34).

Table 5–31. USB Integrated Transceiver Interface Switching Characteristics

NO.	PARAMETER		LOW SPEED 1.5 Mbps		FULL SPEED 12 Mbps		UNIT
			MIN	MAX	MIN	MAX	
U1	t_r	Rise time, USB.DP and USB.DM signals†	75†	300†	4†	20†	ns
U2	t_f	Fall time, USB.DP and USB.DM signals†	75†	300†	4†	20†	ns
U3	t_{RFM}	Rise/Fall time matching‡	80‡	125‡	90‡	111.11‡	%
U4	V_{CRS}	Output signal cross-over voltage†	1.3†	2.0†	1.3†	2.0†	V
U5	t_{jr}	Differential propagation jitter§	−25§	25§	−2§	2§	ns
U6	f_{op}	Operating frequency¶		1.5		12	MHz

† Low Speed: C_L = 200 pF, Full Speed: C_L = 50 pF
‡ $t_{RFM} = (t_r/t_f) \times 100$
§ $t_{jr} = t_{px(1)} - t_{px(0)}$
¶ $f_{op} = 1/t_{per}$

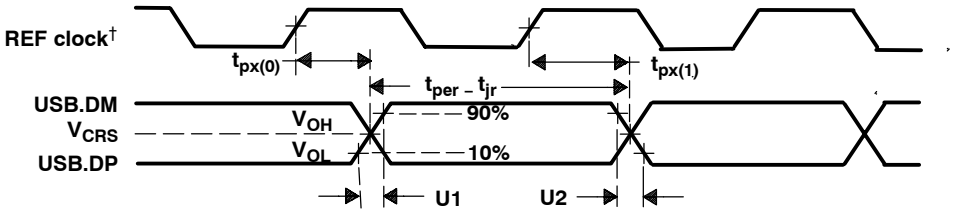

† "REF clock" is not an actual device signal, but an ideal reference clock against which relative timings are specified. REF clock is assumed to be 12 MHz for full-speed mode or 1.5 MHz for low-speed mode).

Figure 5–34. USB Integrated Transceiver Interface Timings

5.16 MICROWIRE Interface Timings

Table 5−32 and Table 5−33 assume testing over recommended operating conditions (see Figure 5−35).

Table 5−32. MICROWIRE Timing Requirements

NO.			MIN	MAX	UNIT
W5	$t_{su(SDI-SCLK)}$	Setup time, UWIRE.SDI valid before UWIRE.SCLK active edge†	21		ns
W6	$t_{h(SCLK-SDI)}$	Hold time, UWIRE.SDI invalid after UWIRE.SCLK active edge†	6		ns

† Polarity of UWIRE.SCLK and the active clock edge (rising or falling) on which SDO data is driven and SDI data is latched is all software configurable. These timings apply to all configurations regardless of UWIRE.SCLK polarity and which clock edges are used to drive output data and capture input data.

Table 5−33. MICROWIRE Switching Characteristics

NO.	PARAMETER		MIN	MAX	UNIT
W1	$f_{op(SCLK)}$	Operating Frequency, UWIRE.SCLK		3	MHz
W2	$t_{w(SCLK)}$	Pulse Duration, UWIRE.SCLK high/low	0.45P‡	0.55P‡	ns
W3	$t_{d(SCLK-SDO)}$	Delay time, UWIRE.SCLK active edge to UWIRE.SDO transition†	−3	6	ns
W4	$t_{d(CS-SCLK)}$	Delay time, UWIRE.CSx active to UWIRE.SCLK active†	1.5P‡		ns

† Polarity of UWIRE.SCLK and the active clock edge (rising or falling) on which SDO data is driven and SDI data is latched is all software configurable. These timings apply to all configurations regardless of UWIRE.SCLK polarity and which clock edges are used to drive output data and capture input data.
‡ P = UWIRE.SCLK cycle time in ns.

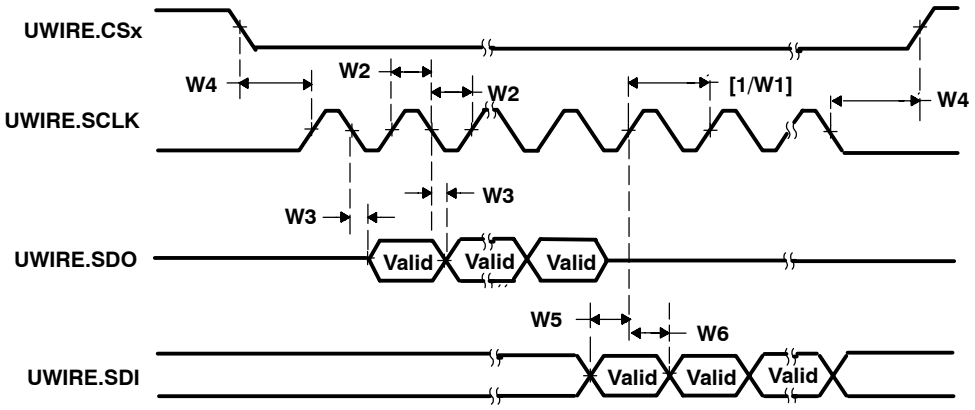

NOTE: The polarities of UWIRE.CSx and UWIRE.SCLK and the active UWIRE.SCLK edges on which SDO is driven and SDI is sampled are all software configurable.

Figure 5−35. MICROWIRE Timings

5.17 HDQ/1-Wire Interface Timings

Table 5−34 and Table 5−35 assume testing over recommended operating conditions (see Figure 5−36 through Figure 5−39).

Table 5−34. HDQ/1-Wire Timing Requirements†

				MIN	MAX	UNIT
H1	t_c	Cycle time, master read		190	250	µs
H2	t_v	Read one data valid after HDQ low		32	50	µs
H3	t_v	Read zero data hold after HDQ low		80	145	µs
H4	t_v	Response time from HDQ slave device	OMAP5910 base frequency = 12 MHz	190	320	µs
			OMAP5910 base frequency = 13 MHz	190	303	µs
W1	t_c	Cycle time, master read		190		µs
W2	t_v	Read data valid after HDQ low (master sample window)		12	13.6	µs
W3	t_{dis}	Recovery time after slave device inactive		1		µs

† HDQ timing is OMAP5910 default. 1-Wire timing is selectable through software.

Table 5−35. HDQ/1-Wire Switching Characteristics

	PARAMETER			MIN	MAX	UNIT
H5	t_c	Cycle time, master write		190		µs
H6	t_d	Write one data valid after HDQ low		32	50	µs
H7	t_d	Write zero data hold after HDQ low	OMAP5910 base frequency = 12 MHz	100	145	µs
			OMAP5910 base frequency = 13 MHz	92	145	µs
H8	t_w	Pulse width, HDQ low for break pulse (reset)		190		µs
H9	t_w	Pulse width, HDQ high for break pulse recovery		40		µs
W4	t_c	Cycle time, master write		190		µs
W5	t_d	Write zero master inactive after HDQ low		15	90	µs
W6	t_d	Write one master inactive after HDQ low		1.1	1.4	µs
W7	t_{dis}	Recovery time after master inactive		1		µs

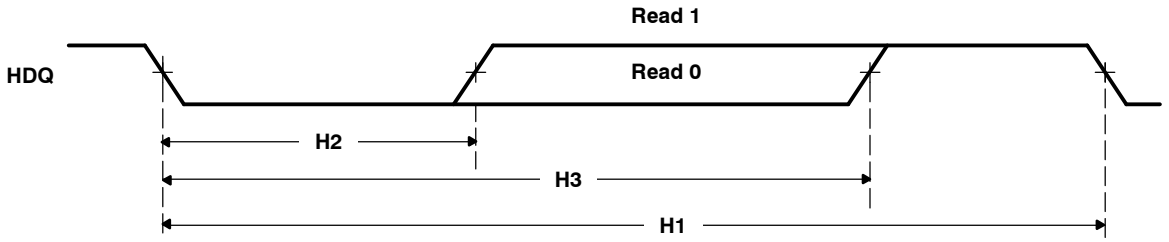

Figure 5–36. OMAP5910 HDQ Interface Reading From HDQ Slave Device

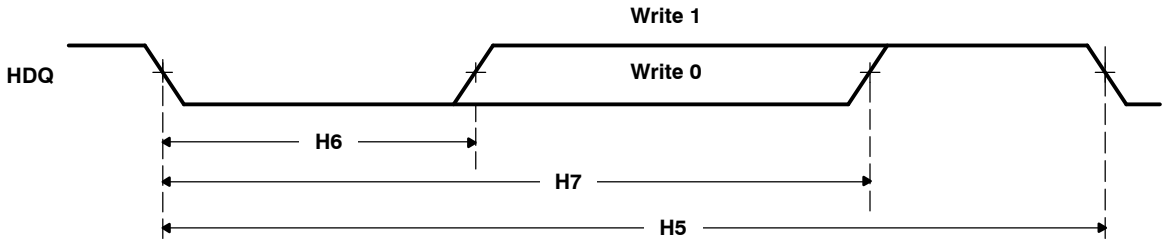

Figure 5–37. OMAP5910 HDQ Interface Writing to HDQ Slave Device

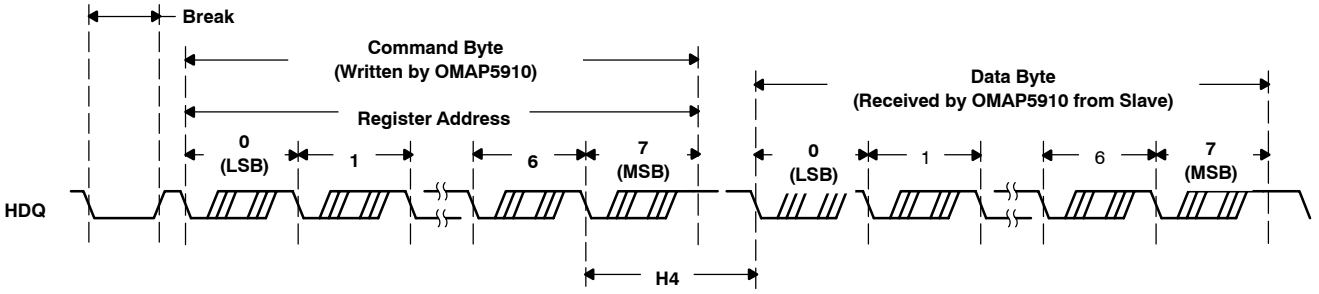

Figure 5–38. Typical Communication Between OMAP5910 HDQ and HDQ Slave

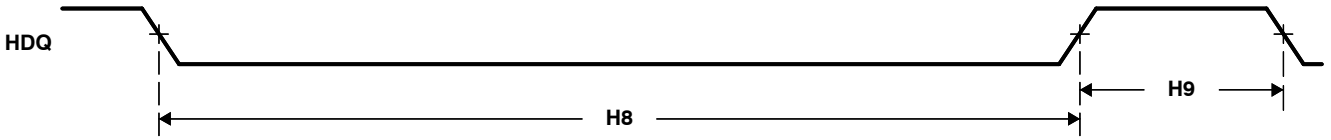

Figure 5–39. HDQ/1-Wire Break (Reset) Timing

6 Glossary

ACRONYM	DEFINITION
1-wire	a serial protocol defined by Dallas Semiconductor Corporation
AAC	Advanced Audio Coding (standard) (ISO/IEC 13818-7)
AC97	Interface Standard for Codecs
ALU	arithmetic/logic unit
AMR	Adaptive Multi-Rate
ASRAM	asynchronous static RAM
AU	address unit
BCD	binary coded decimal
BGA	ball grid array
CMOS	complementary metal oxide semiconductor
CP15	coprocessor 15
CRC	cyclic redundancy check
CSL	Chip Support Library
CTS	clear-to-send
DARAM	dual-access RAM
DCT	discrete cosine transform
DMA	direct memory access
DPLL	digital phase-locked loop
DSP	digital signal processor
DSPLIB	DSP Library
DSR	data-set-ready
DTR	data-terminal-ready
DU	data unit
EMIFF	external memory interface fast
EMIFS	external memory interface slow
EP	endpoint
ESD	electrostatic discharge
ETM	
FAC	frame adjustment counter
FFT	Fast Fourier Transform
FIFO	first-in first out
FIQ	fast interrupt request
GPRS	General Packet Radio Service
GSM	Global System for Mobile Communications
H.26x	an ITU-TSS standard
HBM	Human Body Model
HBP	Horizontal Back Porch

ACRONYM	DEFINITION
HDQ	a single-wire serial interface protocol defined by Benchmarq™ Controls Inc.
HFP	Horizontal Front Porch
HOM	host-only mode
HS	high-speed
I-cache	instruction cache
I^2C	Inter-integrated circuit
I^2S	Inter-IC Sound (specification)
iDCT	Inverse Discrete Cosine Transform
I/F	interface
IFR	Interrupt Flag Register
IMGLIB	Image/Video Processing Library
IMIF	internal memory interface
IMR	Interrupt Mask Register
IOM-2	ISDN Oriented Modular Interface Revision 2
IrDA	infrared data adapter
IRQ	low-priority interrupt request
IU	instruction unit
JPEG	Joint Photographic Experts Group – standard for compressed still-picture data
LB	local bus
LCD	liquid crystal display
LPG	LED pulse generator
LSB	least significant bit
LVCMOS	low-voltage CMOS
MAC	multiply-accumulate
MCSI	multichannel serial interface
McBSP	multichannel buffered serial port
MMC	multimedia card
MMC/SD	multimedia card/secure digital
MMU	memory management unit
MPEG	Moving Picture Experts Group – proposed standard for compressed video data
MPU	microprocessor unit
MPUI	microprocessor unit interface
MPUIO	microprocessor unit I/O
MSB	most significant bit
MVIP	multi-vendor integration protocol
ODM	original design manufacturer
OEM	original equipment manufacturer
OHCI	Open Host Controller Interface
OS	operating system

Benchmarq is a trademark of Texas Instruments.

ACRONYM	DEFINITION
PPL	pixels per line
PU	program unit
PWL	pulse-width light
PWT	pulse-width tone
RISC	reduced instruction set computer
RTC	real-time clock
RTS	request-to-send
SAM	shared-access mode
SARAM	single-access RAM
SD	secure digital
SDRAM	synchronous dynamic RAM
SDW	short distance wireless
SIR	slow infrared
SPI	serial peripheral interface
SRAM	static RAM
SRG	Sample Rate Generator
STN	super twisted nematic
T1/E1	T1 is a digital transmission link with a capacity of 1.544 Mbps. It uses two pairs of normal twisted-wires and can handle 24-voice conversations, each digitized using mu-law coding at 64 kbps. T1 is used in USA, Canada, Hong Kong, and Japan. E1 is a digital transmission link with a capacity of 2.048 Mbps. It is the European equivalent of T1. It can handle 30-voice conversations, each digitized using A-law coding at 64 kbps.
TAP	test access port
TC	traffic controller
TFT	thin-film transistor
TI	Texas Instruments
TIPB	TI peripheral bus
TLB	Translation Look-Aside Buffer
TTB	Translation Table Base
UART	universal asynchronous receiver/transmitter
ULPD	ultra low-power device
URL	uniform resource locator
USB	universal serial bus
USB2.0	Universal Serial Bus Specification Revision 2.0
VFP	Vertical Front Porch
VIVT	virtual index virtual tag
WB	write buffer
WDT	watchdog timer
WMA	Windows Media Audio
WMV	Windows Media Video

7 Mechanical Data

The following mechanical package diagram(s) reflect the most current released mechanical data available for the designated device(s).

GZG (S-PBGA-N289) **PLASTIC BALL GRID ARRAY**

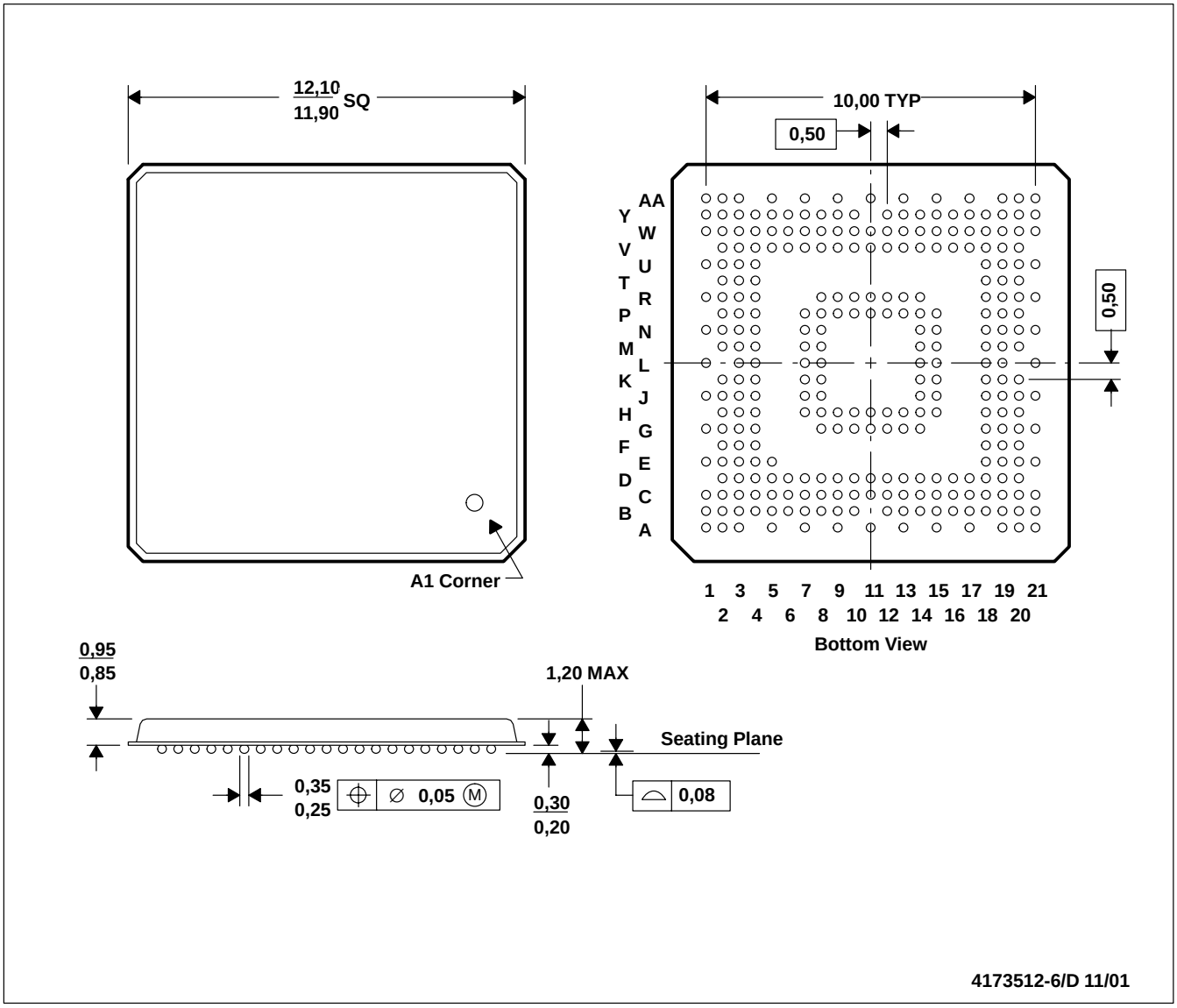

NOTES: A. All linear dimensions are in millimeters.
B. This drawing is subject to change without notice.
C. MicroStar BGA™ configuration

MicroStar BGA is a trademark of Texas Instruments.

GDY (S–PBGA–N289) PLASTIC BALL GRID ARRAY

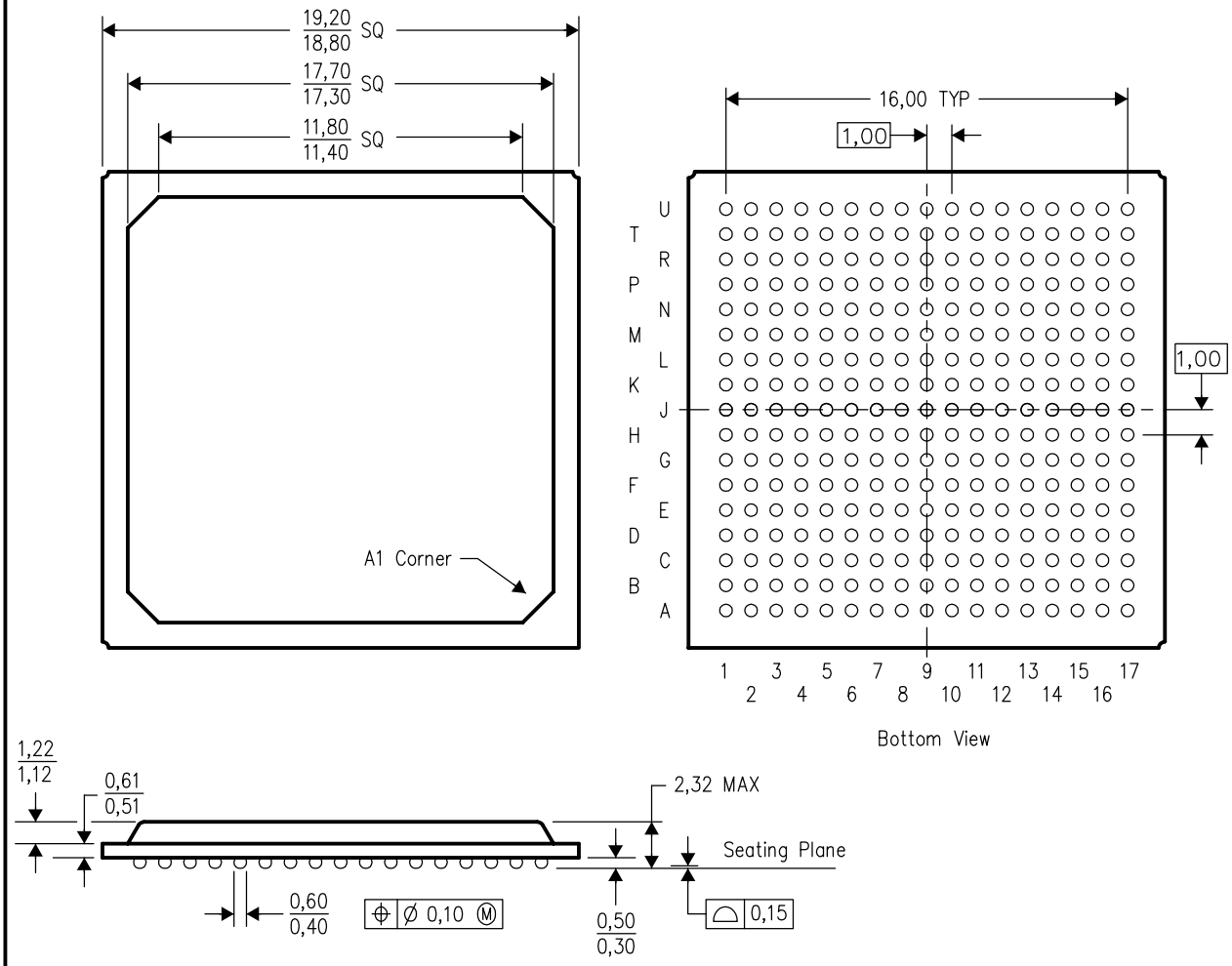

NOTES: A. All linear dimensions are in millimeters.
B. This drawing is subject to change without notice.