

Datasheet

Barracuda

Part No:
OMB.433.B03F21

Description

Barracuda - 433MHz 3dBi Omni Directional Outdoor Antenna with N Type Female Connector, U-Bolt, 523mm Length

Features:

- Omni-Directional Radiation Pattern
- Collinear
- 2dBi Peak gain, 433 MHz
- Fiberglass Housing
- Robust design for all weather operation
- IP65 Waterproof
- Length: 553mm, Weight: 350g
- N type Female connector
- Wall/Pole Mount bracket included
- RoHS & Reach Compliant

1.	Introduction	3
2.	Specification	4
3.	Antenna Characteristics	5
4.	Radiation Patterns	8
5.	Mechanical Drawing	10
6.	Packaging	11
7.	Antenna Installation Guide	12
	Changelog	13

Taoglas makes no warranties based on the accuracy or completeness of the contents of this document and reserves the right to make changes to specifications and product descriptions at any time without notice. Taoglas reserves all rights to this document and the information contained herein. Reproduction, use or disclosure to third parties without express permission is strictly prohibited.

1. Introduction



The OMB.433.B03F21 is a fiberglass Omni-directional outdoor antenna, operating in the 433 MHz ISM band. The antenna is designed for applications such as metering, industrial / environmental monitoring, remote asset monitoring, and mesh network applications.

The OMB.433 operates at 433MHz, one of the most widely used license free ISM bands, with a 3dBi peak gain. The omni-directional antenna radiates uniformly in the azimuth. This collinear design characteristic provides the best performance, giving optimized coverage and therefore longer range in the horizontal plane over 360 degrees, thus minimizing the amount of nodes needed for a mesh network.

The UV resistant fiberglass housing enables the OMB antenna to be utilized in all kinds of harsh environments, making it more robust and safer than traditional whip antennas. It can be connected directly to the access point or telemetry unit, or can be mounted on wall or device surface via the N-type connector.

Another larger model, the OMB.433.B06F21 with 6dBi peak gain, also working in the 433MHz ISM band, is also available. Gain and connector customizable, subject to MOQ.

2. Specification

LTE Electrical								
Band	Frequency (MHz)	Efficiency (%)	Average Gain (dB)	Peak Gain (dBi)	Impedance	VSWR	Radiation Pattern	Max. input power
433MHz	430-436	89.6	-0.48	2.00	50 Ω	1.5:1	Omni	100W

Mechanical	
Length	553 mm (Max)
Radome Diameter	24mm
Bracket Dimension	70 x 53mm (Max)
Antenna Weight	350g
Mounting Accessories Weight	70g
Application	Indoor/Outdoor
Radome Material	White Fiberglass
Mount Style	Pole Mount/Wall Mount
U Bolt	Stainless Steel

Environmental	
Storage Temperature	-40°C to +85°C
Operating Temperature	-40°C to +85°C
Operating Humidity	10%~90% non-condensing
Storage Humidity	5%~90% non-condensing
Wind Resistance	>150mph (>241km/h)
Waterproof	IP65

3. Antenna Characteristics

3.1 Test Setup



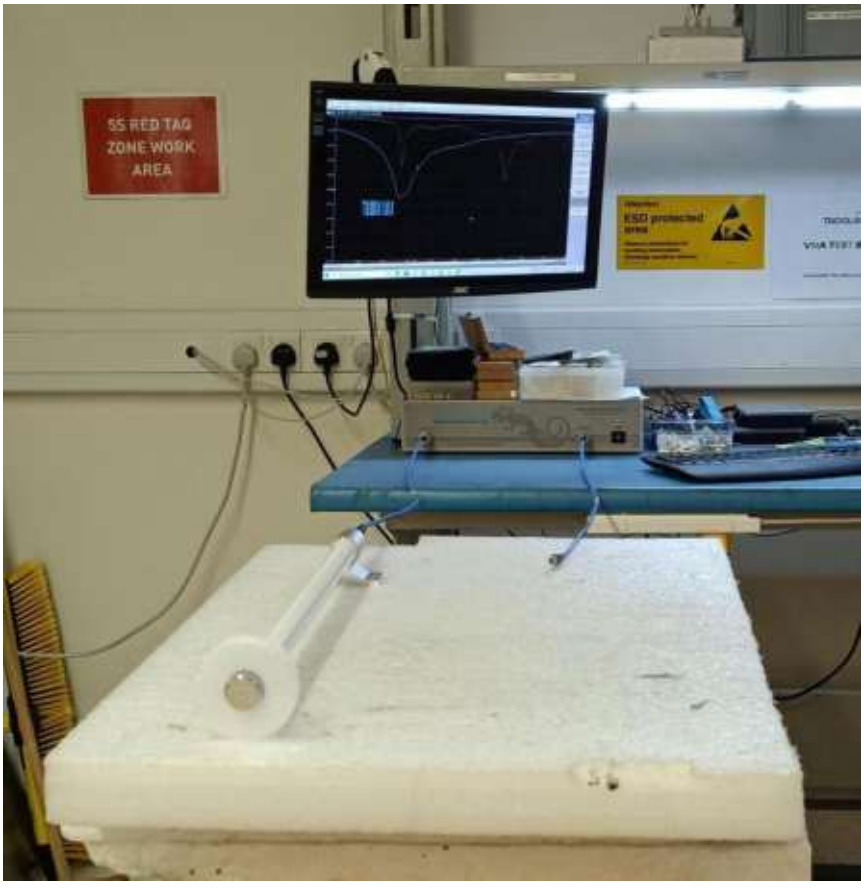

3.2 Return Loss

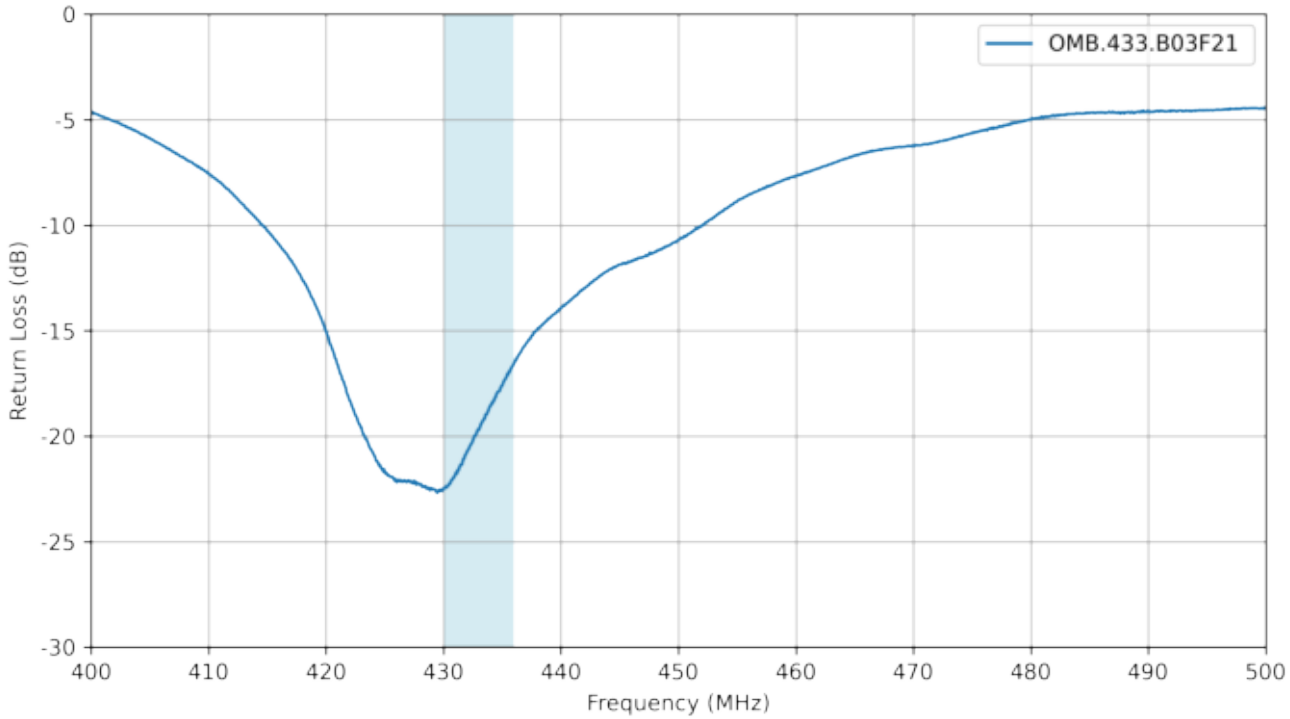

3.3 Efficiency

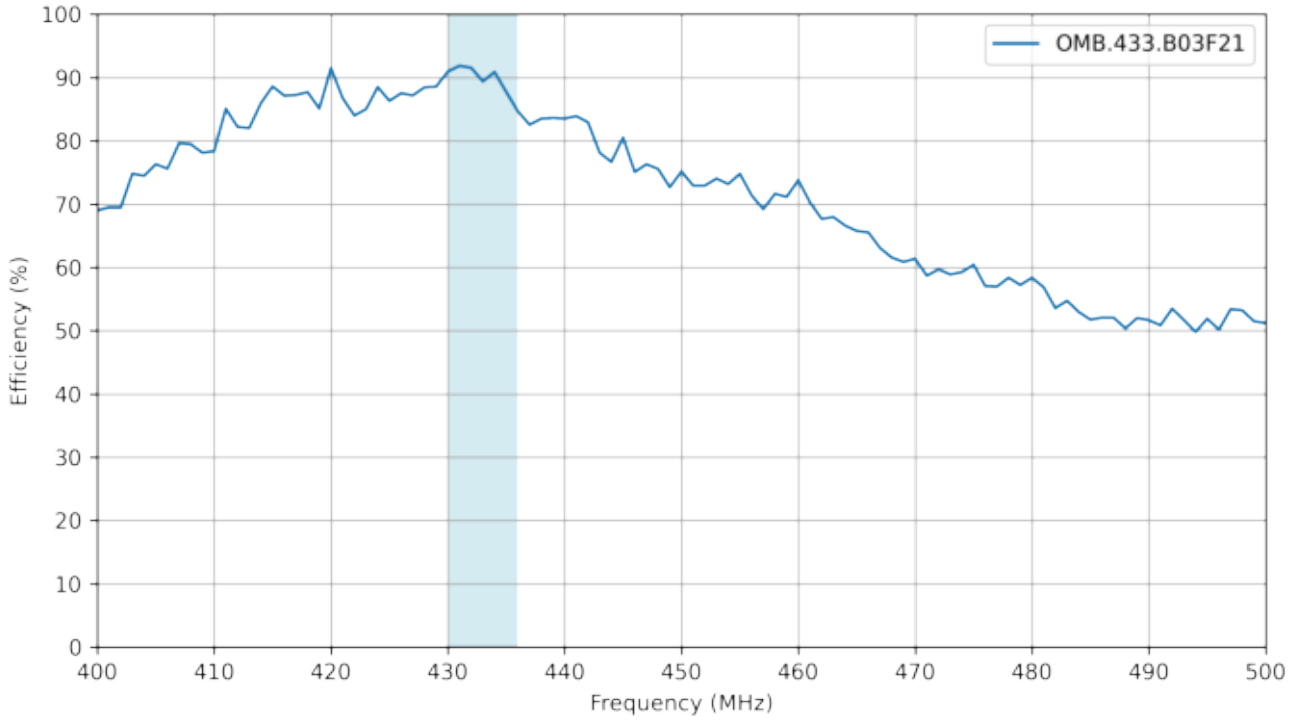

3.4 Average Gain

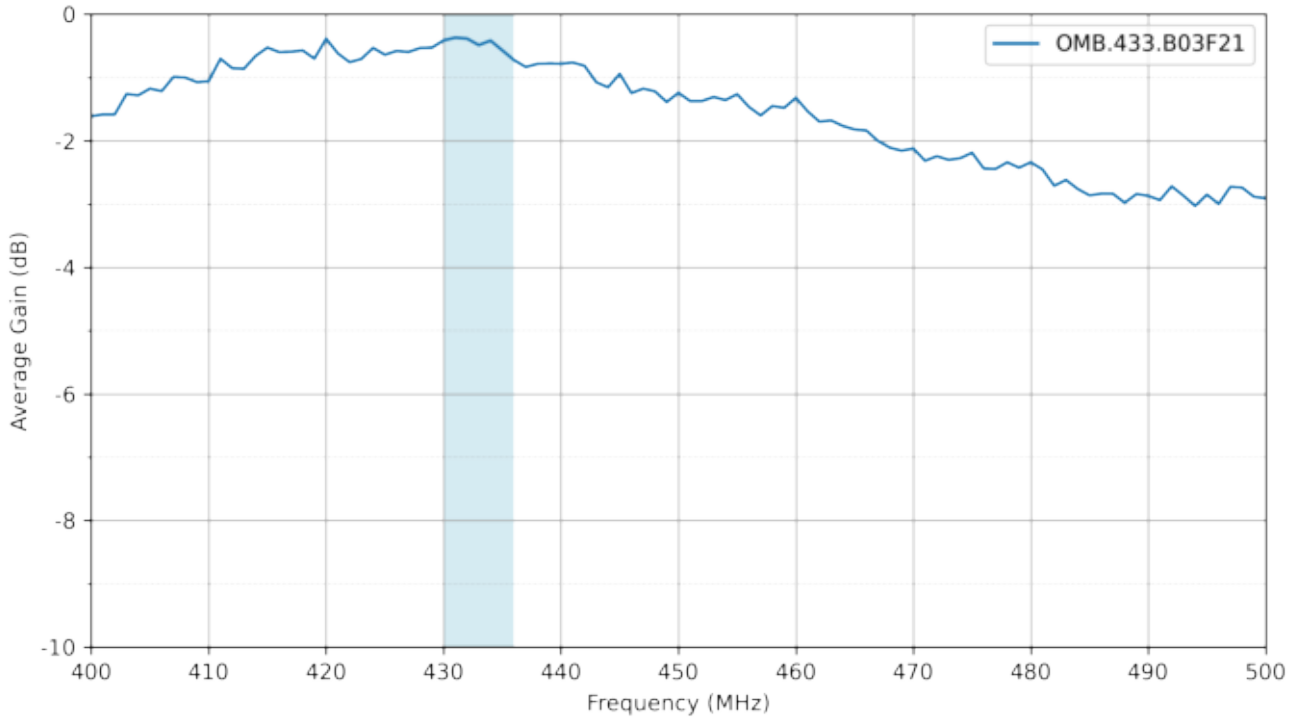

3.5 Peak Gain

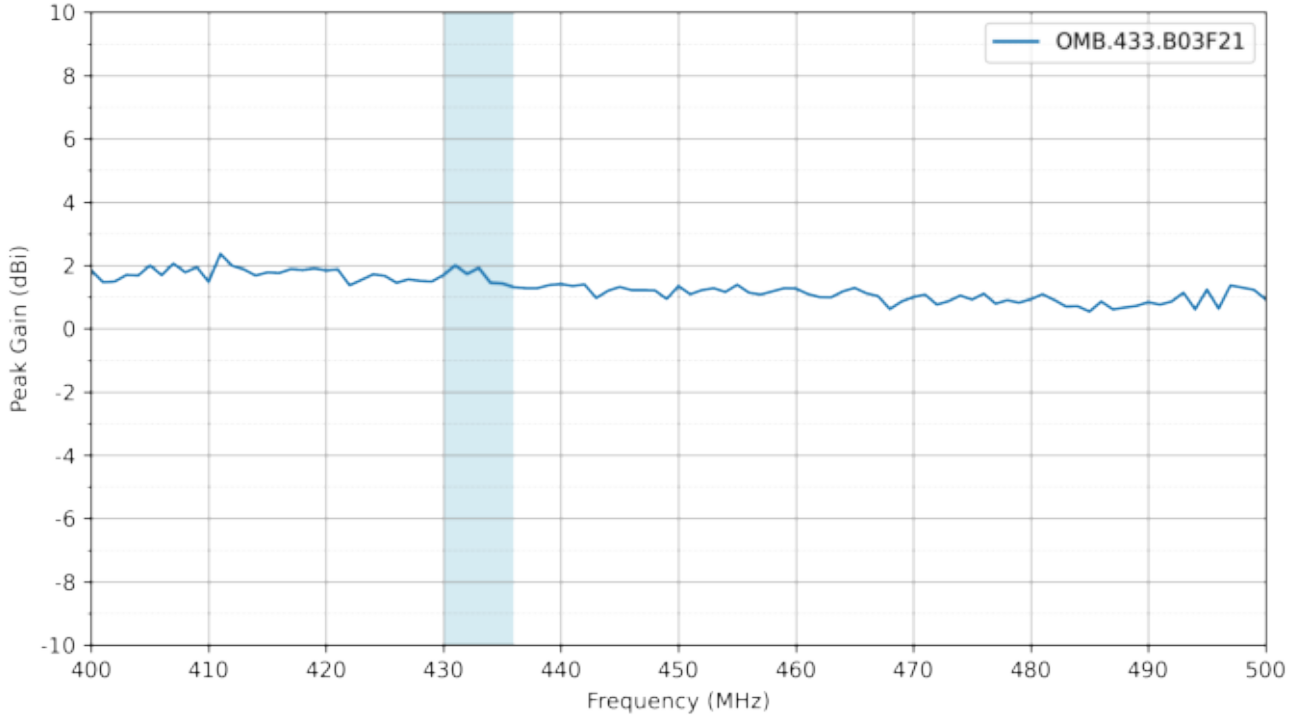

4. Radiation Patterns

4.1 Test Setup

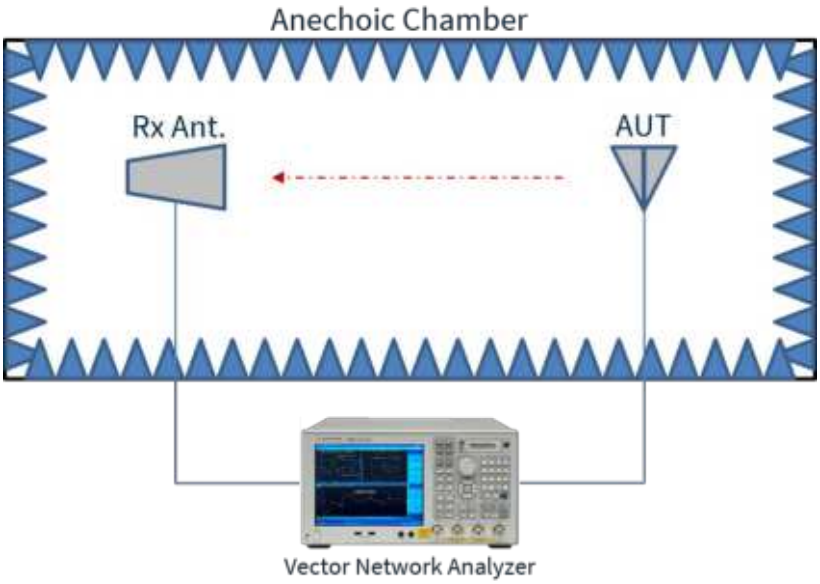

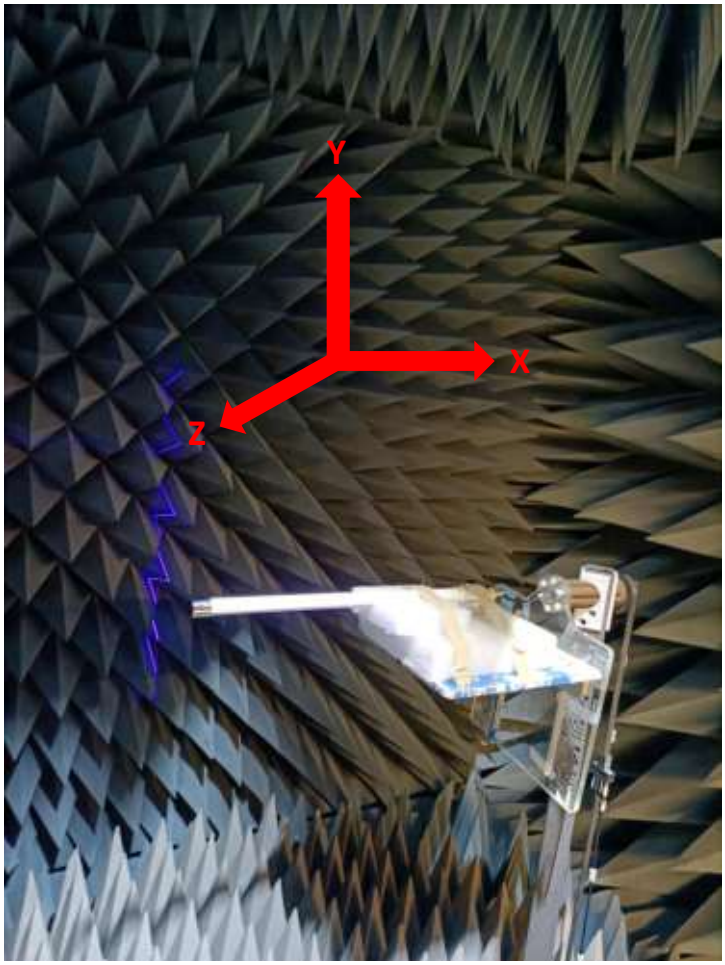

4.2 Patterns at 433 MHz

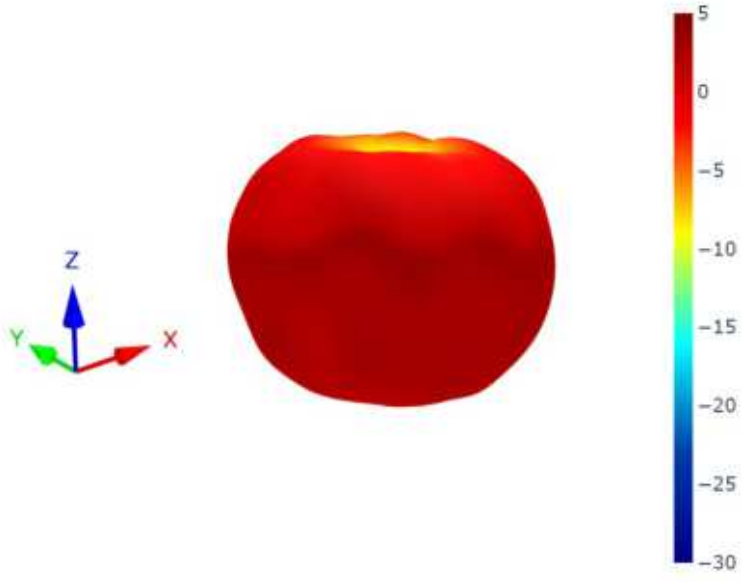

XZ Plane	YZ Plane	XY Plane
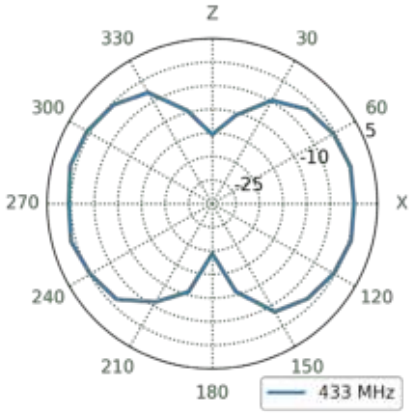	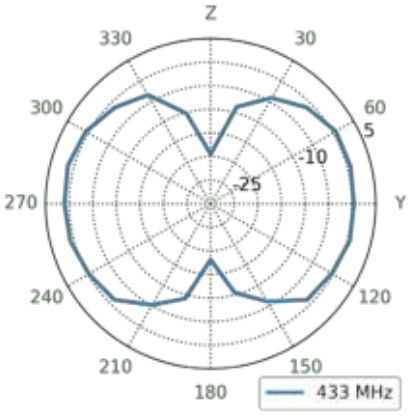	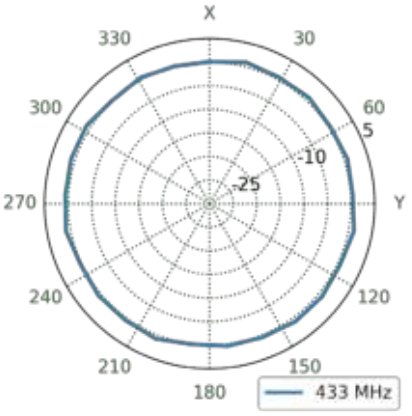

5. Mechanical Drawing

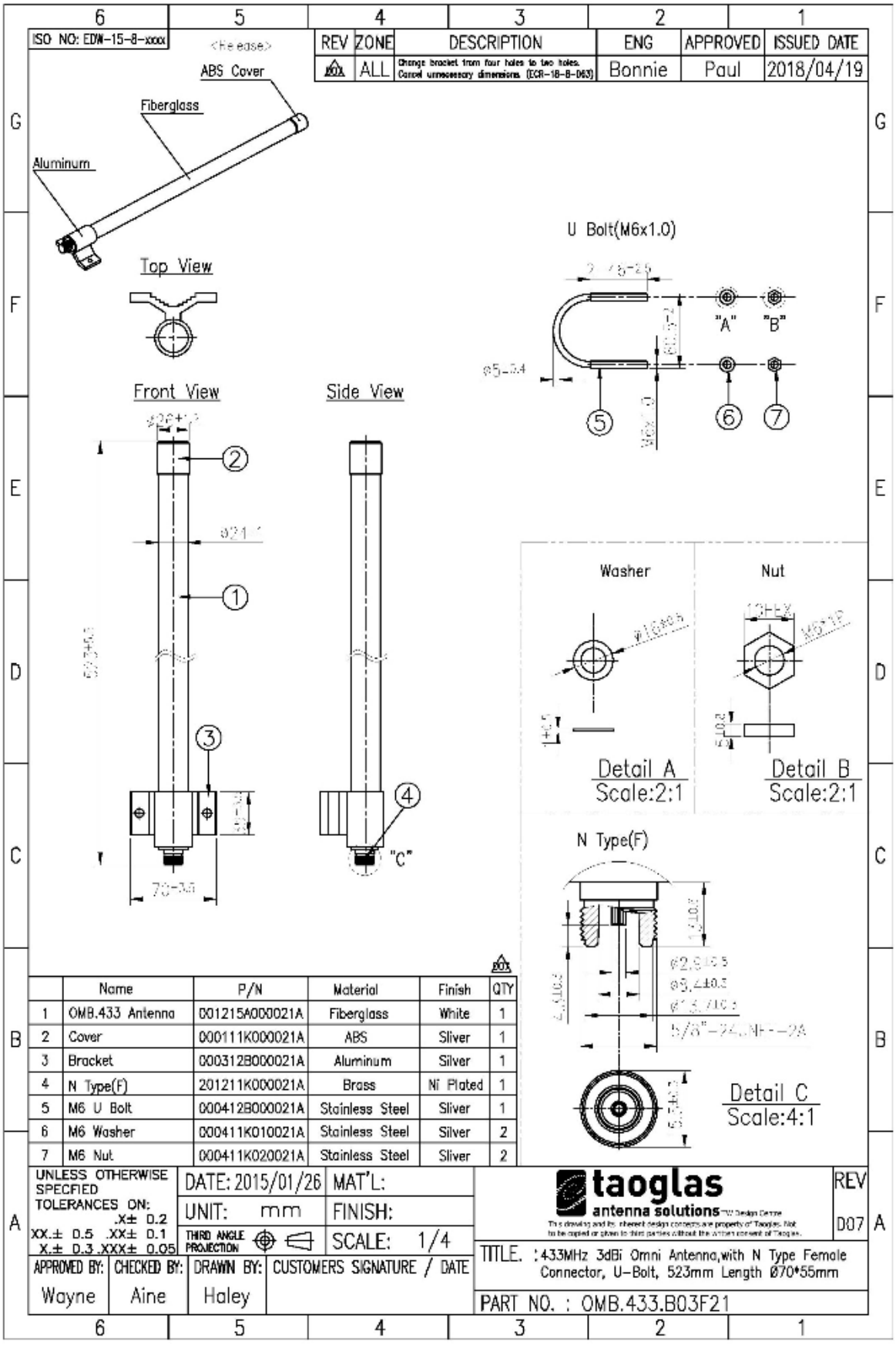

Text ...

6. Packaging

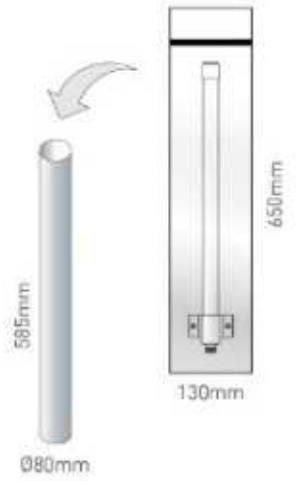

1 OMB.433.B03F21 per PE Bag
Bag Dimensions 130mm*650mm
1 PE Bag per Tube
Tube Dimensions - Ø80mm*Height 585mm
Total Weight - 620g

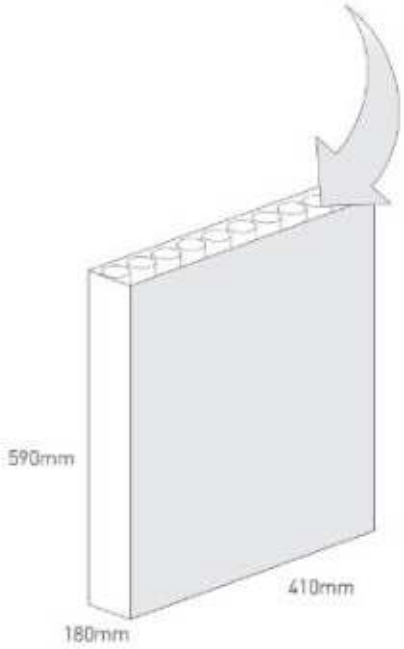

10 tubes per carton
Carton Dimensions - 590*410*180mm
Weight - 7.26Kg

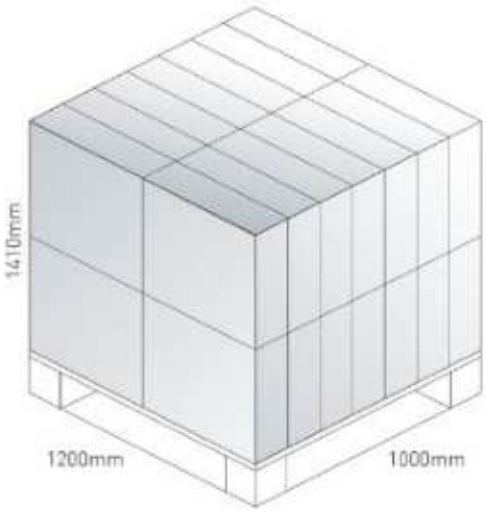

Pallet dimensions 1200*1000*1410mm
28 Cartons per pallet

7. Antenna Installation Guide

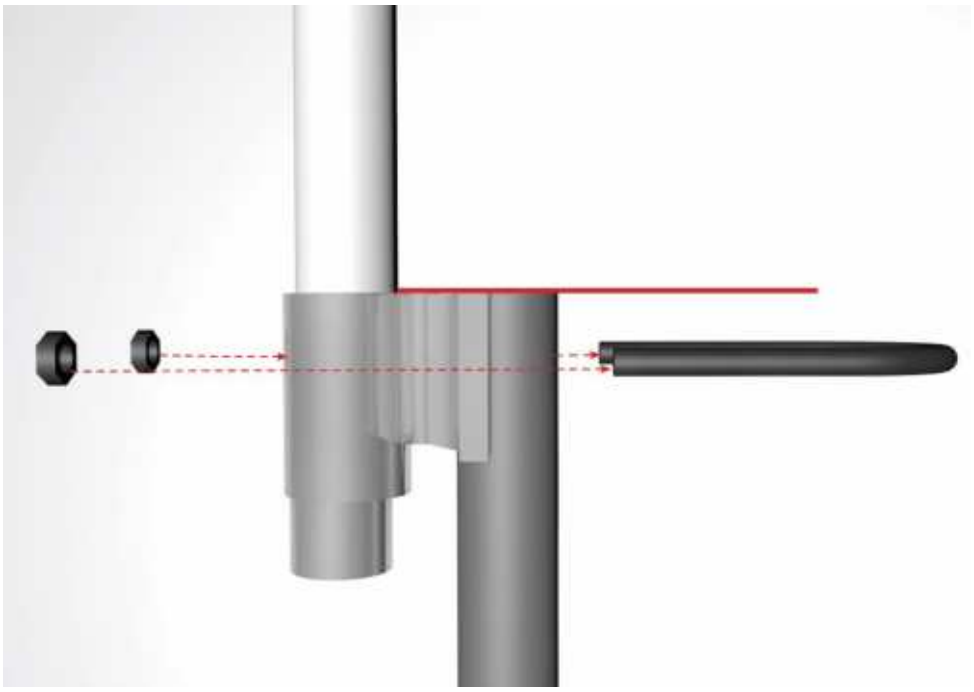

Changelog for the datasheet

SPE-16-8-019 – OMB.433.B03F21

Revision: G (Current Version)	
Date:	2023-11-09
Changes:	Full datasheet update
Changes Made by:	Gary West

Previous Revisions

Revision: F	
Date:	2019-09-02
Changes:	Updated template, added Return Loss, Efficiency, Average Gain
Changes Made by:	Yu Kai Yeung

Revision: A (Original First Release)	
Date:	2016-03-18
Notes:	
Author:	Unknown Author

Revision: E	
Date:	2018-05-23
Changes:	
Changes Made by:	Yu Kai Yeung

Revision: D	
Date:	2018-03-27
Changes:	Amended Installation
Changes Made by:	Jack Conroy

Revision: C	
Date:	2018-03-08
Changes:	Added Installation Guide
Changes Made by:	Jack Conroy

Revision: B	
Date:	2016-08-17
Changes:	Updated drawings as per PCN
Changes Made by:	Andy Mahoney

TAOGLAS®

www.taoglas.com

