MC74VHCT08A

Quad 2-Input AND Gate

The MC74VHCT08A is an advanced high speed CMOS 2−input AND gate fabricated with silicon gate CMOS technology. It achieves high speed operation similar to equivalent Bipolar Schottky TTL while maintaining CMOS low power dissipation.

The VHCT inputs are compatible with TTL levels. This device can be used as a level converter for interfacing 3.3 V to 5.0 V, because it has full 5.0 V CMOS level output swings.

The VHCT08A input structures provide protection when voltages between 0 V and 5.5 V are applied, regardless of the supply voltage. The output structures also provide protection when V_{CC} = 0 V. These input and output structures help prevent device destruction caused by supply voltage − input/output voltage mismatch, battery backup, hot insertion, etc.

The internal circuit is composed of three stages, including a buffer output which provides high noise immunity and stable output. The inputs tolerate voltages up to 7.0 V, allowing the interface of 5.0 V systems to 3.0 V systems.

Features

- High Speed: t_{PD} = 4.3 ns (Typ) at V_{CC} = 5 V
- Low Power Dissipation: I_{CC} = 2 μA (Max) at T_A = 25°C
- TTL−Compatible Inputs: V_{IL} = 0.8 V; V_{IH} = 2.0 V
- Power Down Protection Provided on Inputs
- Balanced Propagation Delays
- Designed for 2 V to 5.5 V Operating Range
- Low Noise: V_{OLP} = 0.8 V (Max)
- Pin and Function Compatible with Other Standard Logic Families
- Latchup Performance Exceeds 300 mA
- ESD Performance: Human Body Model; > 2000 V, Machine Model; > 200 V
- Chip Complexity: 24 FETs or 6 Equivalent Gates
- Pb−Free Packages are Available*

*For additional information on our Pb−Free strategy and soldering details, please download the ON Semiconductor Soldering and Mounting Techniques Reference Manual, SOLDERRM/D.

ON Semiconductor®

http://onsemi.com

MARKING DIAGRAMS

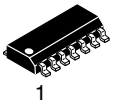

SOIC−14
D SUFFIX
CASE 751A

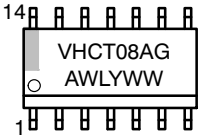



TSSOP−14
DT SUFFIX
CASE 948G

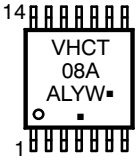

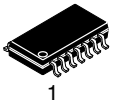

SOEIAJ−14
M SUFFIX
CASE 965

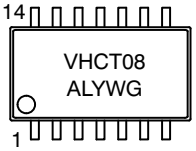

A	= Assembly Location
WL, L	= Wafer Lot
Y, YY	= Year
WW, W	= Work Week
G or ▪	= Pb−Free Package

(Note: Microdot may be in either location)

ORDERING INFORMATION

See detailed ordering and shipping information in the package dimensions section on page 4 of this data sheet.

© Semiconductor Components Industries, LLC, 2008

Downloaded from Arrow.com.

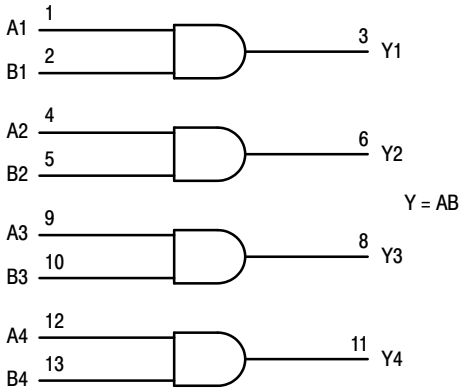

Figure 1. Logic Diagram

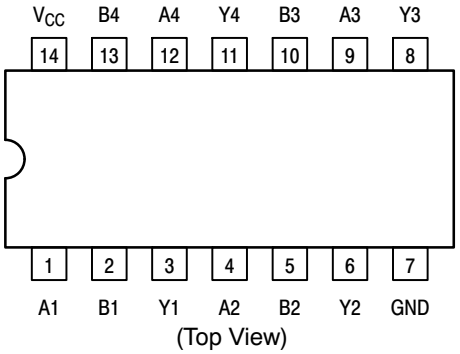

Figure 2. Pinout: 14–Lead Packages

FUNCTION TABLE

Inputs		Output
A	**B**	**Y**
L	L	L
L	H	L
H	L	L
H	H	H

MAXIMUM RATINGS*

Rating	Symbol	Value	Unit
DC Supply Voltage	V_{CC}	–0.5 to +7.0	V
DC Input Voltage	V_{in}	–0.5 to +7.0	V
DC Output Voltage	V_{out}	–0.5 to V_{CC} +0.5	V
Input Diode Current	I_{IK}	–20	mA
Output Diode Current	I_{OK}	±20	mA
DC Output Current, per Pin	I_{out}	±25	mA
DC Supply Current, V_{CC} and GND Pins	I_{CC}	±50	mA
Power Dissipation in Still Air, SOIC Packages† TSSOP Package†	P_D	500 450	mW
Storage Temperature	T_{stg}	–65 to +150	°C

This device contains protection circuitry to guard against damage due to high static voltages or electric fields. However, precautions must be taken to avoid applications of any voltage higher than maximum rated voltages to this high–impedance circuit. For proper operation, V_{in} and V_{out} should be constrained to the range GND ≤ (V_{in} or V_{out}) ≤ V_{CC}.

Unused inputs must always be tied to an appropriate logic voltage level (e.g., either GND or V_{CC}). Unused outputs must be left open.

Stresses exceeding Maximum Ratings may damage the device. Maximum Ratings are stress ratings only. Functional operation above the Recommended Operating Conditions is not implied. Extended exposure to stresses above the Recommended Operating Conditions may affect device reliability.

* Absolute maximum continuous ratings are those values beyond which damage to the device may occur. Exposure to these conditions or conditions beyond those indicated may adversely affect device reliability. Functional operation under absolute–maximum–rated conditions is not implied.

†Derating – SOIC Packages: – 7 mW/°C from 65° to 125°C
TSSOP Package: – 6.1 mW/°C from 65° to 125°C

RECOMMENDED OPERATING CONDITIONS

Parameter	Symbol	Min	Max	Unit
DC Supply Voltage	V_{CC}	4.5	5.5	V
DC Input Voltage	V_{in}	0	5.5	V
DC Output Voltage	V_{out}	0	V_{CC}	V
Operating Temperature	T_A	–40	+ 125	°C
Input Rise and Fall Time V_{CC} = 5.0 V ±0.5 V	t_r, t_f	0	20	ns/V

Downloaded from Arrow.com.

DC ELECTRICAL CHARACTERISTICS

Parameter	Test Conditions	Symbol	V_{CC} (V)	T_A = 25°C			$T_A \le 85°C$		$T_A \le 125°C$		Unit
				Min	Typ	Max	Min	Max	Min	Max	
Minimum High−Level Input Voltage		V_{IH}	3.0 4.5 5.5	1.2 2.0 2.0			1.2 2.0 2.0		1.2 2.0 2.0		V
Maximum Low−Level Input Voltage		V_{IL}	3.0 4.5 5.5			0.53 0.8 0.8		0.53 0.8 0.8		0.53 0.8 0.8	V
Minimum High−Level Output Voltage V_{IN} = V_{IH} or V_{IL}	V_{IN} = V_{IH} or V_{IL} I_{OH} = − 50 μA	V_{OH}	3.0 4.5	2.9 4.4	3.0 4.5		2.9 4.4		2.9 4.4		V
	V_{IN} = V_{IH} or V_{IL} I_{OH} = −4 mA I_{OH} = −8 mA		3.0 4.5	2.58 3.94			2.48 3.80		2.34 3.66		
Maximum Low−Level Output Voltage V_{IN} = V_{IH} or V_{IL}	V_{IN} = V_{IH} or V_{IL} I_{OL} = 50 μA	V_{OL}	3.0 4.5		0.0 0.0	0.1 0.1		0.1 0.1		0.1 0.1	V
	V_{IN} = V_{IH} or V_{IL} I_{OL} = 4 mA I_{OL} = 8 mA		3.0 4.5			0.36 0.36		0.44 0.44		0.52 0.52	
Maximum Input Leakage Current	V_{IN} = 5.5 V or GND	I_{IN}	0 to 5.5			±0.1		±1.0		±1.0	μA
Maximum Quiescent Supply Current	V_{IN} = V_{CC} or GND	I_{CC}	5.5			2.0		20		40	μA
Quiescent Supply Current	Input: V_{IN} = 3.4 V	I_{CCT}	5.5			1.35		1.50		1.65	mA
Output Leakage Current	V_{OUT} = 5.5 V	I_{OPD}	0.0			0.5		5.0		10	μA

AC ELECTRICAL CHARACTERISTICS (Input t_r = t_f = 3.0ns)

Characteristic	Test Conditions	Symbol	T_A = 25°C			$T_A \le 85°C$		$T_A \le 125°C$		Unit
			Min	Typ	Max	Min	Max	Max	Max	
Maximum Propagation Delay, Input A or B to Y	V_{CC} = 3.0 ± 0.3V C_L = 15 pF C_L = 50 pF	t_{PLH}, t_{PHL}		6.2 8.7	8.8 12.3		10.5 14.0		14.0 17.5	ns
	V_{CC} = 5.0 ± 0.5V C_L = 15 pF C_L = 50 pF			4.3 5.8	5.9 7.9		7.0 9.0		9.0 11.0	
Maximum Input Capacitance		C_{in}		4	10		10		10	pF
Power Dissipation Capacitance (Note 1)		C_{PD}	Typical @ 25°C, V_{CC} = 5.0V							
					20					pF

1. C_{PD} is defined as the value of the internal equivalent capacitance which is calculated from the operating current consumption without load. Average operating current can be obtained by the equation: $I_{CC(OPR)} = C_{PD} \bullet V_{CC} \bullet f_{in} + I_{CC}/4$ (per gate). C_{PD} is used to determine the no−load dynamic power consumption; $P_D = C_{PD} \bullet V_{CC}^2 \bullet f_{in} + I_{CC} \bullet V_{CC}$.7

NOISE CHARACTERISTICS (Input t_r = t_f = 3.0 ns, C_L = 50pF, V_{CC} = 5.0 V)

Characteristic	Symbol	T_A = 25°C		Unit
		Typ	Max	
Quiet Output Maximum Dynamic V_{OL}	V_{OLP}	0.3	0.8	V
Quiet Output Minimum Dynamic V_{OL}	V_{OLV}	−0.3	−0.8	V
Minimum High Level Dynamic Input Voltage	V_{IHD}		3.5	V
Maximum Low Level Dynamic Input Voltage	V_{ILD}		1.5	V

Downloaded from Arrow.com.

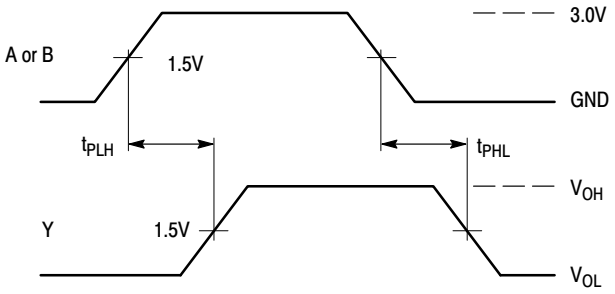

Figure 3. Switching Waveforms

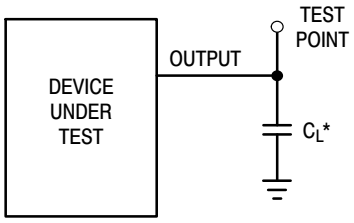

*Includes all probe and jig capacitance

Figure 4. Test Circuit

ORDERING INFORMATION

Device	Package	Shipping†
MC74VHCT08ADR2	SOIC−14	2500 Units / Tape & Reel
MC74VHCT08ADR2G	SOIC−14 (Pb−Free)	
MC74VHCT08ADTR2	TSSOP−14*	2500 Units / Tape &Reel
MC74VHCT08ADTR2G	TSSOP−14*	
MC74VHCT08AM	SOEIAJ−14	50 Units / Rail
MC74VHCT08AMG	SOEIAJ−14 (Pb−Free)	
MC74VHCT08AMEL	SOEIAJ−14	2000 Units / Tape & Reel
MC74VHCT08AMELG	SOEIAJ−14 (Pb−Free)	

†For information on tape and reel specifications, including part orientation and tape sizes, please refer to our Tape and Reel Packaging Specifications Brochure, BRD8011/D.
*These packages are inherently Pb−Free.

Downloaded from Arrow.com.

PACKAGE DIMENSIONS

SOIC−14
D SUFFIX
CASE 751A−03
ISSUE J

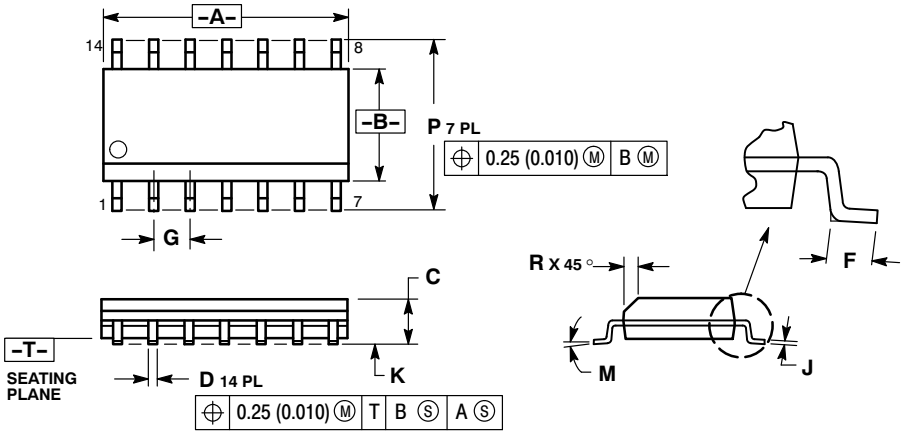

NOTES:
1. DIMENSIONING AND TOLERANCING PER ANSI Y14.5M, 1982.
2. CONTROLLING DIMENSION: MILLIMETER.
3. DIMENSIONS A AND B DO NOT INCLUDE MOLD PROTRUSION.
4. MAXIMUM MOLD PROTRUSION 0.15 (0.006) PER SIDE.
5. DIMENSION D DOES NOT INCLUDE DAMBAR PROTRUSION. ALLOWABLE DAMBAR PROTRUSION SHALL BE 0.127 (0.005) TOTAL IN EXCESS OF THE D DIMENSION AT MAXIMUM MATERIAL CONDITION.

	MILLIMETERS		INCHES	
DIM	MIN	MAX	MIN	MAX
A	8.55	8.75	0.337	0.344
B	3.80	4.00	0.150	0.157
C	1.35	1.75	0.054	0.068
D	0.35	0.49	0.014	0.019
F	0.40	1.25	0.016	0.049
G	1.27 BSC		0.050 BSC	
J	0.19	0.25	0.008	0.009
K	0.10	0.25	0.004	0.009
M	0 °	7 °	0 °	7 °
P	5.80	6.20	0.228	0.244
R	0.25	0.50	0.010	0.019

SOLDERING FOOTPRINT

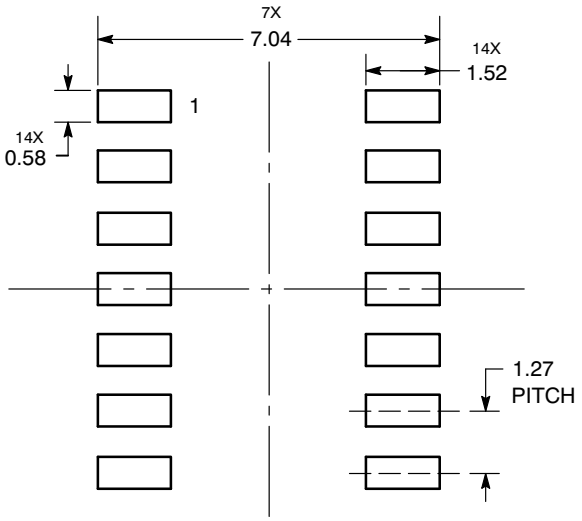

DIMENSIONS: MILLIMETERS

Downloaded from Arrow.com.

PACKAGE DIMENSIONS

TSSOP−14
CASE 948G−01
ISSUE B

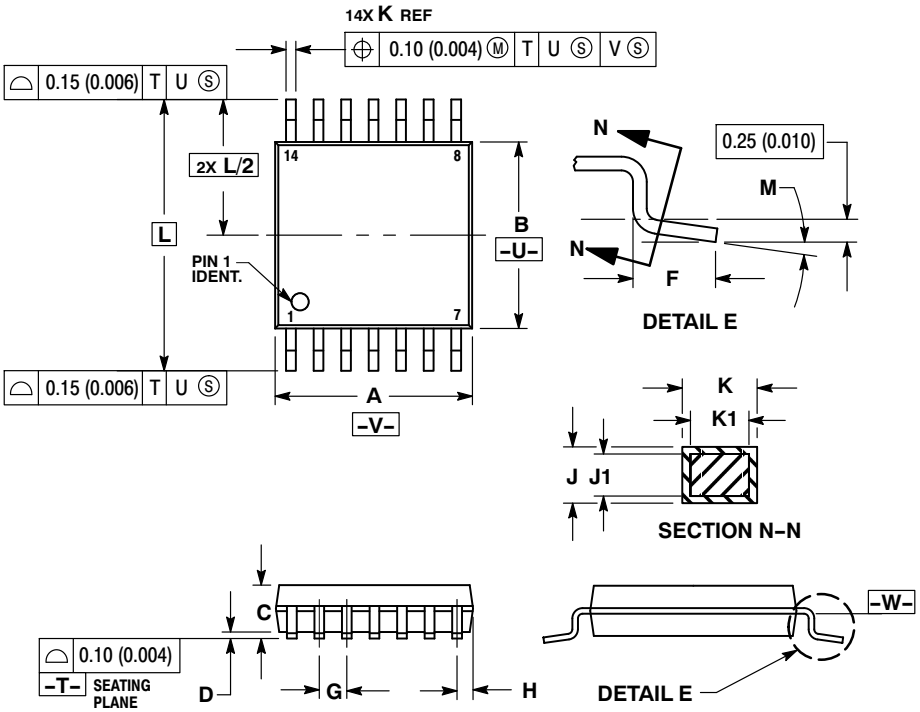

NOTES:
1. DIMENSIONING AND TOLERANCING PER ANSI Y14.5M, 1982.
2. CONTROLLING DIMENSION: MILLIMETER.
3. DIMENSION A DOES NOT INCLUDE MOLD FLASH, PROTRUSIONS OR GATE BURRS. MOLD FLASH OR GATE BURRS SHALL NOT EXCEED 0.15 (0.006) PER SIDE.
4. DIMENSION B DOES NOT INCLUDE INTERLEAD FLASH OR PROTRUSION. INTERLEAD FLASH OR PROTRUSION SHALL NOT EXCEED 0.25 (0.010) PER SIDE.
5. DIMENSION K DOES NOT INCLUDE DAMBAR PROTRUSION. ALLOWABLE DAMBAR PROTRUSION SHALL BE 0.08 (0.003) TOTAL IN EXCESS OF THE K DIMENSION AT MAXIMUM MATERIAL CONDITION.
6. TERMINAL NUMBERS ARE SHOWN FOR REFERENCE ONLY.
7. DIMENSION A AND B ARE TO BE DETERMINED AT DATUM PLANE −W−.

	MILLIMETERS		INCHES	
DIM	MIN	MAX	MIN	MAX
A	4.90	5.10	0.193	0.200
B	4.30	4.50	0.169	0.177
C	---	1.20	---	0.047
D	0.05	0.15	0.002	0.006
F	0.50	0.75	0.020	0.030
G	0.65 BSC		0.026 BSC	
H	0.50	0.60	0.020	0.024
J	0.09	0.20	0.004	0.008
J1	0.09	0.16	0.004	0.006
K	0.19	0.30	0.007	0.012
K1	0.19	0.25	0.007	0.010
L	6.40 BSC		0.252 BSC	
M	0 °	8 °	0 °	8 °

SOLDERING FOOTPRINT

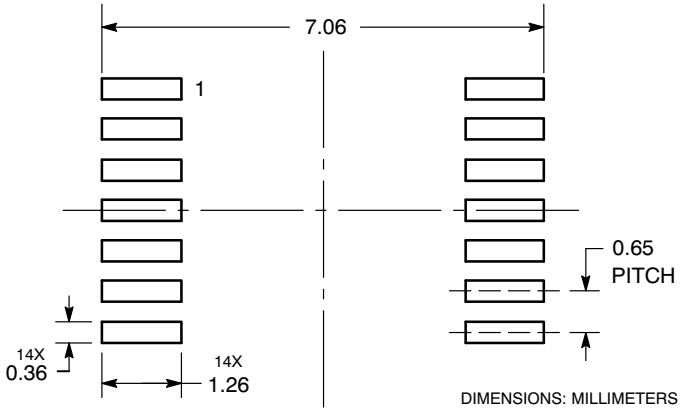

Downloaded from Arrow.com.

PACKAGE DIMENSIONS

SOEIAJ−14
CASE 965−01
ISSUE B

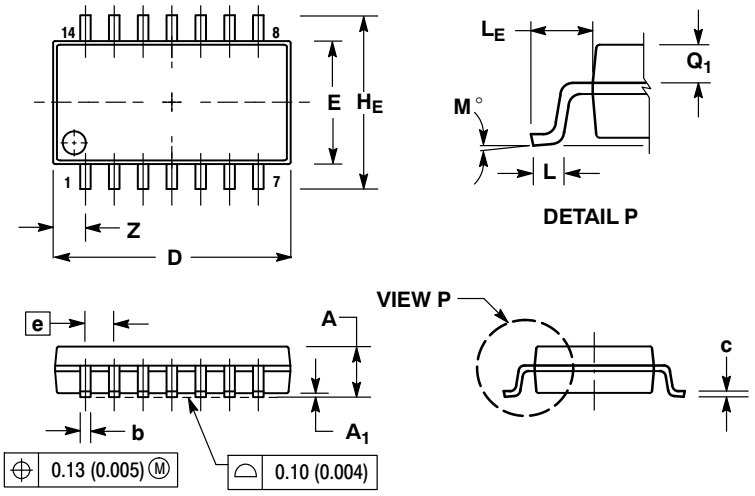

NOTES:
1. DIMENSIONING AND TOLERANCING PER ANSI Y14.5M, 1982.
2. CONTROLLING DIMENSION: MILLIMETER.
3. DIMENSIONS D AND E DO NOT INCLUDE MOLD FLASH OR PROTRUSIONS AND ARE MEASURED AT THE PARTING LINE. MOLD FLASH OR PROTRUSIONS SHALL NOT EXCEED 0.15 (0.006) PER SIDE.
4. TERMINAL NUMBERS ARE SHOWN FOR REFERENCE ONLY.
5. THE LEAD WIDTH DIMENSION (b) DOES NOT INCLUDE DAMBAR PROTRUSION. ALLOWABLE DAMBAR PROTRUSION SHALL BE 0.08 (0.003) TOTAL IN EXCESS OF THE LEAD WIDTH DIMENSION AT MAXIMUM MATERIAL CONDITION. DAMBAR CANNOT BE LOCATED ON THE LOWER RADIUS OR THE FOOT. MINIMUM SPACE BETWEEN PROTRUSIONS AND ADJACENT LEAD TO BE 0.46 (0.018).

	MILLIMETERS		INCHES	
DIM	MIN	MAX	MIN	MAX
A	---	2.05	---	0.081
A_1	0.05	0.20	0.002	0.008
b	0.35	0.50	0.014	0.020
c	0.10	0.20	0.004	0.008
D	9.90	10.50	0.390	0.413
E	5.10	5.45	0.201	0.215
e	1.27 BSC		0.050 BSC	
H_E	7.40	8.20	0.291	0.323
L	0.50	0.85	0.020	0.033
L_E	1.10	1.50	0.043	0.059
M	0 °	10 °	0 °	10 °
Q_1	0.70	0.90	0.028	0.035
Z	---	1.42	---	0.056

ON Semiconductor and ON are registered trademarks of Semiconductor Components Industries, LLC (SCILLC). SCILLC reserves the right to make changes without further notice to any products herein. SCILLC makes no warranty, representation or guarantee regarding the suitability of its products for any particular purpose, nor does SCILLC assume any liability arising out of the application or use of any product or circuit, and specifically disclaims any and all liability, including without limitation special, consequential or incidental damages. “Typical” parameters which may be provided in SCILLC data sheets and/or specifications can and do vary in different applications and actual performance may vary over time. All operating parameters, including “Typicals” must be validated for each customer application by customer’s technical experts. SCILLC does not convey any license under its patent rights nor the rights of others. SCILLC products are not designed, intended, or authorized for use as components in systems intended for surgical implant into the body, or other applications intended to support or sustain life, or for any other application in which the failure of the SCILLC product could create a situation where personal injury or death may occur. Should Buyer purchase or use SCILLC products for any such unintended or unauthorized application, Buyer shall indemnify and hold SCILLC and its officers, employees, subsidiaries, affiliates, and distributors harmless against all claims, costs, damages, and expenses, and reasonable attorney fees arising out of, directly or indirectly, any claim of personal injury or death associated with such unintended or unauthorized use, even if such claim alleges that SCILLC was negligent regarding the design or manufacture of the part. SCILLC is an Equal Opportunity/Affirmative Action Employer. This literature is subject to all applicable copyright laws and is not for resale in any manner.

PUBLICATION ORDERING INFORMATION

LITERATURE FULFILLMENT:
Literature Distribution Center for ON Semiconductor
P.O. Box 5163, Denver, Colorado 80217 USA
Phone: 303−675−2175 or 800−344−3860 Toll Free USA/Canada
Fax: 303−675−2176 or 800−344−3867 Toll Free USA/Canada
Email: orderlit@onsemi.com

N. American Technical Support: 800−282−9855 Toll Free USA/Canada
Europe, Middle East and Africa Technical Support:
Phone: 421 33 790 2910
Japan Customer Focus Center
Phone: 81−3−5773−3850

ON Semiconductor Website: **www.onsemi.com**

Order Literature: http://www.onsemi.com/orderlit

For additional information, please contact your local Sales Representative

MC74VHCT08A/D

Downloaded from Arrow.com.