Panel Potentiometer

Model P230

Features:

- 24 mm rotary
- Conductive plastic element
- 500,000 cycle life
- Metal shaft
- Brass bushing

RoHS 2 compliant

Model Styles Available

Side Adjust , Solder Lugs	P230

Electrical

Resistance Range, Ohms	500-1M
Standard Resistance Tolerance	± 20%
Residual Resistance	20 ohms max.
Input Voltage, maximum	500 Vac max.
Power rating, Watts	0.5W- B taper, 0.25W-others
Dielectric Strength	500Vac, I minute
Insulation Resistance, Minimum	100M ohms at 250Vdc
Sliding Noise	100mV max.
Actual Electrical Travel, Nominal	260°

Mechanical

Total Mechanical Travel	300°± 10°
Static Stop Strength	70 oz-in
Rotational Torque	0.5 to 1.25 oz-in

Environmental

Operating Temperature Range	-20°C to +70°C
Rotational Life	500,000 cycles

General Note
TT Electronics reserves the right to make changes in product specification without notice or liability. All information is subject to TT Electronics' own data and is considered accurate at time of going to print.

© TT electronics plc

TT Electronics | BI Technologies
413 Rood RD, Suite 7
Calexico, CA 92231
Ph: +1 714 447 2345
www.ttelectronics.com/bi-technologies

Ordering

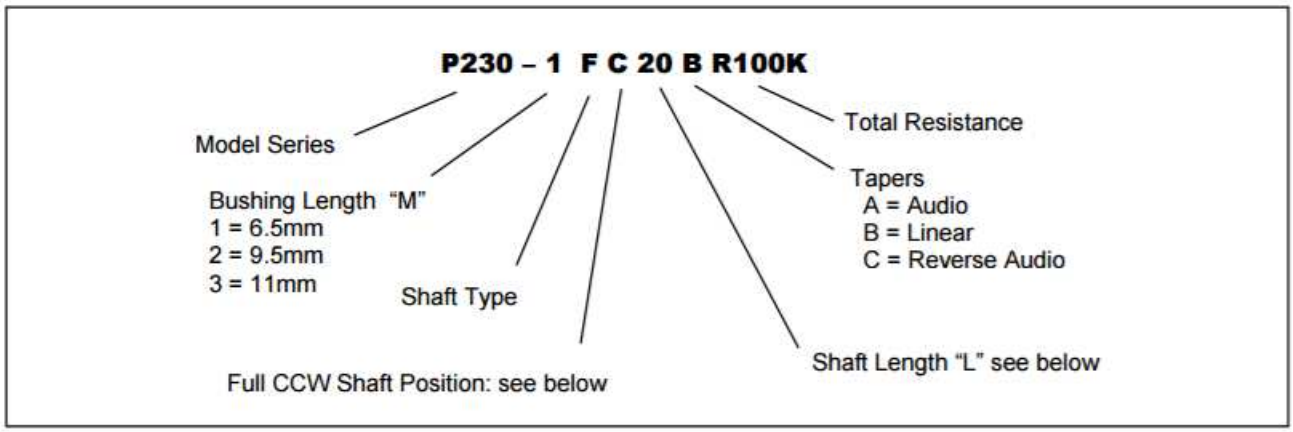

Shaft Types

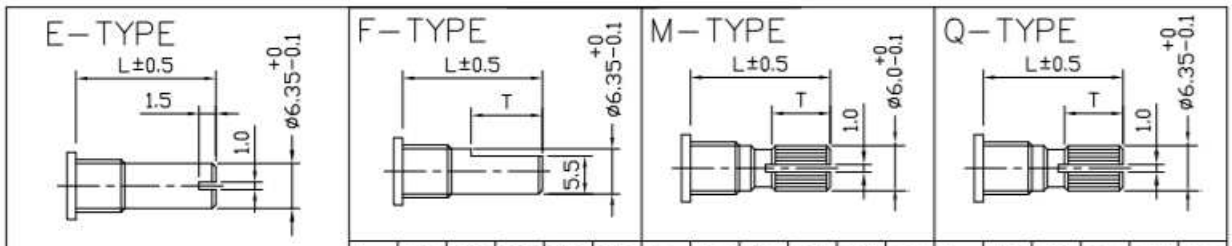

							L	15	20	25	30	35	L	16	19	25	30	35	L	16	19	25	30	35
L	15	20	22	25	30	35	T	7	12	12	12	12	T	7.5	7.5	12	12	12	T	6	6	12	12	12

Shaft Position (F-Type Shaft)

Dashed lines on Type "C" and Type "A" shows position of adjustment slot for E-Type shaft

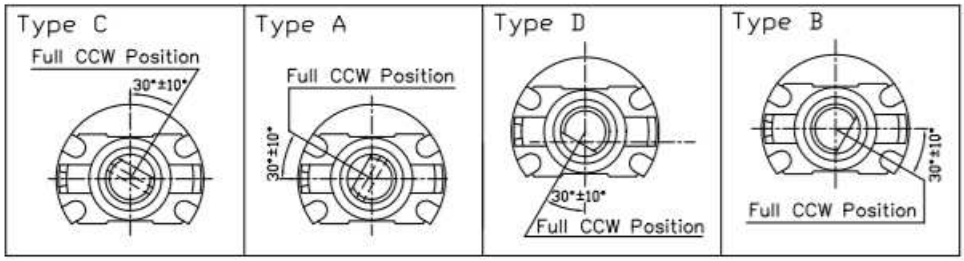

STANDARD RESISTANCE VALUES, OHMS

500	1K	2K	5K	10K	20K	50K	100K	200K	500K	1MEG

General Note
TT Electronics reserves the right to make changes in product specification without notice or liability. All information is subject to TT Electronics' own data and is considered accurate at time of going to print.

© TT electronics plc

TT Electronics | BI Technologies
413 Rood RD, Suite 7
Calexico, CA 92231
Ph: +1 714 447 2345
www.ttelectronics.com/bi-technologies

Outline Drawings

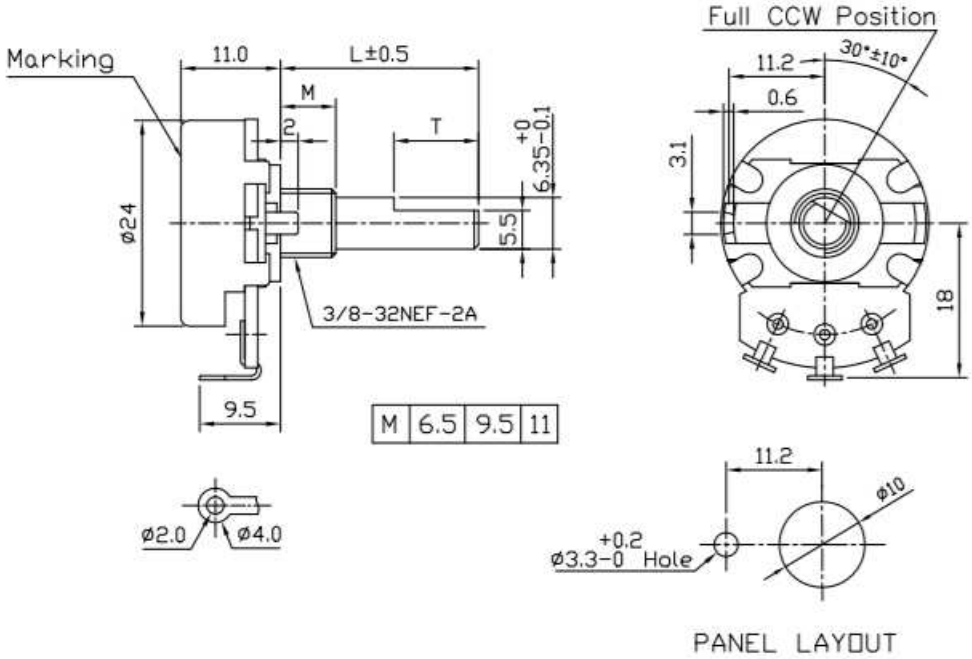

CIRCUIT DIAGRAM

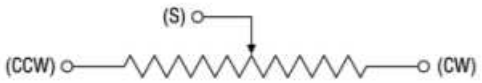

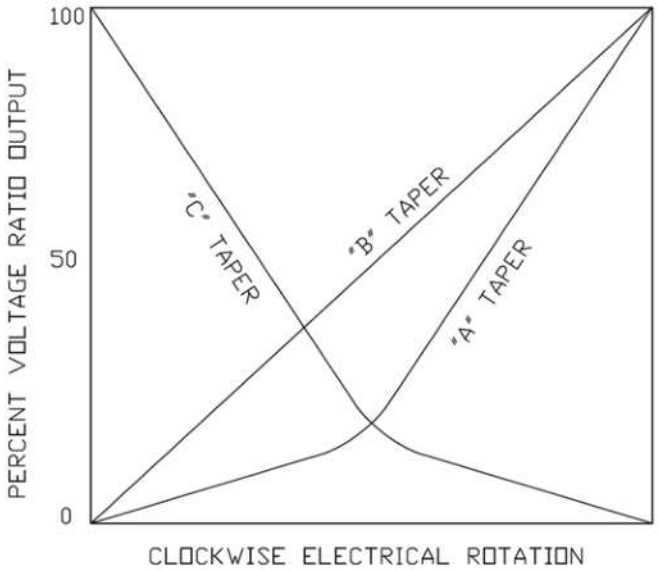

General Note
TT Electronics reserves the right to make changes in product specification without notice or liability. All information is subject to TT Electronics' own data and is considered accurate at time of going to print.

© TT electronics plc

TT Electronics | BI Technologies
413 Rood RD, Suite 7
Calexico, CA 92231

Ph: +1 714 447 2345
www.ttelectronics.com/bi-technologies