MATERIAL SPECIFICATIONS:
Housing: LCP
Contacts: Phosphor bronze, Tin plated

ELECTRICAL SPECIFICATIONS:
Rated current: 3 Amps max.
Rated voltage: 160V

ENVIRONMENTAL SPECIFICATIONS:
Operating Temperature: -40°C ~ +105°C

RoHS COMPLIANT

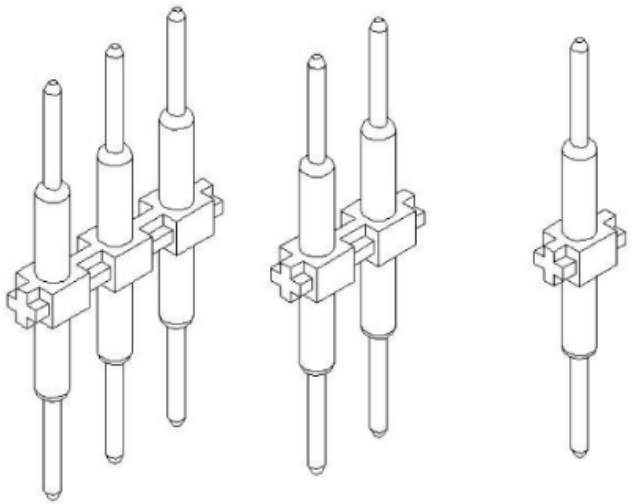

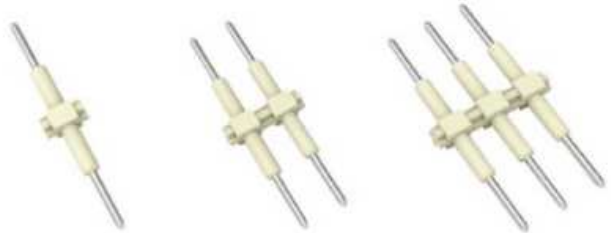

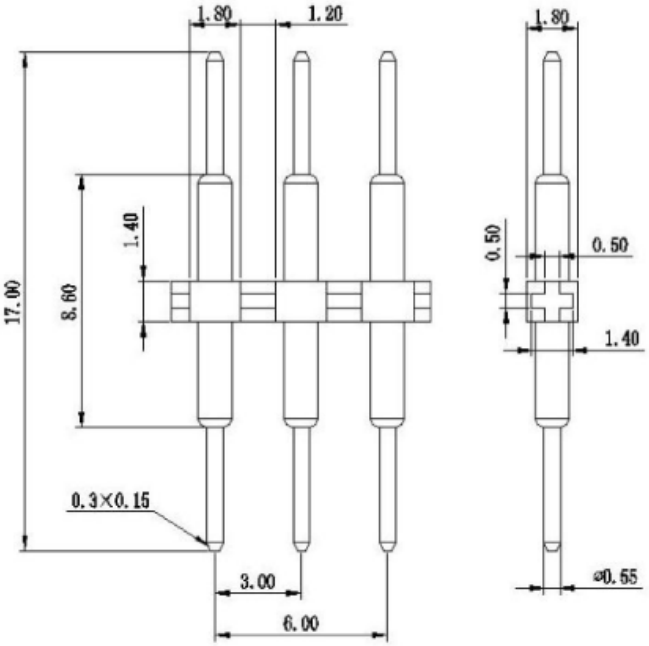

NOTE: REPLACE "X" IN PART NUMBER WITH NUMBER OF POSITIONS

REVISIONS				
REV	DATE	CHANGE	CHNG	CHCK

TOLERANCE
UNLESS OTHERWISE SPECIFIED
X ± 1
X.X ± 0.4
X.XX ± 0.13

Power Dynamics, Inc.
Phone: 973 560-0019 Whippany, New Jersey Fax: 973 560-0076

PART: 3mm PITCH JUMPERS FOR PD-LTB3-XP & PD-LTB6-2P

DRAWN BY PB	DATE: 3/27/18	PART #: PD-LJ3-XP	SHEET 1 of 1
CHECK BY	DATE:	MC: B07-1P	ALL DIMENSIONS FOR REFERENCE ONLY DIMENSIONS ARE IN MILLIMETERS
APPR BY	DATE:	SCALE: NTS	REV: