PASTERNACK®
THE ENGINEER'S RF SOURCE

SP4T Electromechanical Relay Latching Switch, Terminated, DC to 18 GHz, up to 90W, 28V, SMA

Features

- Single Pole Four Throw
- DC to 18 GHz Frequency Range
- Isolation greater than 80 dB typical
- 5M Cycle Min Operating Life
- +28 Volt DC
- 90 Watt average Power
- Latching Actuator
- Internally Terminated
- -25 to +70°C Operating Temperature
- Insertion Loss as low as 0.15 dB Max
- VSWR as low as 1.2:1 max
- SMA Female RF connectors
- 15 Pin D-Sub Connector for DC Control
- Hot Switching Capability - Consult Factory
- S-Parameter Data available upon request

Applications

- High Performance Relay Switch
- Military Communications
- Communications Systems
- Test & Measurement

Description

The PE71S6365 is a Single Pole Four Throw (SP4T) electromechanical relay switch that operates across a wide frequency range of DC to 18 GHz and can handle up to 90 Watts of CW input power in a break before make condition. The design features a Latching actuator and is rated for 5M life cycles for high reliability operation. Impressive performance includes insertion loss less than 0.15 dB typical and isolation greater than 80 dB typical. The Latching actuator has 50 Ohm Terminations and a +28 Vdc bias voltage, and operates over a temperature range of -25°C to +70°C. The rugged and compact package assembly supports SMA Female connectors and a 15 Pin D-Sub Connector for DC Control. And for highly reliable operation, the model is guranteed to meet MIL-STD-202 environmental test conditions for shock and random vibration.

Electrical Specifications

Switch Type	SP4T, Terminated
Actuator Type	Latching
Switching Sequence	Break before Make

Description	Minimum	Typical	Maximum	Units
Frequency Range	DC		18	GHz
Impedance		50		Ohms
Termination Impedance		50		Ohms
Operating Voltage	26	28	30	Volts
Actuating Current @ 28 Volts		90		mA
VSWR		1.2:1	1.4:1	
Insertion Loss		0.15	0.4	dB
Isolation	80	80		dB
Input Power (CW)			60	Watts
Termination Input Power (CW)			5	Watts
Switching Time			20	ms Max

Click the following link (or enter part number in "SEARCH" on website) to obtain additional part information including price, inventory and certifications: SP4T Electromechanical Relay Latching Switch, Terminated, DC to 18 GHz, up to 90W, 28V, SMA PE71S6365

Pasternack Enterprises, Inc. • P.O. Box 16759, Irvine, CA 92623
Phone: (866) 727-8376 or (949) 261-1920 • **Fax:** (949) 261-7451
Sales@Pasternack.com • Techsupport@Pasternack.com

© 2017 Pasternack Enterprises All Rights Reserved

SP4T Electromechanical Relay Latching Switch, Terminated, DC to 18 GHz, up to 90W, 28V, SMA

Performance by Frequency

Description	F1	F2	F3	F4	F5	Units
Frequency Range	DC to 6	6 to 12	12 to 18			GHz
VSWR, Max	1.2:1	1.3:1	1.4:1			
Insertion Loss, Max	0.15	0.25	0.4			dB
Isolation, Min	80	80	80			dB
Input Power, Typ (CW)	90	75	60			Watts

Mechanical Specifications

Size

Package Type	Connectorized
Operating Life	5,000,000 Cycles

Connectors

RF Connector Type	SMA Female
Control Connector	15 Pin D-Sub

Environmental Specifications

Temperature

Operating Range	-25 to +70 deg C
Storage Range	-55 to +100 deg C
Shock	MIL-STD-202 Method 213, Cond. D 500G Non Operating
Vibration	MIL-STD-202 Method 214, Cond. D 10G RMS Non Operating

Compliance Certifications (see product page for current document)

Plotted and Other Data

Notes:

Click the following link (or enter part number in "SEARCH" on website) to obtain additional part information including price, inventory and certifications: SP4T Electromechanical Relay Latching Switch, Terminated, DC to 18 GHz, up to 90W, 28V, SMA PE71S6365

Pasternack Enterprises, Inc. • P.O. Box 16759, Irvine, CA 92623
Phone: (866) 727-8376 or (949) 261-1920 • **Fax:** (949) 261-7451
Sales@Pasternack.com • Techsupport@Pasternack.com

© 2017 Pasternack Enterprises All Rights Reserved

SP4T Electromechanical Relay Latching Switch, Terminated, DC to 18 GHz, up to 90W, 28V, SMA

Typical Performance Data

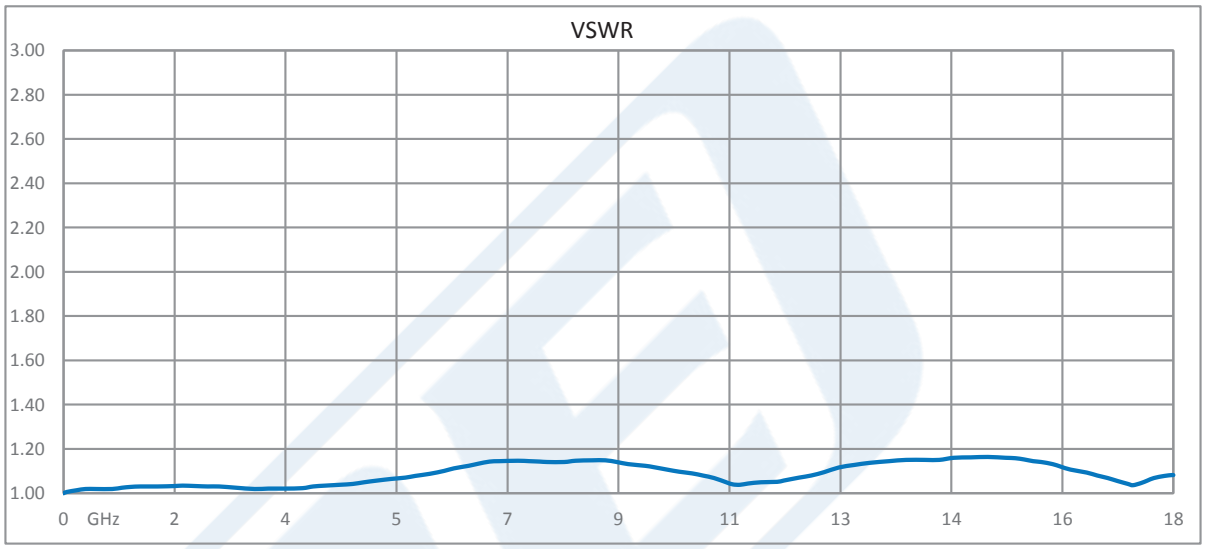

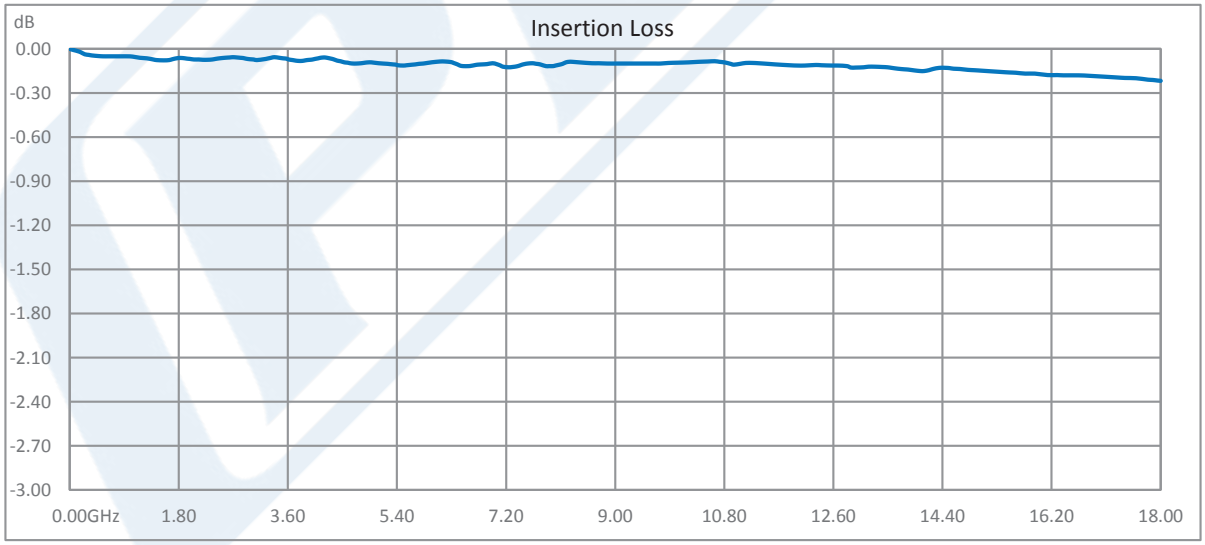

Click the following link (or enter part number in "SEARCH" on website) to obtain additional part information including price, inventory and certifications: SP4T Electromechanical Relay Latching Switch, Terminated, DC to 18 GHz, up to 90W, 28V, SMA PE71S6365

Pasternack Enterprises, Inc. • P.O. Box 16759, Irvine, CA 92623
Phone: (866) 727-8376 or (949) 261-1920 • **Fax:** (949) 261-7451
Sales@Pasternack.com • Techsupport@Pasternack.com

© 2017 Pasternack Enterprises All Rights Reserved

SP4T Electromechanical Relay Latching Switch, Terminated, DC to 18 GHz, up to 90W, 28V, SMA

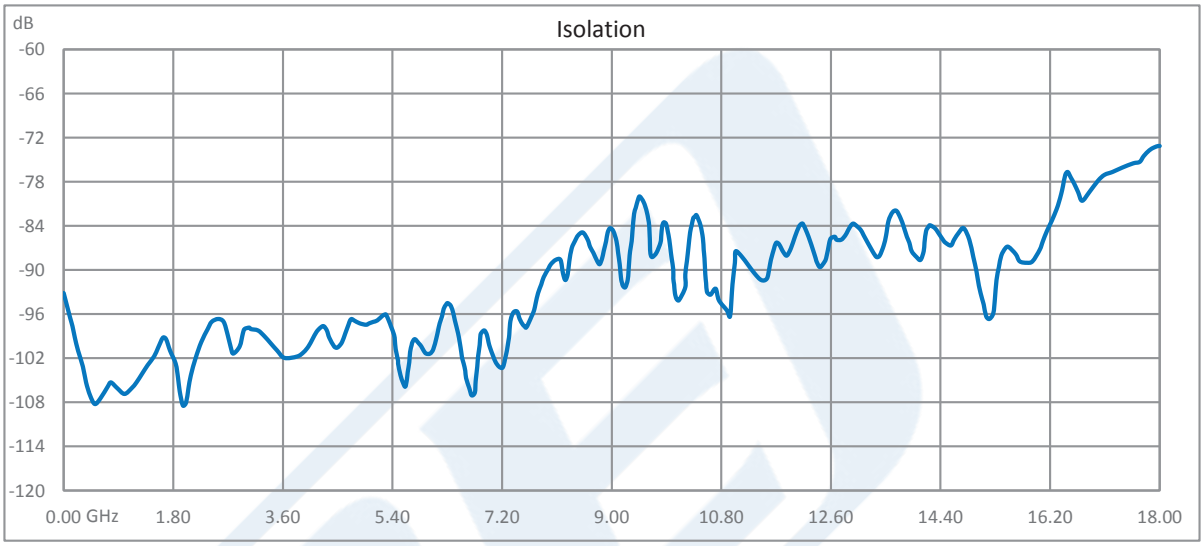

Click the following link (or enter part number in "SEARCH" on website) to obtain additional part information including price, inventory and certifications: SP4T Electromechanical Relay Latching Switch, Terminated, DC to 18 GHz, up to 90W, 28V, SMA PE71S6365

Pasternack Enterprises, Inc. • P.O. Box 16759, Irvine, CA 92623
Phone: (866) 727-8376 or (949) 261-1920 • **Fax:** (949) 261-7451
Sales@Pasternack.com • Techsupport@Pasternack.com

© 2017 Pasternack Enterprises All Rights Reserved

SP4T Electromechanical Relay Latching Switch, Terminated, DC to 18 GHz, up to 90W, 28V, SMA

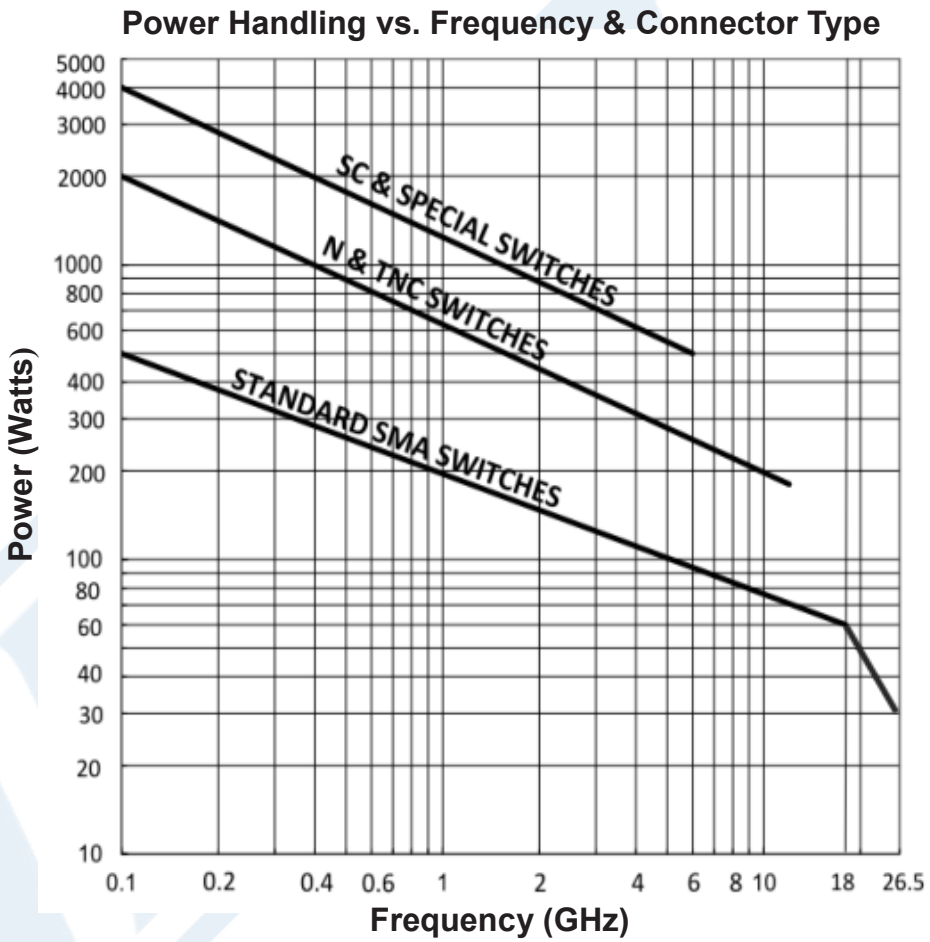

Environmental and Test Conditions:

- Ambient temperature of 25℃ or less
- Altitude: Sea Level
- Load VSWR: 1.20:1 max.
- Cold Switching

Click the following link (or enter part number in "SEARCH" on website) to obtain additional part information including price, inventory and certifications: SP4T Electromechanical Relay Latching Switch, Terminated, DC to 18 GHz, up to 90W, 28V, SMA PE71S6365

Pasternack Enterprises, Inc. • P.O. Box 16759, Irvine, CA 92623
Phone: (866) 727-8376 or (949) 261-1920 • **Fax:** (949) 261-7451
Sales@Pasternack.com • Techsupport@Pasternack.com

© 2017 Pasternack Enterprises All Rights Reserved

PASTERNACK®
THE ENGINEER'S RF SOURCE

SP4T Electromechanical Relay Latching Switch, Terminated, DC to 18 GHz, up to 90W, 28V, SMA

Electromechanical Relay Switches Technical Data PE71S6365

SP4T Electromechanical Relay Latching Switch, Terminated, DC to 18 GHz, up to 90W, 28V, SMA from Pasternack Enterprises has same day shipment for domestic and International orders. Our RF, microwave and millimeter wave products maintain a 99.4% availability and are part of the broadest selection in the industry.

Click the following link (or enter part number in "SEARCH" on website) to obtain additional part information including price, inventory and certifications: SP4T Electromechanical Relay Latching Switch, Terminated, DC to 18 GHz, up to 90W, 28V, SMA PE71S6365

URL: https://www.pasternack.com/sp4t-electromechanical-relay-latching-switch-terminated-18-ghz-60w-28v-sma-pe71s6365-p.aspx

The information contained in this document is accurate to the best of our knowledge and representative of the part described herein. It may be necessary to make modifications to the part and/or the documentation of the part, in order to implement improvements. Pasternack reserves the right to make such changes as required. Unless otherwise stated, all specifications are nominal. Pasternack does not make any representation or warranty regarding the suitability of the part described herein for any particular purpose, and Pasternack does not assume any liability arising out of the use of any part or documentation.

Pasternack Enterprises, Inc. • P.O. Box 16759, Irvine, CA 92623
Phone: (866) 727-8376 or (949) 261-1920 • **Fax:** (949) 261-7451
Sales@Pasternack.com • Techsupport@Pasternack.com

© 2017 Pasternack Enterprises All Rights Reserved

PE71S6365 CAD Drawing

SP4T Electromechanical Relay Latching Switch, Terminated,
DC to 18 GHz, up to 90W, 28V, SMA

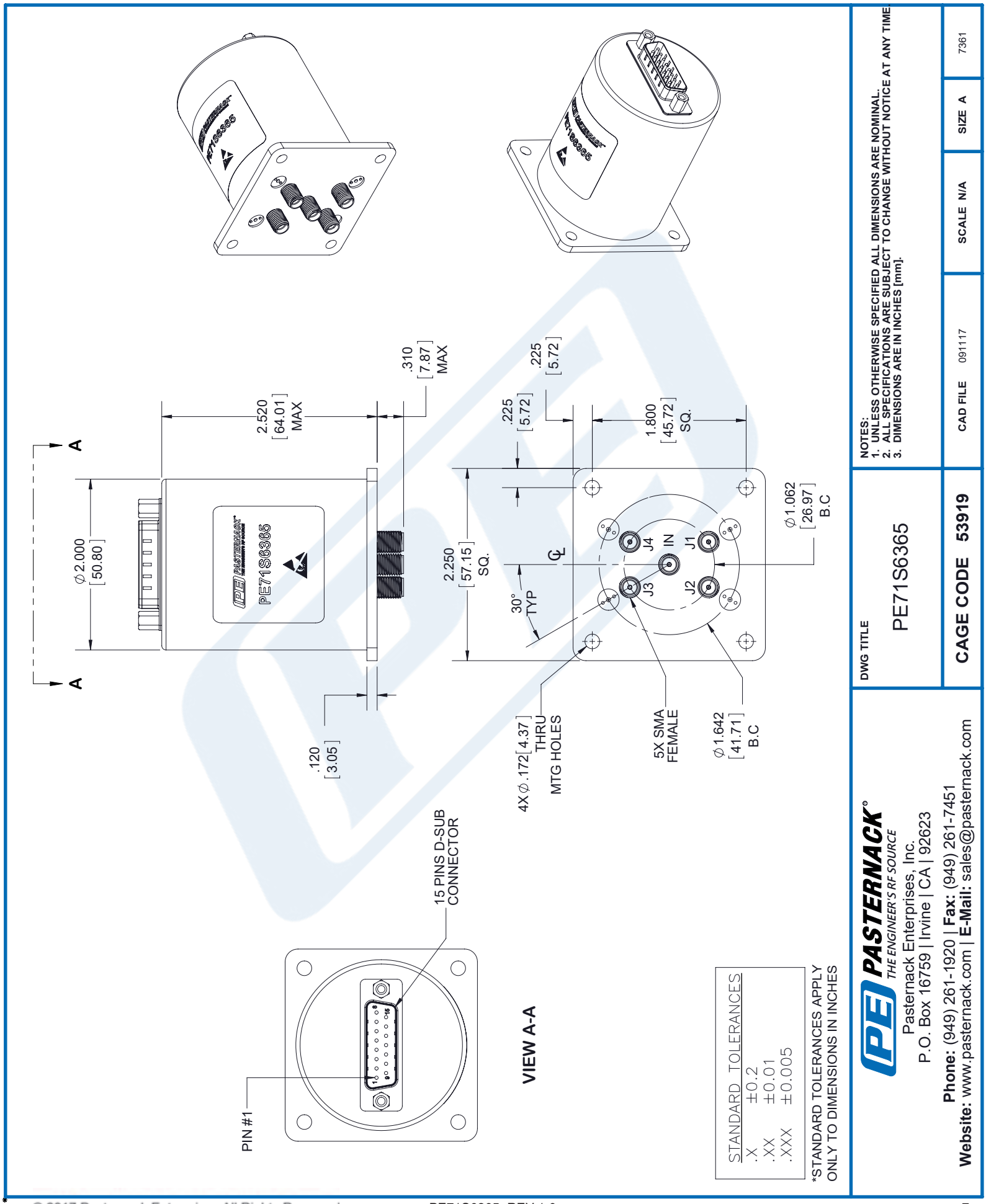

© 2017 Pasternack Enterprises All Rights Reserved

PE71S6365 CAD Drawing

SP4T Electromechanical Relay Latching Switch, Terminated,
DC to 18 GHz, up to 90W, 28V, SMA

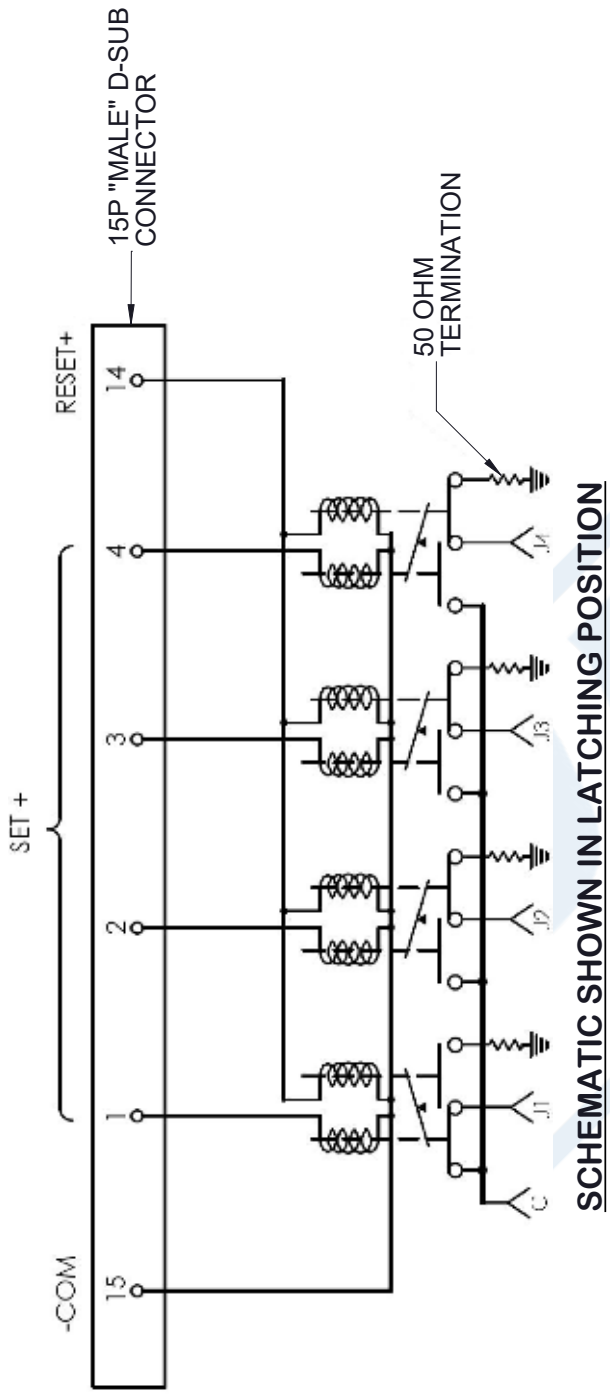

SCHEMATIC SHOWN IN LATCHING POSITION

(COIL 1 SHOWN LAST ENERGIZED)

TERMINALS / D-SUB PIN ASSIGNMENT	RF PATH J1	J2	J3	J4
1 (SET+)	ON	OFF	OFF	OFF
2 (SET+)	OFF	ON	OFF	OFF
3 (SET+)	OFF	OFF	ON	OFF
4 (SET+)	OFF	OFF	OFF	ON
14 (RESET+)	ALL OFF			

PIN 15. -COM

STANDARD TOLERANCES	
.X	±0.2
.XX	±0.01
.XXX	±0.005

*STANDARD TOLERANCES APPLY ONLY TO DIMENSIONS IN INCHES

NOTES:
1. UNLESS OTHERWISE SPECIFIED ALL DIMENSIONS ARE NOMINAL.
2. ALL SPECIFICATIONS ARE SUBJECT TO CHANGE WITHOUT NOTICE AT ANY TIME
3. DIMENSIONS ARE IN INCHES [mm].

DWG TITLE PE71S6365

CAD FILE 091117 | SCALE N/A | SIZE A | 7361

CAGE CODE 53919

PASTERNACK® THE ENGINEER'S RF SOURCE
Pasternack Enterprises, Inc.
P.O. Box 16759 | Irvine | CA | 92623
Phone: (949) 261-1920 | **Fax:** (949) 261-7451
Website: www.pasternack.com | **E-Mail:** sales@pasternack.com

© 2017 Pasternack Enterprises All Rights Reserved