PASTERNACK®
THE ENGINEER'S RF SOURCE

Transfer Electromechanical Relay Failsafe Switch, DC to 12 GHz, up to 430W, 28V, N

Features

- Tranfer (DPDT)
- DC to 12 GHz Frequency Range
- Isolation greater than 80 dB typical
- 2M Cycle Min Operating Life
- +28 Volt DC
- 430 Watt average Power
- Failsafe Actuator
- -25 to +70°C Operating Temperature
- Insertion Loss as low as 0.2 dB Max
- VSWR as low as 1.2:1 max
- N Female RF connectors
- 9 Pin D-Sub Connector for DC Control
- Hot Switching Capability - Consult Factory
- S-Parameter Data available upon request

Applications

- High Performance Relay Switch
- Military Communications
- Communications Systems
- Test & Measurement

Description

The PE71S6385 is a Transfer (DPDT) electromechanical relay switch that operates across a wide frequency range of DC to 12 GHz and can handle up to 430 Watts of CW input power in a break before make condition. The design features a Failsafe actuator and is rated for 2M life cycles for high reliability operation. Insertion loss is specified from 0.7 dB maximum and Isolation from 60 dB minimum. The Failsafe actuator has a +28 Vdc bias voltage, and operates over a temperature range of -25°C to +70°C. The rugged and compact package assembly supports N Female connectors and a 9 Pin D-Sub Connector for DC Control. And for highly reliable operation, the model is guranteed to meet MIL-STD-202 environmental test conditions for shock and random vibration.

Electrical Specifications

Switch Type	Transfer
Actuator Type	Failsafe
Switching Sequence	Break before Make

Description	Minimum	Typical	Maximum	Units
Frequency Range	DC		12	GHz
Impedance		50		Ohms
Operating Voltage	26	28	30	Volts
Actuating Current @ 28 Volts		90		mA
VSWR		1.2:1	1.7:1	
Insertion Loss		0.2	0.7	dB
Isolation	60	80		dB
Input Power (CW)			200	Watts
Switching Time			20	ms Max

Click the following link (or enter part number in "SEARCH" on website) to obtain additional part information including price, inventory and certifications: Transfer Electromechanical Relay Failsafe Switch, DC to 12 GHz, up to 430W, 28V, N PE71S6385

Pasternack Enterprises, Inc. • P.O. Box 16759, Irvine, CA 92623
Phone: (866) 727-8376 or (949) 261-1920 • **Fax:** (949) 261-7451
Sales@Pasternack.com • Techsupport@Pasternack.com

© 2017 Pasternack Enterprises All Rights Reserved

PASTERNACK®
THE ENGINEER'S RF SOURCE

Transfer Electromechanical Relay Failsafe Switch, DC to 12 GHz, up to 430W, 28V, N

Electromechanical Relay Switches Technical Data PE71S6385

Performance by Frequency

Description	F1	F2	F3	F4	F5	Units
Frequency Range	DC to 2	2 to 4	4 to 8	8 to 12		GHz
VSWR, Max	1.2:1	1.4:1	1.5:1	1.7:1		
Insertion Loss, Max	0.2	0.4	0.5	0.7		dB
Isolation, Min	80	80	70	60		dB
Input Power, Typ (CW)	430	300	230	200		Watts

Mechanical Specifications

Size

Package Type	Connectorized
Operating Life	2,000,000 Cycles

Connectors

RF Connector Type	N Female
Control Connector	9 Pin D-Sub

Environmental Specifications

Temperature

Operating Range	-25 to +70 deg C
Storage Range	-55 to +100 deg C
Shock	MIL-STD-202 Method 213, Cond. D 500G Non Operating
Vibration	MIL-STD-202 Method 214, Cond. D 10G RMS Non Operating

Compliance Certifications (see product page for current document)

Plotted and Other Data

Notes:

Click the following link (or enter part number in "SEARCH" on website) to obtain additional part information including price, inventory and certifications: Transfer Electromechanical Relay Failsafe Switch, DC to 12 GHz, up to 430W, 28V, N PE71S6385

Pasternack Enterprises, Inc. • P.O. Box 16759, Irvine, CA 92623
Phone: (866) 727-8376 or (949) 261-1920 • **Fax:** (949) 261-7451
Sales@Pasternack.com • Techsupport@Pasternack.com

© 2017 Pasternack Enterprises All Rights Reserved

Transfer Electromechanical Relay Failsafe Switch, DC to 12 GHz, up to 430W, 28V, N

Typical Performance Data

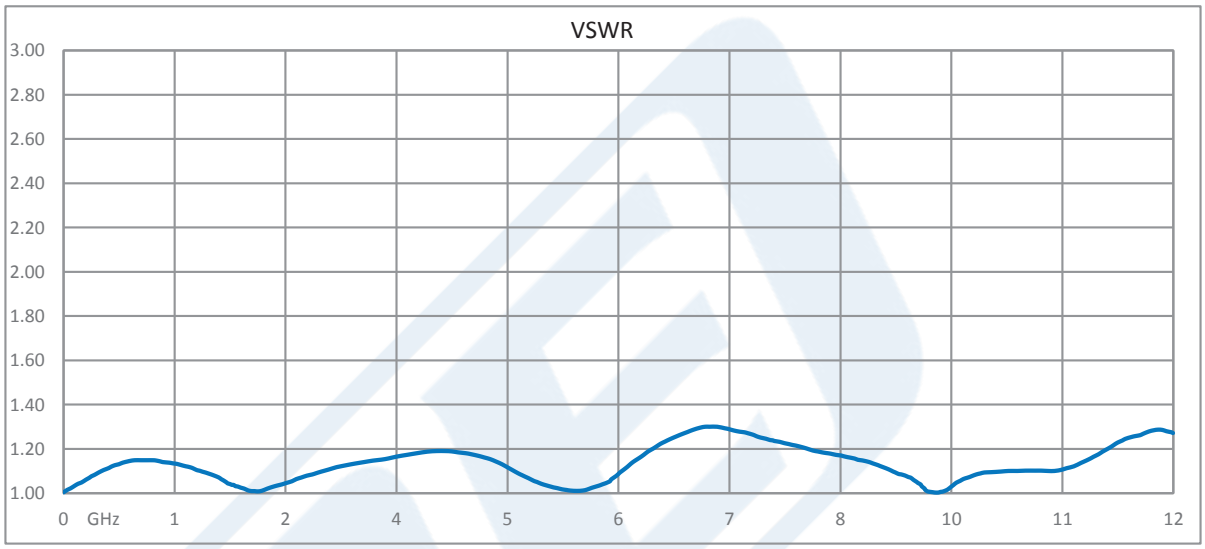

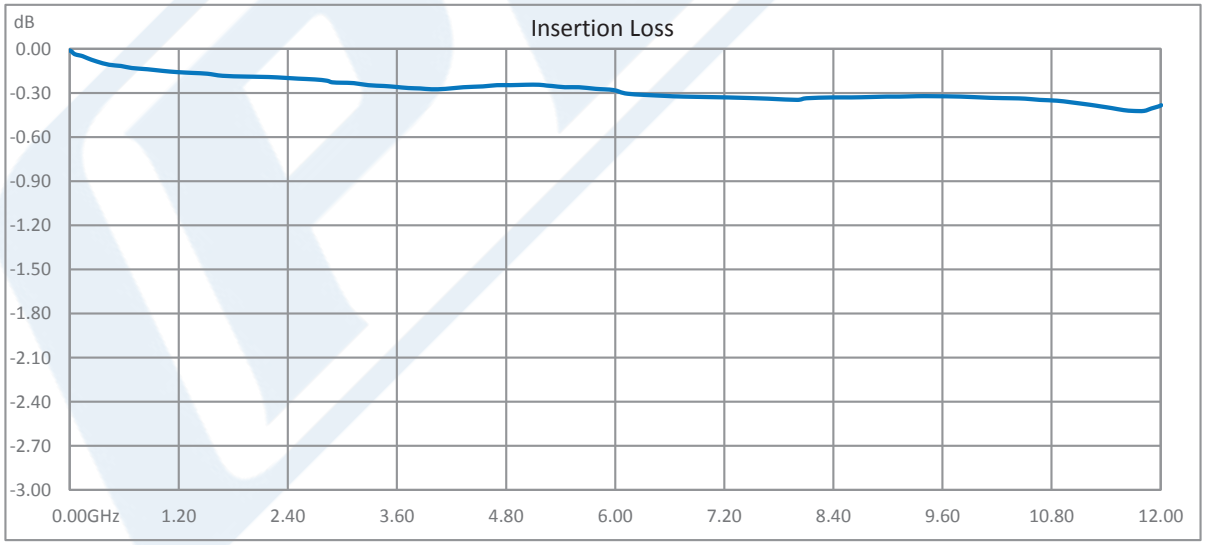

Click the following link (or enter part number in "SEARCH" on website) to obtain additional part information including price, inventory and certifications: Transfer Electromechanical Relay Failsafe Switch, DC to 12 GHz, up to 430W, 28V, N PE71S6385

Pasternack Enterprises, Inc. • P.O. Box 16759, Irvine, CA 92623
Phone: (866) 727-8376 or (949) 261-1920 • **Fax:** (949) 261-7451
Sales@Pasternack.com • Techsupport@Pasternack.com

© 2017 Pasternack Enterprises All Rights Reserved

Transfer Electromechanical Relay Failsafe Switch,
DC to 12 GHz, up to 430W, 28V, N

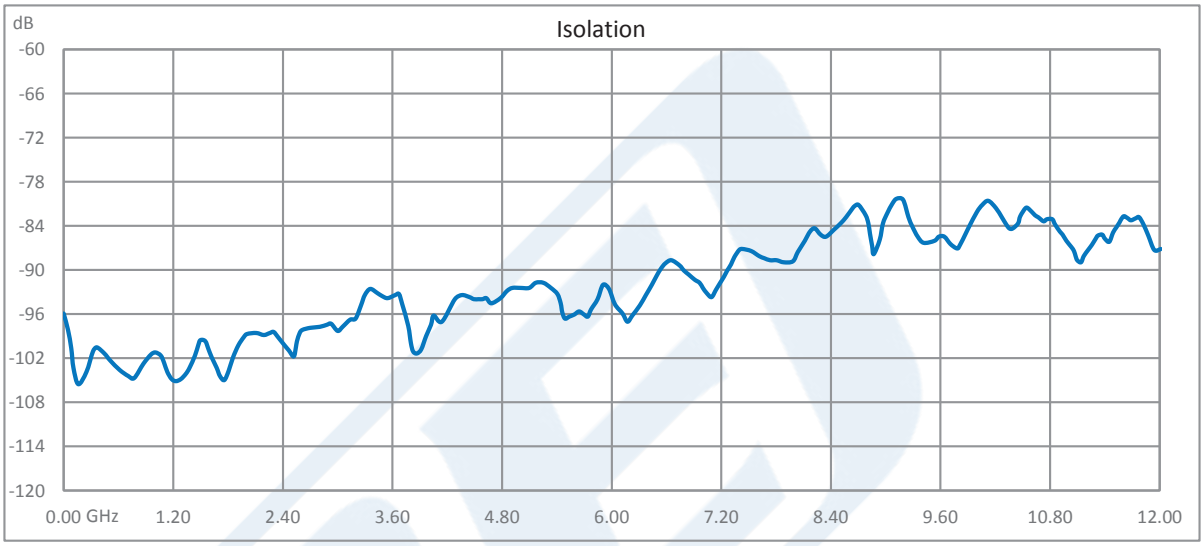

Click the following link (or enter part number in "SEARCH" on website) to obtain additional part information including price, inventory and certifications: Transfer Electromechanical Relay Failsafe Switch, DC to 12 GHz, up to 430W, 28V, N PE71S6385

Pasternack Enterprises, Inc. • P.O. Box 16759, Irvine, CA 92623
Phone: (866) 727-8376 or (949) 261-1920 • **Fax:** (949) 261-7451
Sales@Pasternack.com • Techsupport@Pasternack.com

© 2017 Pasternack Enterprises All Rights Reserved

Transfer Electromechanical Relay Failsafe Switch,
DC to 12 GHz, up to 430W, 28V, N

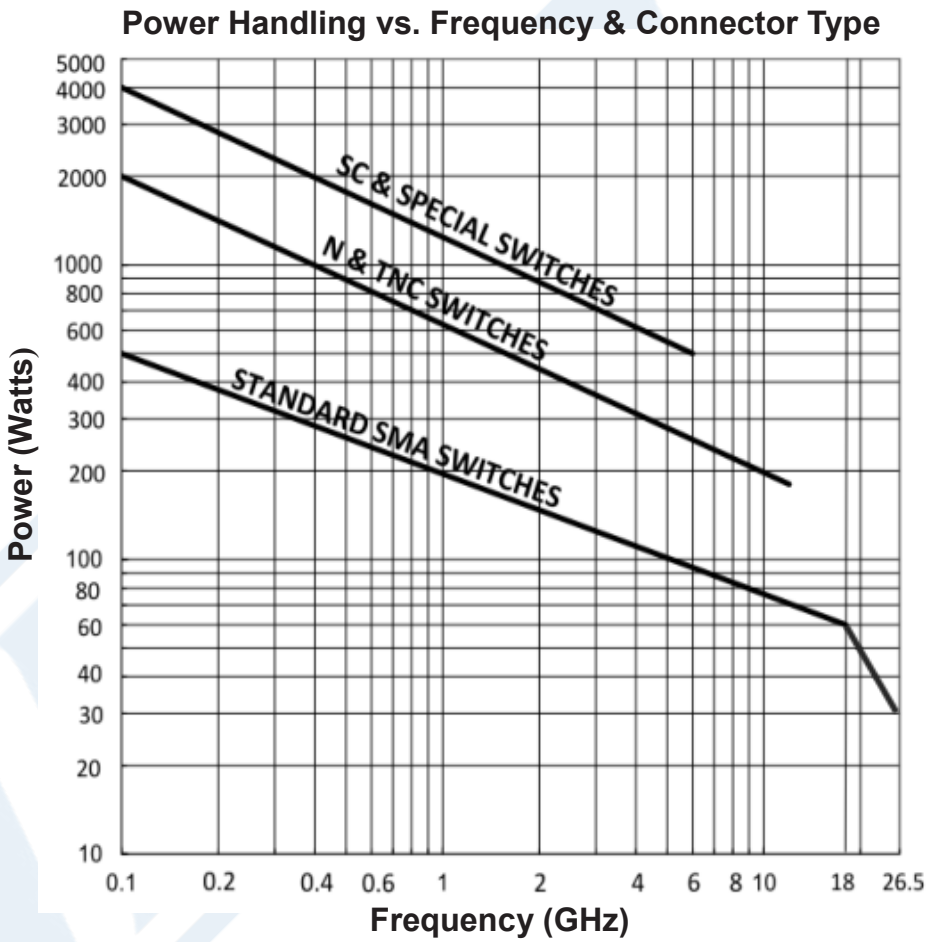

Environmental and Test Conditions:

- Ambient temperature of 25℃ or less
- Altitude: Sea Level
- Load VSWR: 1.20:1 max.
- Cold Switching

Click the following link (or enter part number in "SEARCH" on website) to obtain additional part information including price, inventory and certifications: Transfer Electromechanical Relay Failsafe Switch, DC to 12 GHz, up to 430W, 28V, N PE71S6385

Pasternack Enterprises, Inc. • P.O. Box 16759, Irvine, CA 92623
Phone: (866) 727-8376 or (949) 261-1920 • **Fax:** (949) 261-7451
Sales@Pasternack.com • Techsupport@Pasternack.com

© 2017 Pasternack Enterprises All Rights Reserved

Transfer Electromechanical Relay Failsafe Switch, DC to 12 GHz, up to 430W, 28V, N

Transfer Electromechanical Relay Failsafe Switch, DC to 12 GHz, up to 430W, 28V, N from Pasternack Enterprises has same day shipment for domestic and International orders. Our RF, microwave and millimeter wave products maintain a 99.4% availability and are part of the broadest selection in the industry.

Click the following link (or enter part number in "SEARCH" on website) to obtain additional part information including price, inventory and certifications: Transfer Electromechanical Relay Failsafe Switch, DC to 12 GHz, up to 430W, 28V, N PE71S6385

URL: https://www.pasternack.com/transfer-electromechanical-relay-failsafe-switch-12-ghz-200w-28v-n-pe71s6385-p.aspx

The information contained in this document is accurate to the best of our knowledge and representative of the part described herein. It may be necessary to make modifications to the part and/or the documentation of the part, in order to implement improvements. Pasternack reserves the right to make such changes as required. Unless otherwise stated, all specifications are nominal. Pasternack does not make any representation or warranty regarding the suitability of the part described herein for any particular purpose, and Pasternack does not assume any liability arising out of the use of any part or documentation.

Pasternack Enterprises, Inc. • P.O. Box 16759, Irvine, CA 92623
Phone: (866) 727-8376 or (949) 261-1920 • **Fax:** (949) 261-7451
Sales@Pasternack.com • Techsupport@Pasternack.com

© 2017 Pasternack Enterprises All Rights Reserved

PE71S6385 CAD Drawing

Transfer Electromechanical Relay Failsafe Switch, DC to 12 GHz, up to 430W, 28V, N

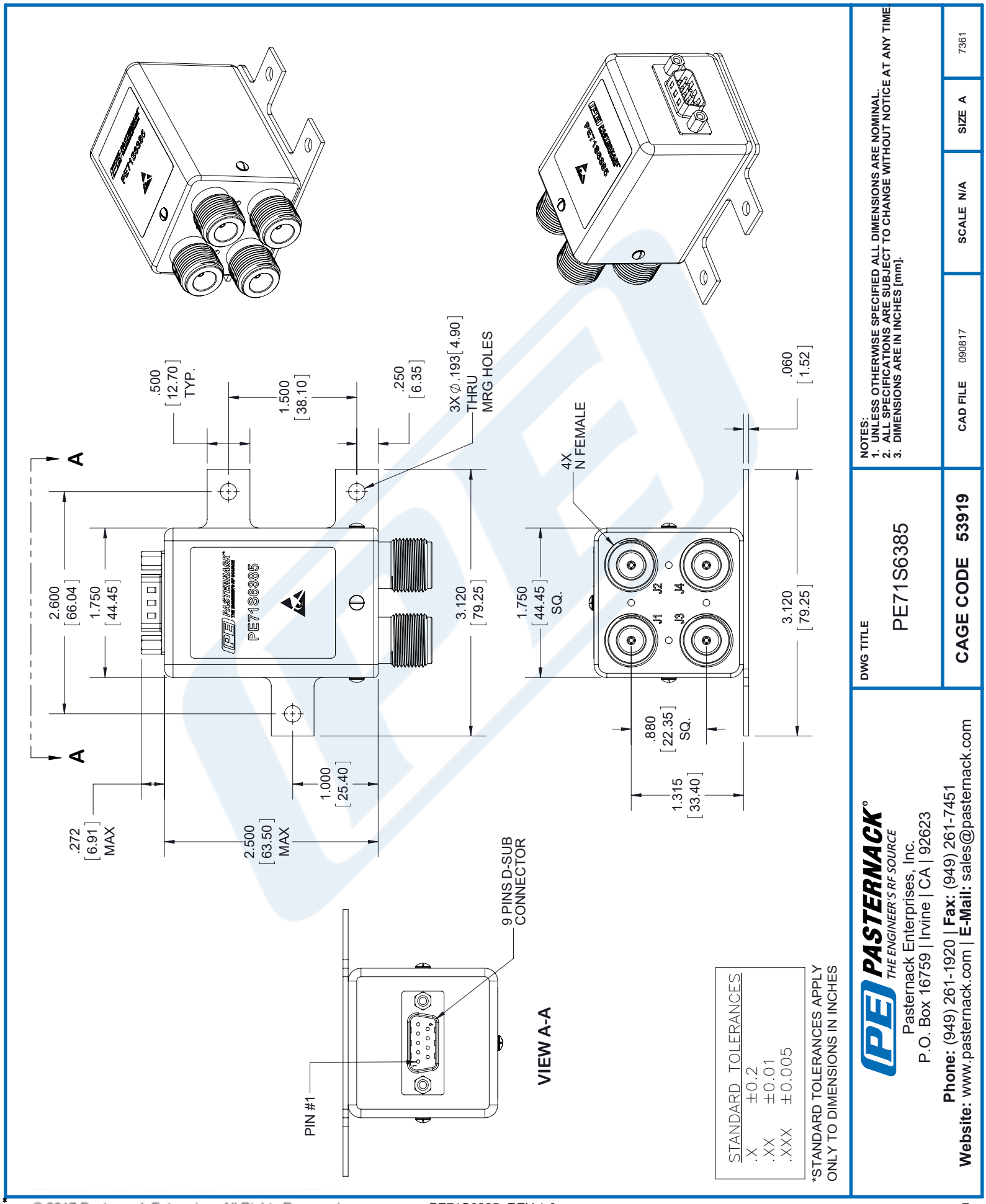

© 2017 Pasternack Enterprises All Rights Reserved

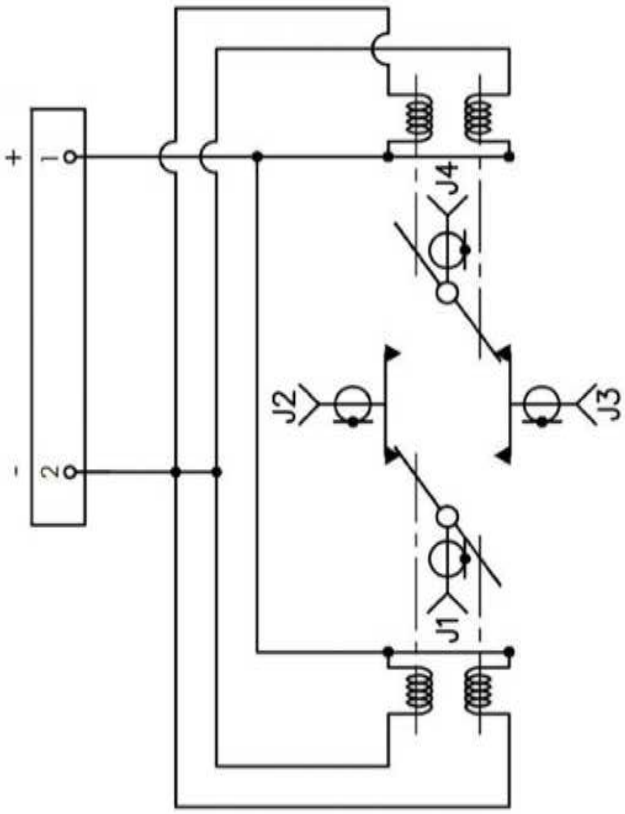

SCHEMATIC SHOWN IN FAILSAFE POSITION

VOLTAGE	RF PATH
DE-ENERGIZED	J1-J2, J3-J4
ENERGIZED	J1-J3, J2-J4

STANDARD TOLERANCES	
.X	±0.2
.XX	±0.01
.XXX	±0.005

*STANDARD TOLERANCES APPLY ONLY TO DIMENSIONS IN INCHES

NOTES:
1. UNLESS OTHERWISE SPECIFIED ALL DIMENSIONS ARE NOMINAL.
2. ALL SPECIFICATIONS ARE SUBJECT TO CHANGE WITHOUT NOTICE AT ANY TIME
3. DIMENSIONS ARE IN INCHES [mm].

DWG TITLE PE71S6385

CAD FILE 090817 | SCALE N/A | SIZE A | 7361

CAGE CODE 53919

PASTERNACK®
THE ENGINEER'S RF SOURCE
Pasternack Enterprises, Inc.
P.O. Box 16759 | Irvine | CA | 92623
Phone: (949) 261-1920 | **Fax:** (949) 261-7451
Website: www.pasternack.com | **E-Mail:** sales@pasternack.com

© 2017 Pasternack Enterprises All Rights Reserved