PASTERNACK
an INFINITE brand



Multi Band 47dBi GPS/GNSS Survey Antenna 1,164-1,615 MHz TNC Female Connector IP67

Antennas Technical Data Sheet PEANGPS1004

Features

- Multi Band
- IP67 Rated
- 1.164-1.3GHz and 1.525-1.615GHz
- Stable Phase Center
- Millimeter Level Accuracy
- TNC Female

Applications

- GPS L1/L2/L5
- GLONASS L1/L2/L3
- Galileo E1/E5a/E5b/E6
- BDS B1/B2/B3
- QZSS L1/L2/L5/L6
- SBAS L1/L5
- IRNSS L5
- Unmanned Vehicles/Vessels
- GIS Surveying
- Autonomous Vehicles

Description

The PEANGPS1004 is an active GPS/GNSS multi band L1/L2/L5 antenna with 47.5 dBi overall gain. This high precision antenna is IP67 rated, light weight and designed for Survey. The active Survey GPS/GNSS antenna is ideally suited for use in harsh operating environments where stability and reliability of GPS/GNSS signal is required.

This antenna operates in the 1.164-1.3GHz and 1.525-1.615GHz bands meeting GPS L1/L2/L5, GALILEO E1/E6/E5a/E5b and GLONASS L1/L2/L3 requirements. The PEANGPS1004 antenna has an integrated LNA with 2 dB noise figure and typical LNA gain of 40 dB.

The PEANGPS1004 GPS/GNSS antenna from Pasternack, with an axial ratio of 3 dB, can track visible satellites under extreme conditions, providing positioning solutions with accuracy for UAV navigation, autonomous tracking, or GIS surveying.

Configuration

Design	GPS/GNSS
Band Type	Multi
Polarization	RHCP
Connector Type	TNC Female

Electrical Specifications

Description	Minimum	Typical	Maximum	Units
Frequency Range	1,164		1,615	MHz
Output VSWR			2:1	
Impedance		50		Ohms
Gain		47.5		dBi
Noise Figure		2		dB
Operating DC Voltage	3.3		12	Volts
Current			45	mA
Axial Ratio		3		dB

Click the following link (or enter part number in “SEARCH” on website) to obtain additional part information including price, inventory and certifications: Multi Band 47dBi GPS/GNSS Survey Antenna 1,164-1,615 MHz TNC Female Connector IP67 PEANGPS1004

Pasternack Enterprises, Inc. • P.O. Box 16759, Irvine, CA 92623
Phone: (866) 727-8376 or (949) 261-1920 • **Fax:** (949) 261-7451
Sales@Pasternack.com • Techsupport@Pasternack.com

© 2020 Pasternack Enterprises All Rights Reserved

PASTERNACK
an INFINITE brand



Multi Band 47dBi GPS/GNSS Survey Antenna 1,164-1,615 MHz TNC Female Connector IP67

Antennas Technical Data Sheet PEANGPS1004

Specifications by Band

Description	Band 1	Band 2	Band 3	Band 4	Band 5	Units
Range	1.164 to 1.3	1.525 to 1.615				GHz
Gain	47.5	47.5				dBi

Mechanical Specifications

Mounting Application	BSW5/8” - 11 screw, 12-14mm
Size	
Overall Length	5.98 in [151.89 mm]
Width	5.98 in [151.89 mm]
Height	2.44 in [61.98 mm]
Weight	1.8 lbs [816.47 g]

Environmental Specifications

Temperature	
Operating Range	-40 to +85 deg C
Storage Range	-55 to +85 deg C
Humidity	95%
ESD Protection	67

Compliance Certifications (see product page for current document)

Plotted and Other Data

Notes:

Click the following link (or enter part number in “SEARCH” on website) to obtain additional part information including price, inventory and certifications: Multi Band 47dBi GPS/GNSS Survey Antenna 1,164-1,615 MHz TNC Female Connector IP67 PEANGPS1004

Pasternack Enterprises, Inc. • P.O. Box 16759, Irvine, CA 92623
Phone: (866) 727-8376 or (949) 261-1920 • **Fax:** (949) 261-7451
Sales@Pasternack.com • Techsupport@Pasternack.com

© 2020 Pasternack Enterprises All Rights Reserved

PASTERNACK
an INFINITE brand



Multi Band 47dBi GPS/GNSS Survey Antenna 1,164-1,615 MHz TNC Female Connector IP67

Antennas Technical Data Sheet PEANGPS1004

Multi Band 47dBi GPS/GNSS Survey Antenna 1,164-1,615 MHz TNC Female Connector IP67 from Pasternack Enterprises has same day shipment for domestic and International orders. Our RF, microwave and millimeter wave products maintain a 99.4% availability and are part of the broadest selection in the industry.

Click the following link (or enter part number in “SEARCH” on website) to obtain additional part information including price, inventory and certifications: Multi Band 47dBi GPS/GNSS Survey Antenna 1,164-1,615 MHz TNC Female Connector IP67 PEANGPS1004

URL: https://www.pasternack.com/47.5-dbi-band-gps-active-antenna-1164-1615-mhz-tnc-female-connector-peangps1004-p.aspx

The information contained in this document is accurate to the best of our knowledge and representative of the part described herein. It may be necessary to make modifications to the part and/or the documentation of the part, in order to implement improvements. Pasternack reserves the right to make such changes as required. Unless otherwise stated, all specifications are nominal. Pasternack does not make any representation or warranty regarding the suitability of the part described herein for any particular purpose, and Pasternack does not assume any liability arising out of the use of any part or documentation.

Pasternack Enterprises, Inc. • P.O. Box 16759, Irvine, CA 92623
Phone: (866) 727-8376 or (949) 261-1920 • **Fax:** (949) 261-7451
Sales@Pasternack.com • Techsupport@Pasternack.com

© 2020 Pasternack Enterprises All Rights Reserved

PEANGPS1004 CAD Drawing

Multi Band 47dBi GPS/GNSS Survey Antenna 1,164-1,615 MHz TNC Female Connector IP67

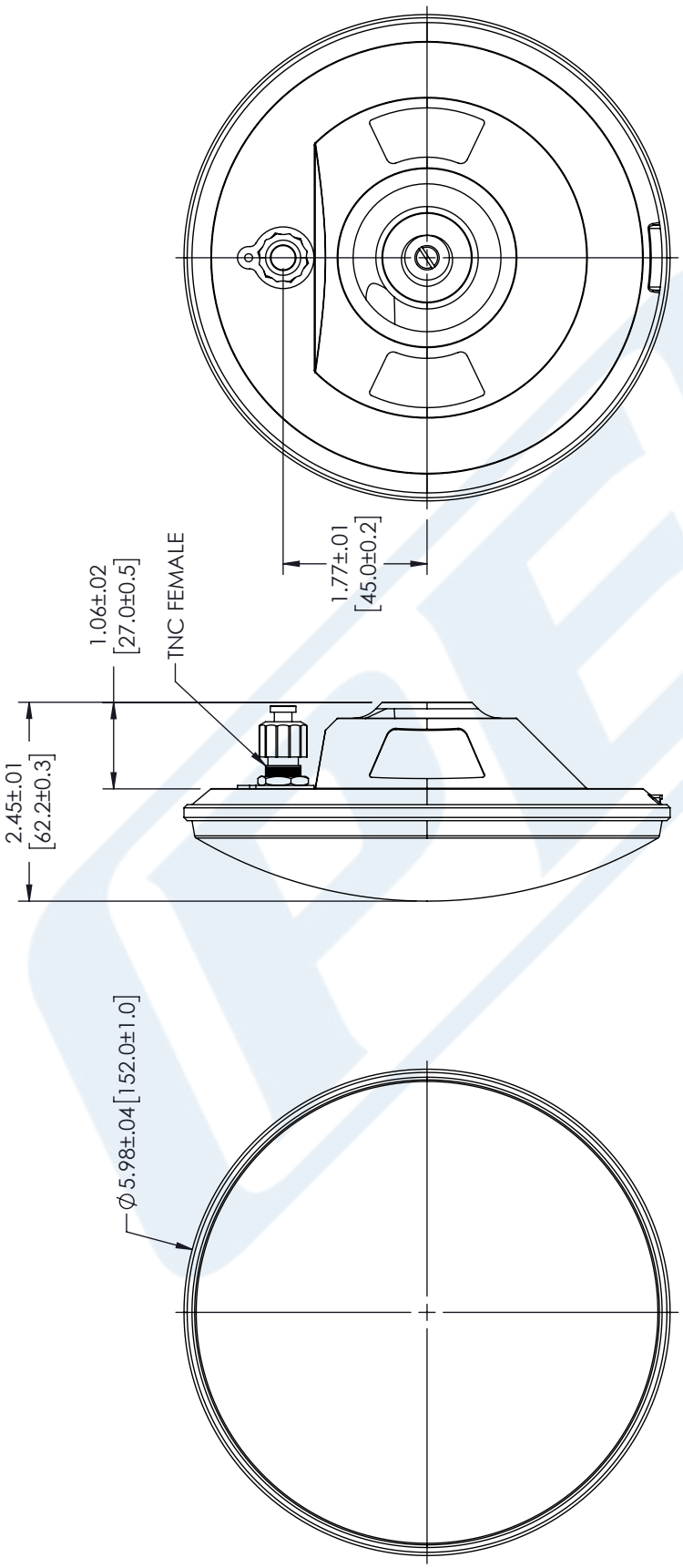

REVISIONS

REV.	DESCRIPTION	DATE	APPROVED
A	INITIAL RELEASE	5/9/2022	KHIETPAS

THIRD-ANGLE PROJECTION

THE INFORMATION AND DESIGN IN THIS DOCUMENT IS THE PROPERTY OF PASTERNACK CORPORATION ALL RIGHTS RESERVED.

SHEET 1 OF 1

SCALE N/A

REV A

PASTERNACK an INFINITE brand

Pasternack Enterprises, Inc.
P.O.Box 16759, Irvine, CA 92623.
Phone: 1.949.261.1920 | 1.866.727.8376
Fax: 1.949.261.7451
Website: www.pasternack.com
E-mail: sales@pasternack.com

SIZE	CAGE CODE	DRAWN BY	ITEM NO.
A	53919	HBAKKE	PEANGPS1004

UNLESS OTHERWISE SPECIFIED
LEADING DIMENSIONS ARE INCHES
DIMENSIONS IN [ ] ARE MILLIMETERS

TOLERANCES:

.X = ± .2 [5.08] | FRACTIONS ± 1/32
.XX = ± .02 [.51] | ANGLES ± 1°
.XXX = ± .005 [.13]

CABLE LENGTH (L) TOLERANCES:

L ≤ 12 [305] = +1 [25] / -0
12 [305] < L ≤ 60 [1524] = +2 [51] / -0
60 [1524] < L ≤ 120 [3048] = +4 [102] / -0
120 [3048] < L ≤ 300 [7620] = +6 [152] / -0
300 [7620] < L = +5%L / -0

ALL DIMENSIONS SHOWN ARE FOR REFERENCE ONLY.

THESE COMMODITIES, TECHNOLOGY OR SOFTWARE WERE EXPORTED FROM THE UNITED STATES IN ACCORDANCE WITH THE EXPORT ADMINISTRATION REGULATIONS. DIVERSION CONTRARY TO U.S. LAW PROHIBITED.

T-Rev.D

© 2020 Pasternack Enterprises All Rights Reserved