PASTERNACK
an INFINITE brand



WR-42 Waveguide Antenna, 18 GHz to 26.5 GHz Frequency Range, 15 dBi Gain, UG-597/U Flange

Waveguide Antennas Technical Data Sheet PEWAN042-15

Features

- WR-42 Rectangular Waveguide Interface
- 18 GHz to 26.5 GHz
- 15 dBi Nominal Gain
- UG-597/U Cover Flange
- K Band

Applications

- Antenna Measurements
- Wireless Communication
- Laboratory Use
- Microwave Radio Systems

Description

The PEWAN042-15 K Band standard gain horn antenna (also known as waveguide horn) from Pasternack has a nominal gain of 15 dBi. This WR-42 standard gain horn has a UG-597/U type flange. The Pasternack 15 dBi WR-42 horn antenna operates from 18 GHz to 26.5 GHz. The WR-42 PEWAN042-15 waveguide horn is Powder coated Aluminum for added protection and corrosion resistance. It is part of over 40,000 RF, microwave and millimeter wave components available from Pasternack. Waveguide standard gain horn antennas are used in a wide variety of applications due to their high power handling capability, low loss, high directivity, and near constant electrical performance. Pasternack's WR-42 standard gain horns are available in 10, 15 and 20 dBi models with pyramidal shape and rectangular input. Our WR-42 standard gain horn antennas can ship worldwide the same day as it is purchased as with our other available RF parts.

Configuration

Design	WR-42
Polarization	Linear

Electrical Specifications

Description	Minimum	Typical	Maximum	Units
Frequency Range	18		26.5	GHz
Nominal Gain		15		dB
Horizontal Half Power Beam Width		31		Degrees
Vertical Half Power Beam Width		32		Degrees
VSWR		1.3:1		

Mechanical Specifications

Size

Length	1.772 in [45.01 mm]
Width	1.258 in [31.95 mm]
Height	0.942 in [23.93 mm]
Weight	0.05 lbs [22.68 g]

Waveguide Interface

Waveguide Size	WR-42

Click the following link (or enter part number in "SEARCH" on website) to obtain additional part information including price, inventory and certifications: WR-42 Waveguide Antenna, 18 GHz to 26.5 GHz Frequency Range, 15 dBi Gain, UG-597/U Flange PEWAN042-15

Pasternack Enterprises, Inc. • P.O. Box 16759, Irvine, CA 92623
Phone: (866) 727-8376 or (949) 261-1920 • **Fax:** (949) 261-7451
Sales@Pasternack.com • Techsupport@Pasternack.com

© 2020 Pasternack Enterprises All Rights Reserved

PASTERNACK
an INFINITE brand



WR-42 Waveguide Antenna, 18 GHz to 26.5 GHz Frequency Range, 15 dBi Gain, UG-597/U Flange

Waveguide Antennas Technical Data Sheet PEWAN042-15

Flange Type	Square Cover
Flange Designation	UG-597/U
Body Material and Plating	Aluminum, Gray

Compliance Certifications (see product page for current document)

Plotted and Other Data

Typical Performance Data

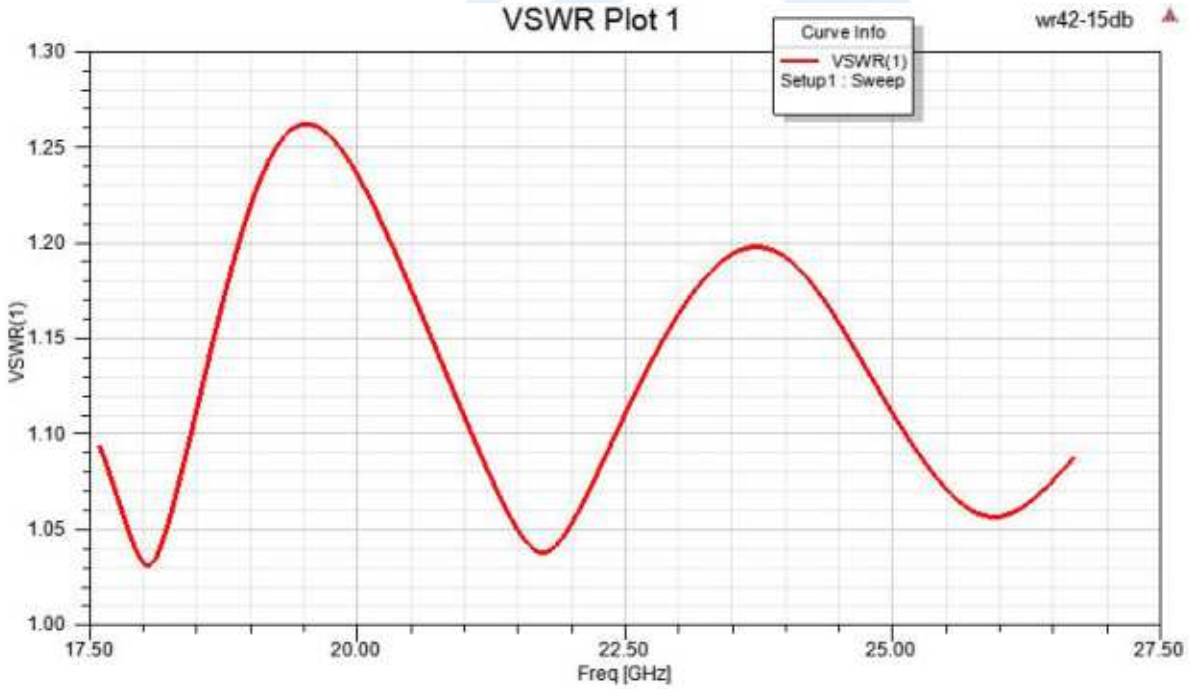

Click the following link (or enter part number in “SEARCH” on website) to obtain additional part information including price, inventory and certifications: WR-42 Waveguide Antenna, 18 GHz to 26.5 GHz Frequency Range, 15 dBi Gain, UG-597/U Flange PEWAN042-15

Pasternack Enterprises, Inc. • P.O. Box 16759, Irvine, CA 92623
Phone: (866) 727-8376 or (949) 261-1920 • **Fax:** (949) 261-7451
Sales@Pasternack.com • Techsupport@Pasternack.com

© 2020 Pasternack Enterprises All Rights Reserved

PASTERNACK
an INFINITE brand



WR-42 Waveguide Antenna, 18 GHz to 26.5 GHz Frequency Range, 15 dBi Gain, UG-597/U Flange

Waveguide Antennas Technical Data Sheet PEWAN042-15

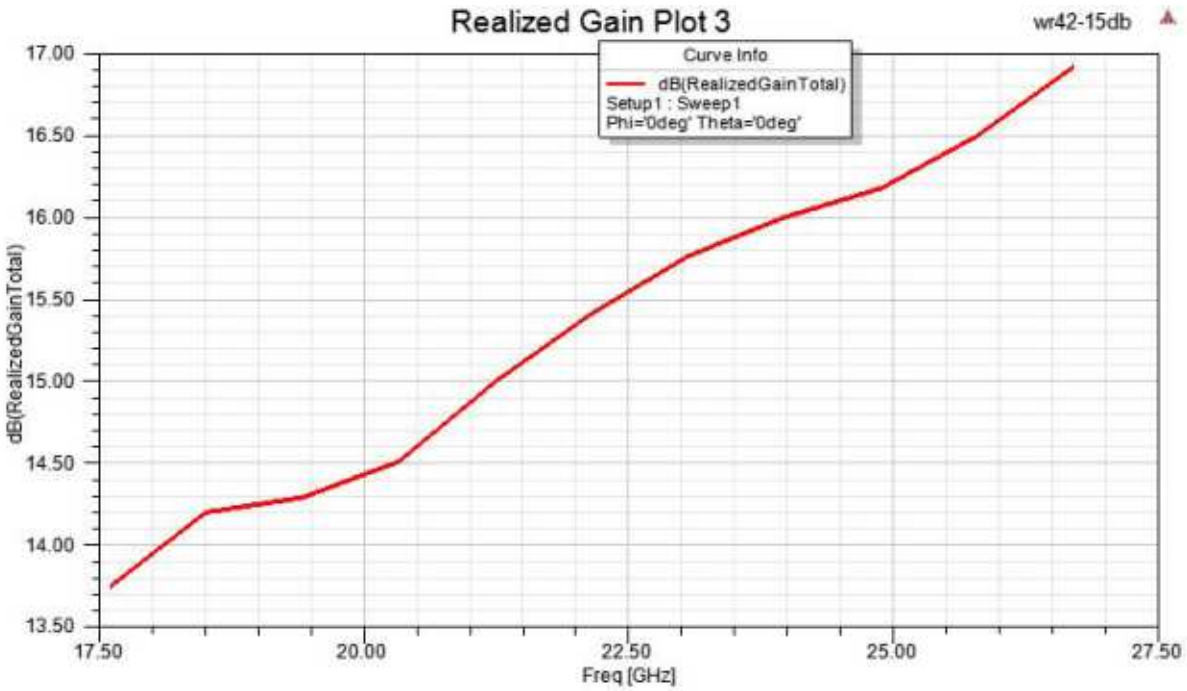

Click the following link (or enter part number in “SEARCH” on website) to obtain additional part information including price, inventory and certifications: WR-42 Waveguide Antenna, 18 GHz to 26.5 GHz Frequency Range, 15 dBi Gain, UG-597/U Flange PEWAN042-15

Pasternack Enterprises, Inc. • P.O. Box 16759, Irvine, CA 92623
Phone: (866) 727-8376 or (949) 261-1920 • **Fax:** (949) 261-7451
Sales@Pasternack.com • Techsupport@Pasternack.com

© 2020 Pasternack Enterprises All Rights Reserved

PASTERNACK
an INFINITE brand



WR-42 Waveguide Antenna, 18 GHz to 26.5 GHz Frequency Range, 15 dBi Gain, UG-597/U Flange

Waveguide Antennas Technical Data Sheet PEWAN042-15

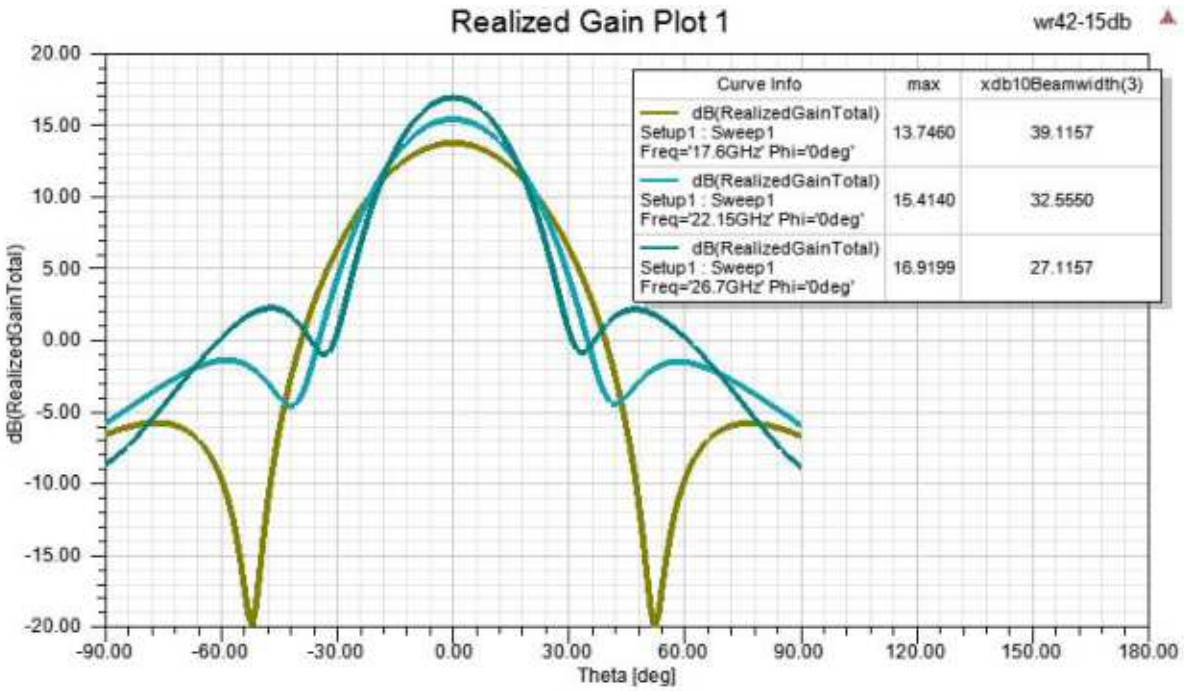

Click the following link (or enter part number in “SEARCH” on website) to obtain additional part information including price, inventory and certifications: WR-42 Waveguide Antenna, 18 GHz to 26.5 GHz Frequency Range, 15 dBi Gain, UG-597/U Flange PEWAN042-15

Pasternack Enterprises, Inc. • P.O. Box 16759, Irvine, CA 92623
Phone: (866) 727-8376 or (949) 261-1920 • **Fax:** (949) 261-7451
Sales@Pasternack.com • Techsupport@Pasternack.com

© 2020 Pasternack Enterprises All Rights Reserved

PASTERNACK
an INFINITE brand



WR-42 Waveguide Antenna, 18 GHz to 26.5 GHz Frequency Range, 15 dBi Gain, UG-597/U Flange

Waveguide Antennas Technical Data Sheet PEWAN042-15

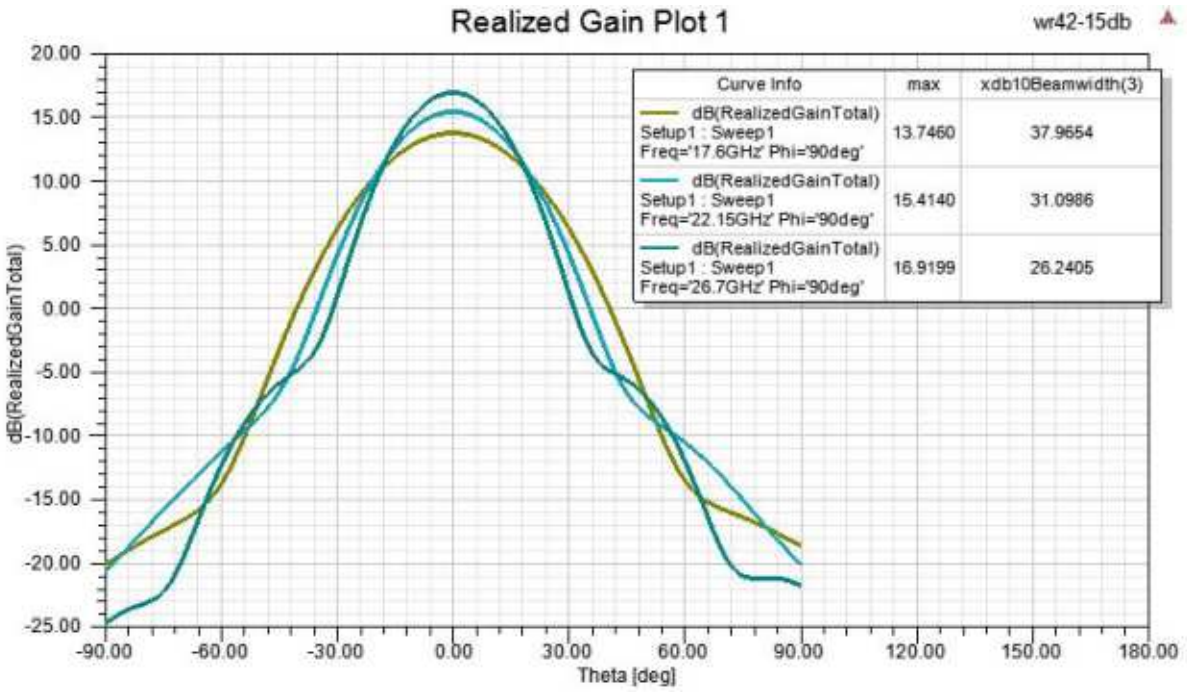

WR-42 Waveguide Antenna, 18 GHz to 26.5 GHz Frequency Range, 15 dBi Gain, UG-597/U Flange from Pasternack Enterprises has same day shipment for domestic and International orders. Our RF, microwave and millimeter wave products maintain a 99.4% availability and are part of the broadest selection in the industry.

Click the following link (or enter part number in “SEARCH” on website) to obtain additional part information including price, inventory and certifications: WR-42 Waveguide Antenna, 18 GHz to 26.5 GHz Frequency Range, 15 dBi Gain, UG-597/U Flange PEWAN042-15

URL: https://www.pasternack.com/wr-42-waveguide-gain-horn-antenna-15db-ug-597-square-flange-pewan042-15-p.aspx

The information contained in this document is accurate to the best of our knowledge and representative of the part described herein. It may be necessary to make modifications to the part and/or the documentation of the part, in order to implement improvements. Pasternack reserves the right to make such changes as required. Unless otherwise stated, all specifications are nominal. Pasternack does not make any representation or warranty regarding the suitability of the part described herein for any particular purpose, and Pasternack does not assume any liability arising out of the use of any part or documentation.

Pasternack Enterprises, Inc. • P.O. Box 16759, Irvine, CA 92623
Phone: (866) 727-8376 or (949) 261-1920 • **Fax:** (949) 261-7451
Sales@Pasternack.com • Techsupport@Pasternack.com

© 2020 Pasternack Enterprises All Rights Reserved

© 2020 Pasternack Enterprises All Rights Reserved

PEWAN042-15 CAD Drawing

WR-42 Waveguide Antenna, 18 GHz to 26.5 GHz Frequency Range, 15 dBi Gain, UG-597/U Flange

REVISIONS			
REV.	DESCRIPTION	DATE	APPROVED
A	INITIAL RELEASE	06/11/2021	KHIETPAS

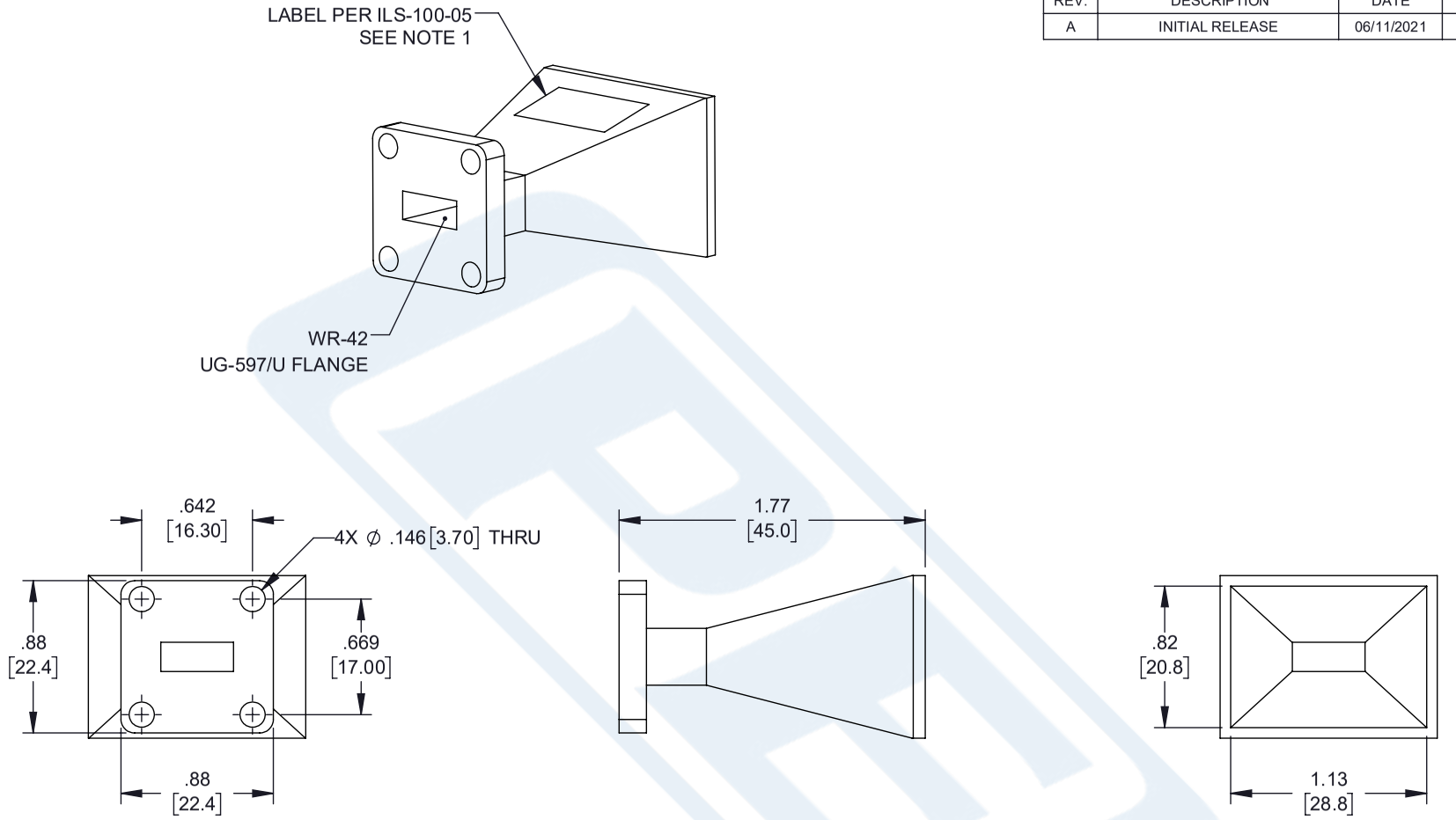

NOTES:

1. LABEL PER ILS-100-05 (FOR INTERNAL REFERENCE ONLY)
   LABEL LOCATION FOR REFERENCE ONLY

THESE COMMODITIES, TECHNOLOGY OR SOFTWARE WERE EXPORTED FROM THE UNITED STATES IN ACCORDANCE WITH THE EXPORT ADMINISTRATION REGULATIONS. DIVERSION CONTRARY TO U.S. LAW PROHIBITED.

UNLESS OTHERWISE SPECIFIED
LEADING DIMENSIONS ARE INCHES
DIMENSIONS IN [ ] ARE MILLIMETERS

TOLERANCES:

.X = ± .2 [5.08] | FRACTIONS ± 1/32
.XX = ± .02 [.51] | ANGLES ± 1°
.XXX = ± .005 [.13]

CABLE LENGTH (L) TOLERANCES:

L ≤ 12 [305] = +1 [25] / -0
12 [305] < L ≤ 60 [1524] = +2 [51] / -0
60 [1524] < L ≤ 120 [3048] = +4 [102] / -0
120 [3048] < L ≤ 300 [7620] = +6 [152] / -0
300 [7620] < L = +5%L / -0

ALL DIMENSIONS SHOWN ARE FOR REFERENCE ONLY.

PASTERNACK
an INFINITE brand

Pasternack Enterprises, Inc.
P.O.Box 16759, Irvine, CA 92623.
Phone: 1.949.261.1920 | 1.866.727.8376
Fax: 1.949.261.7451
Website: www.pasternack.com
E-mail: sales@pasternack.com

THIRD-ANGLE PROJECTION

THE INFORMATION AND DESIGN IN THIS DOCUMENT IS THE PROPERTY OF PASTERNACK CORPORATION ALL RIGHTS RESERVED.

SHEET 1 OF 1

SCALE N/A

SIZE	CAGE CODE	DRAWN BY	ITEM NO.	REV
A	53919	DZINN	PEWAN042-15	A