PASTERNACK
an INFINITE brand



WR-112 Standard Gain Horn with 10 dBi gain, N Female connector

Technical Data Sheet PEWAN112-10NF

Features

- 7.05 GHz to 10 GHz
- WR-112 Waveguide Band
- 10 dBi Nominal Gain
- N Female Connector

Applications

- Antenna Measurements
- Wireless Communication
- Laboratory Use
- Microwave Radio Systems
- Radome Testing
- Automotive Antenna Test
- Solutions
- Radar Cross Section
- Satellite Antenna Testing

Description

The PEWAN112-10NF standard gain horn antenna (also known as waveguide horn) from Pasternack is part of our comprehensive selection of waveguide antennas. This standard gain horn is mated with a WR-112 to N Female waveguide to coaxial adapter and operates from 7.05 GHz to 10 GHz.

Our PEWAN112-10NF standard gain horn antenna has a nominal gain of 10 dBi with a Horizontal and Vertical HPBW (Half Power Beam Width) of 52.1 dB and 51.6 dB respectively. Pasternack's N Female to WR-112 standard gain horns are available in 10, 15 and 20 dBi models with pyramidal shape and connectorized input.

Waveguide antennas, such as the PEWAN112-10NF are used in a wide variety of applications due to the high-power handling capability, low loss, high directivity, and near constant electrical performance. Our WR-112 waveguide antennas with N Female interface is part of over 40,000 RF, microwave and millimeter wave components from Pasternack available worldwide and Ship same day.

Configuration

Design	WR-112 Standard Gain Horn
Coaxial Interface	N Female

Electrical Specifications

Description	Minimum	Typical	Maximum	Units
Frequency Range	7.05		10	GHz
Waveguide Standard Gain Horn				
Gain		10		dBi
Horizontal Half Power Beam Width		52.1		Degrees
Vertical Half Power Beam Width		51.6		Degrees
Waveguide to Coaxial Adapter				
Input VSWR			1.3:1	

Click the following link (or enter part number in "SEARCH" on website) to obtain additional part information including price, inventory and certifications: WR-112 Standard Gain Horn with 10 dBi gain, N Female connector PEWAN112-10NF

Pasternack Enterprises, Inc. • P.O. Box 16759, Irvine, CA 92623
Phone: (866) 727-8376 or (949) 261-1920 • **Fax:** (949) 261-7451
Sales@Pasternack.com • Techsupport@Pasternack.com

© 2020 Pasternack Enterprises All Rights Reserved

PASTERNACK
an INFINITE brand

WR-112 Standard Gain Horn with 10 dBi gain, N Female connector



Technical Data Sheet PEWAN112-10NF

Mechanical Specifications

Size

Length	4.832 in [122.73 mm]
Width	1.705 in [43.31 mm]
Height	1.369 in [34.77 mm]
Weight	0.453 lbs [205.48 g]

RF Connector

Type	N Female

Waveguide Interface

Waveguide Size	WR-112

Environmental Specifications

Compliance Certifications (see product page for current document)

Plotted and Other Data

Notes:

Click the following link (or enter part number in “SEARCH” on website) to obtain additional part information including price, inventory and certifications: WR-112 Standard Gain Horn with 10 dBi gain, N Female connector PEWAN112-10NF

Pasternack Enterprises, Inc. • P.O. Box 16759, Irvine, CA 92623
Phone: (866) 727-8376 or (949) 261-1920 • **Fax:** (949) 261-7451
Sales@Pasternack.com • Techsupport@Pasternack.com

© 2020 Pasternack Enterprises All Rights Reserved

PASTERNACK
an INFINITE brand

WR-112 Standard Gain Horn with 10 dBi gain, N Female connector



Technical Data Sheet PEWAN112-10NF

Typical Performance Data

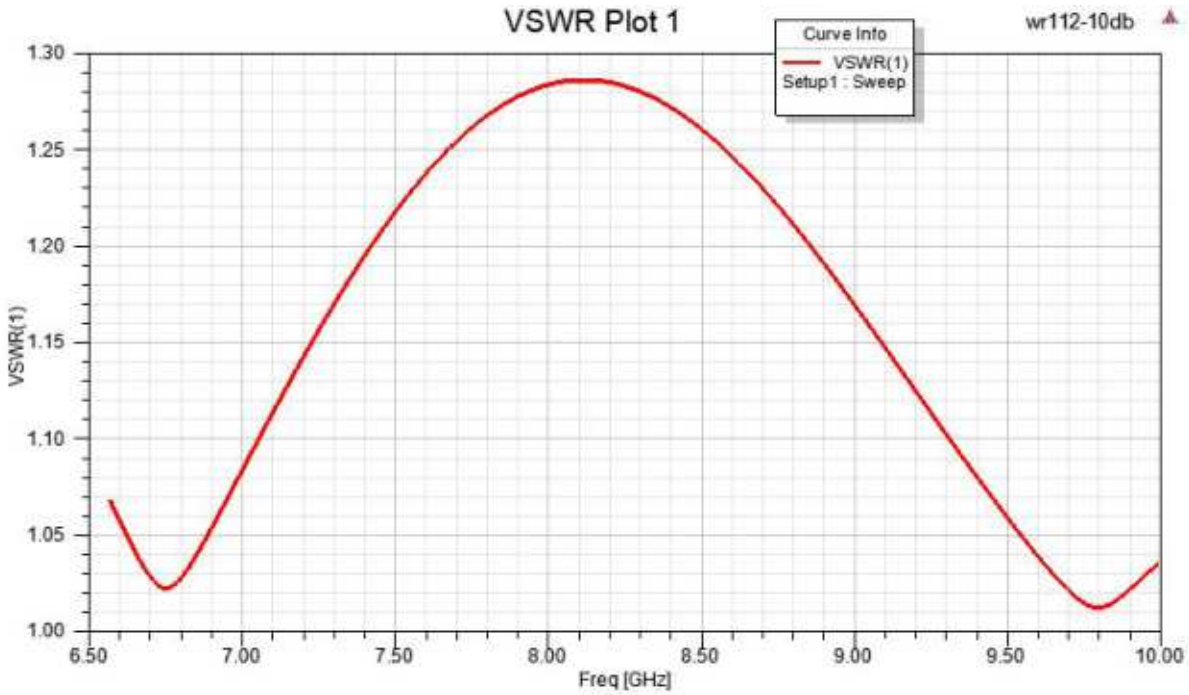

Click the following link (or enter part number in “SEARCH” on website) to obtain additional part information including price, inventory and certifications: WR-112 Standard Gain Horn with 10 dBi gain, N Female connector PEWAN112-10NF

Pasternack Enterprises, Inc. • P.O. Box 16759, Irvine, CA 92623
Phone: (866) 727-8376 or (949) 261-1920 • **Fax:** (949) 261-7451
Sales@Pasternack.com • Techsupport@Pasternack.com

© 2020 Pasternack Enterprises All Rights Reserved

PASTERNACK
an INFINITE brand

WR-112 Standard Gain Horn with 10 dBi gain, N Female connector



Technical Data Sheet PEWAN112-10NF

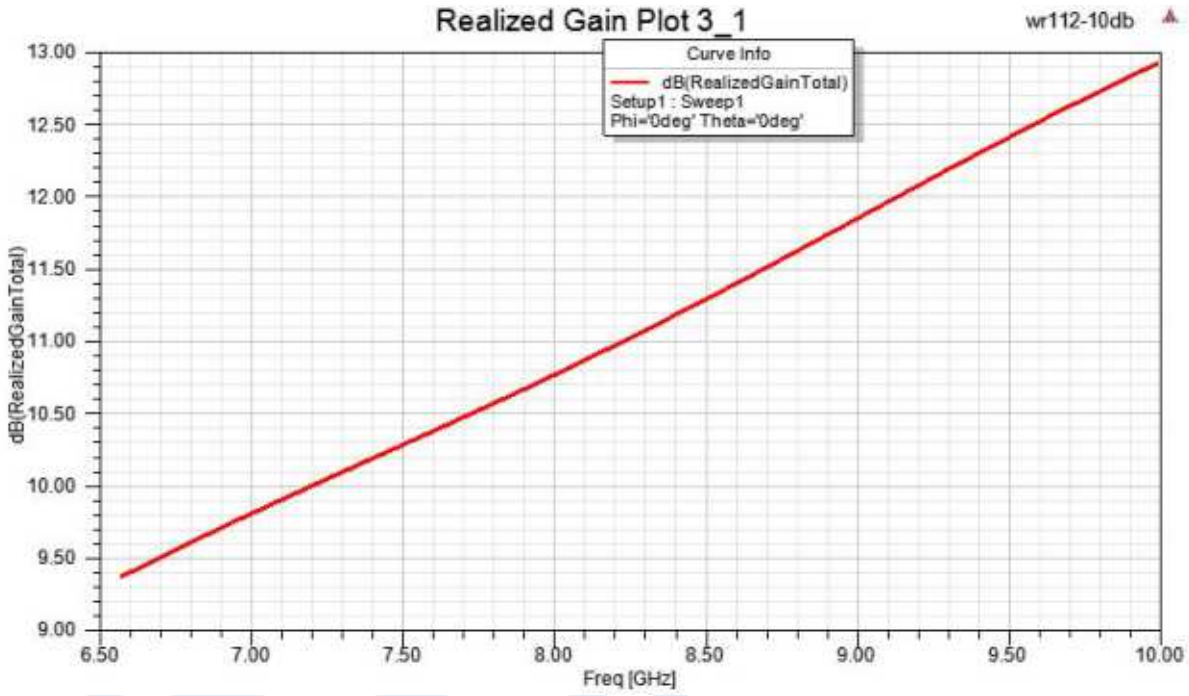

Click the following link (or enter part number in “SEARCH” on website) to obtain additional part information including price, inventory and certifications: WR-112 Standard Gain Horn with 10 dBi gain, N Female connector PEWAN112-10NF

Pasternack Enterprises, Inc. • P.O. Box 16759, Irvine, CA 92623
Phone: (866) 727-8376 or (949) 261-1920 • **Fax:** (949) 261-7451
Sales@Pasternack.com • Techsupport@Pasternack.com

© 2020 Pasternack Enterprises All Rights Reserved

PASTERNACK
an INFINITE brand



WR-112 Standard Gain Horn with 10 dBi gain, N Female connector

Technical Data Sheet PEWAN112-10NF

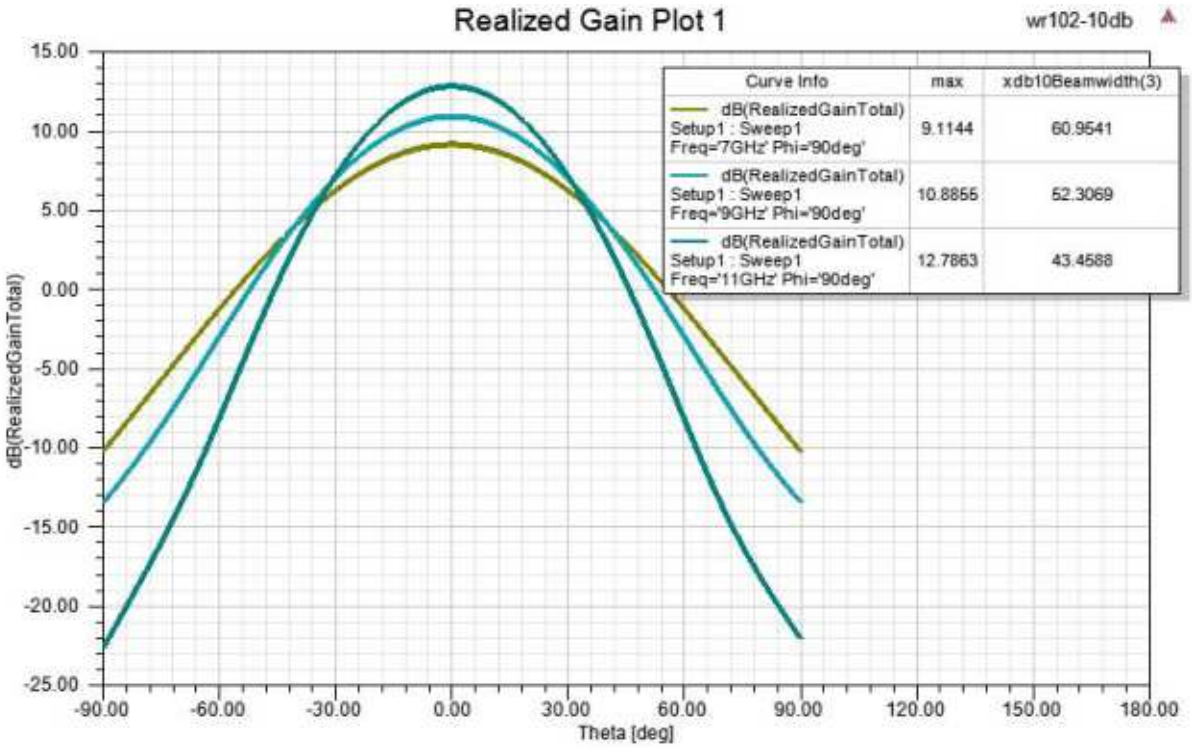

Click the following link (or enter part number in “SEARCH” on website) to obtain additional part information including price, inventory and certifications: WR-112 Standard Gain Horn with 10 dBi gain, N Female connector PEWAN112-10NF

Pasternack Enterprises, Inc. • P.O. Box 16759, Irvine, CA 92623
Phone: (866) 727-8376 or (949) 261-1920 • **Fax:** (949) 261-7451
Sales@Pasternack.com • Techsupport@Pasternack.com

© 2020 Pasternack Enterprises All Rights Reserved

PASTERNACK
an INFINITE brand



WR-112 Standard Gain Horn with 10 dBi gain, N Female connector

Technical Data Sheet PEWAN112-10NF

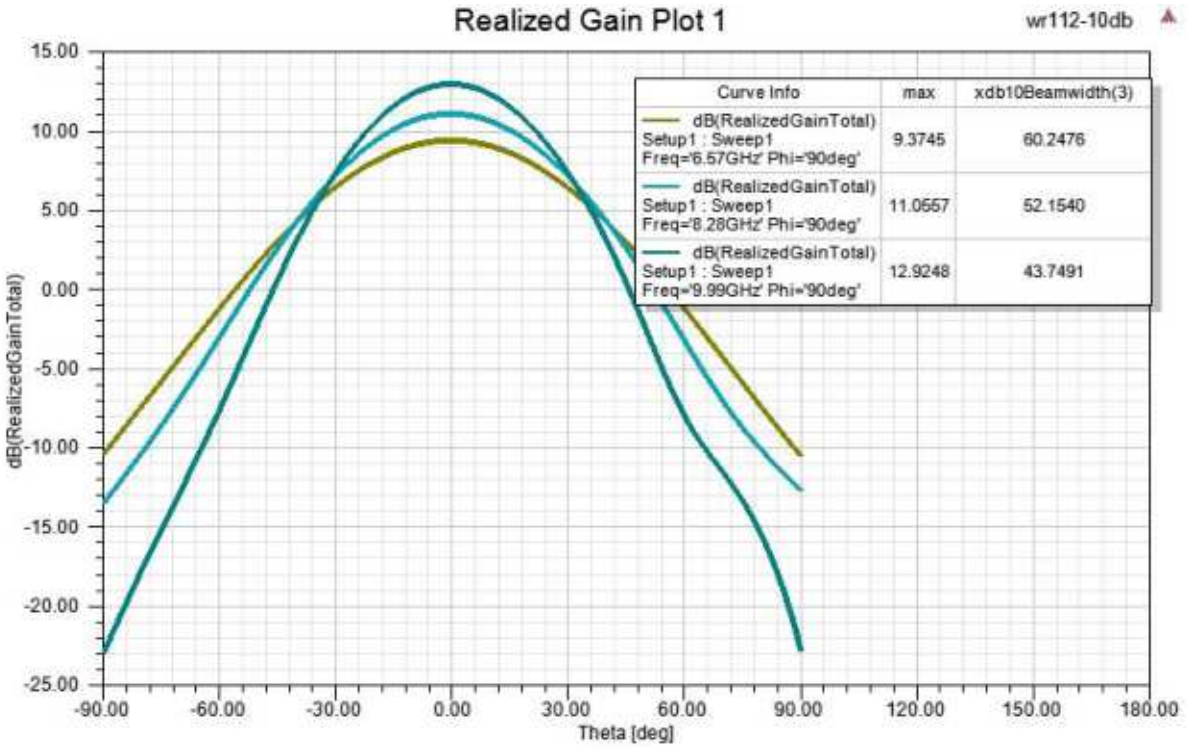

WR-112 Standard Gain Horn with 10 dBi gain, N Female connector from Pasternack Enterprises has same day shipment for domestic and International orders. Our RF, microwave and millimeter wave products maintain a 99.4% availability and are part of the broadest selection in the industry.

Click the following link (or enter part number in “SEARCH” on website) to obtain additional part information including price, inventory and certifications: WR-112 Standard Gain Horn with 10 dBi gain, N Female connector PEWAN112-10NF

URL:

The information contained in this document is accurate to the best of our knowledge and representative of the part described herein. It may be necessary to make modifications to the part and/or the documentation of the part, in order to implement improvements. Pasternack reserves the right to make such changes as required. Unless otherwise stated, all specifications are nominal. Pasternack does not make any representation or warranty regarding the suitability of the part described herein for any particular purpose, and Pasternack does not assume any liability arising out of the use of any part or documentation.

Pasternack Enterprises, Inc. • P.O. Box 16759, Irvine, CA 92623
Phone: (866) 727-8376 or (949) 261-1920 • **Fax:** (949) 261-7451
Sales@Pasternack.com • Techsupport@Pasternack.com

© 2020 Pasternack Enterprises All Rights Reserved

PEWAN112-10NF CAD Drawing

WR-112 Standard Gain Horn with 10 dBi gain, N Female connector

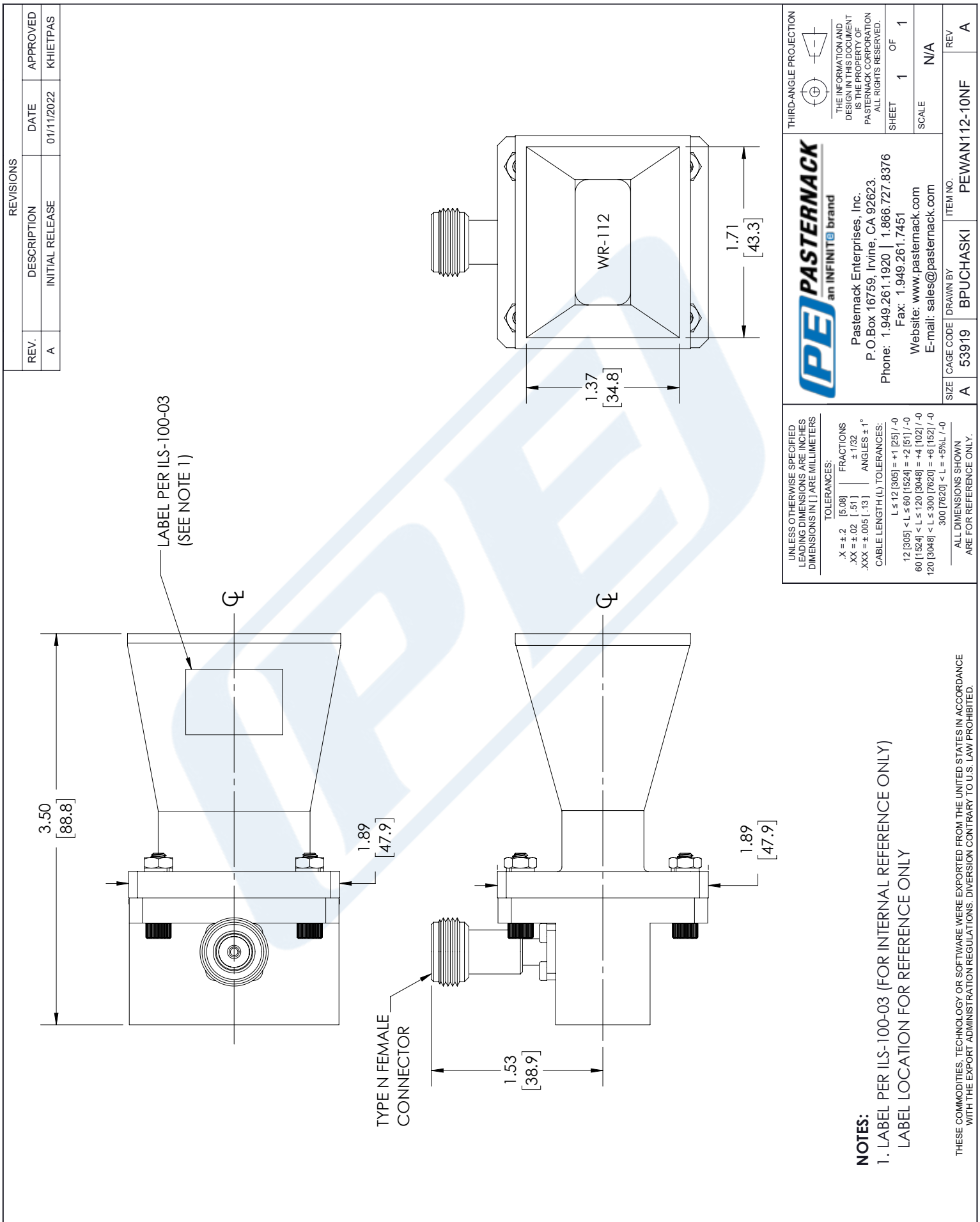

© 2020 Pasternack Enterprises All Rights Reserved