PASTERNACK
an INFINITE brand



WR-137 Standard Gain Horn with 10 dBi gain, SMA Female connector

Technical Data Sheet PEWAN137-10SF

Features

- 5.85 GHz to 8.2 GHz
- WR-137 Waveguide Band
- 10 dBi Nominal Gain
- SMA Female Connector

Applications

- Antenna Measurements
- Wireless Communication
- Laboratory Use
- Microwave Radio Systems
- Radome Testing
- Automotive Antenna Test Solutions
- Radar Cross Section
- Satellite Antenna Testing

Description

The PEWAN137-10SF standard gain horn antenna (also known as waveguide horn) from Pasternack is part of our comprehensive selection of waveguide antennas. This standard gain horn is mated with a WR-137 to SMA Female waveguide to coaxial adapter and operates from 5.85 GHz to 8.2 GHz.

Our PEWAN137-10SF standard gain horn antenna has a nominal gain of 10 dBi with a Horizontal and Vertical HPBW (Half Power Beam Width) of 52.1 dB and 51.6 dB respectively. Pasternack's SMA Female to WR-137 standard gain horns are available in 10, 15 and 20 dBi models with pyramidal shape and connectorized input.

Waveguide antennas, such as the PEWAN137-10SF are used in a wide variety of applications due to the high-power handling capability, low loss, high directivity, and near constant electrical performance. Our WR-137 waveguide antennas with SMA Female interface is part of over 40,000 RF, microwave and millimeter wave components from Pasternack available worldwide and Ship same day.

Configuration

Design	WR-137 Standard Gain Horn
Coaxial Interface	SMA Female

Electrical Specifications

Description	Minimum	Typical	Maximum	Units
Frequency Range	5.85		8.2	GHz
Waveguide Standard Gain Horn				
Gain		10		dBi
Horizontal Half Power Beam Width		52.1		Degrees
Vertical Half Power Beam Width		51.6		Degrees
Waveguide to Coaxial Adapter				
Input VSWR			1.3:1	

Click the following link (or enter part number in "SEARCH" on website) to obtain additional part information including price, inventory and certifications: WR-137 Standard Gain Horn with 10 dBi gain, SMA Female connector PEWAN137-10SF

Pasternack Enterprises, Inc. • P.O. Box 16759, Irvine, CA 92623
Phone: (866) 727-8376 or (949) 261-1920 • **Fax:** (949) 261-7451
Sales@Pasternack.com • Techsupport@Pasternack.com

© 2020 Pasternack Enterprises All Rights Reserved

PASTERNACK
an INFINITE brand

WR-137 Standard Gain Horn with 10 dBi gain, SMA Female connector



Technical Data Sheet PEWAN137-10SF

Mechanical Specifications

Size

Length	5.422 in [137.72 mm]
Width	2.085 in [52.96 mm]
Height	1.674 in [42.52 mm]
Weight	0.443 lbs [200.94 g]

RF Connector

Type	SMA Female

Waveguide Interface

Waveguide Size	WR-137

Environmental Specifications

Compliance Certifications (see product page for current document)

Plotted and Other Data

Notes:

Click the following link (or enter part number in “SEARCH” on website) to obtain additional part information including price, inventory and certifications: WR-137 Standard Gain Horn with 10 dBi gain, SMA Female connector PEWAN137-10SF

Pasternack Enterprises, Inc. • P.O. Box 16759, Irvine, CA 92623
Phone: (866) 727-8376 or (949) 261-1920 • **Fax:** (949) 261-7451
Sales@Pasternack.com • Techsupport@Pasternack.com

© 2020 Pasternack Enterprises All Rights Reserved

PASTERNACK
an INFINITE brand

WR-137 Standard Gain Horn with 10 dBi gain, SMA Female connector



Technical Data Sheet PEWAN137-10SF

Typical Performance Data

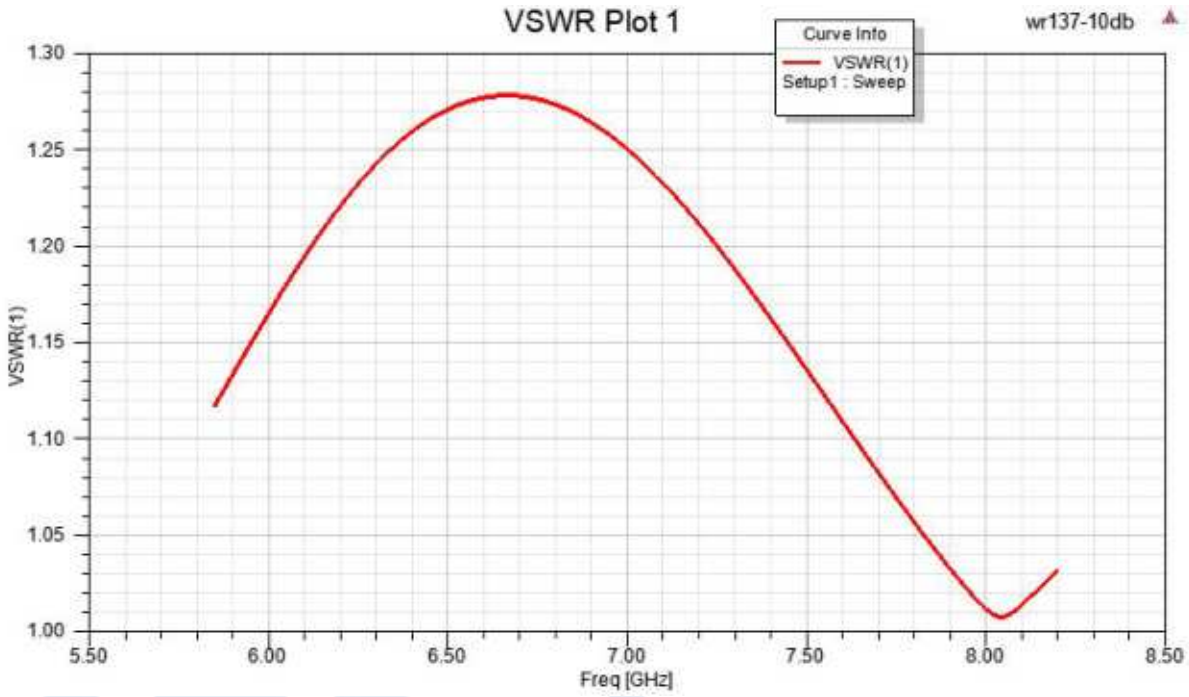

Click the following link (or enter part number in “SEARCH” on website) to obtain additional part information including price, inventory and certifications: WR-137 Standard Gain Horn with 10 dBi gain, SMA Female connector PEWAN137-10SF

Pasternack Enterprises, Inc. • P.O. Box 16759, Irvine, CA 92623
Phone: (866) 727-8376 or (949) 261-1920 • **Fax:** (949) 261-7451
Sales@Pasternack.com • Techsupport@Pasternack.com

© 2020 Pasternack Enterprises All Rights Reserved

PASTERNACK
an INFINITE brand



WR-137 Standard Gain Horn with 10 dBi gain, SMA Female connector

Technical Data Sheet PEWAN137-10SF

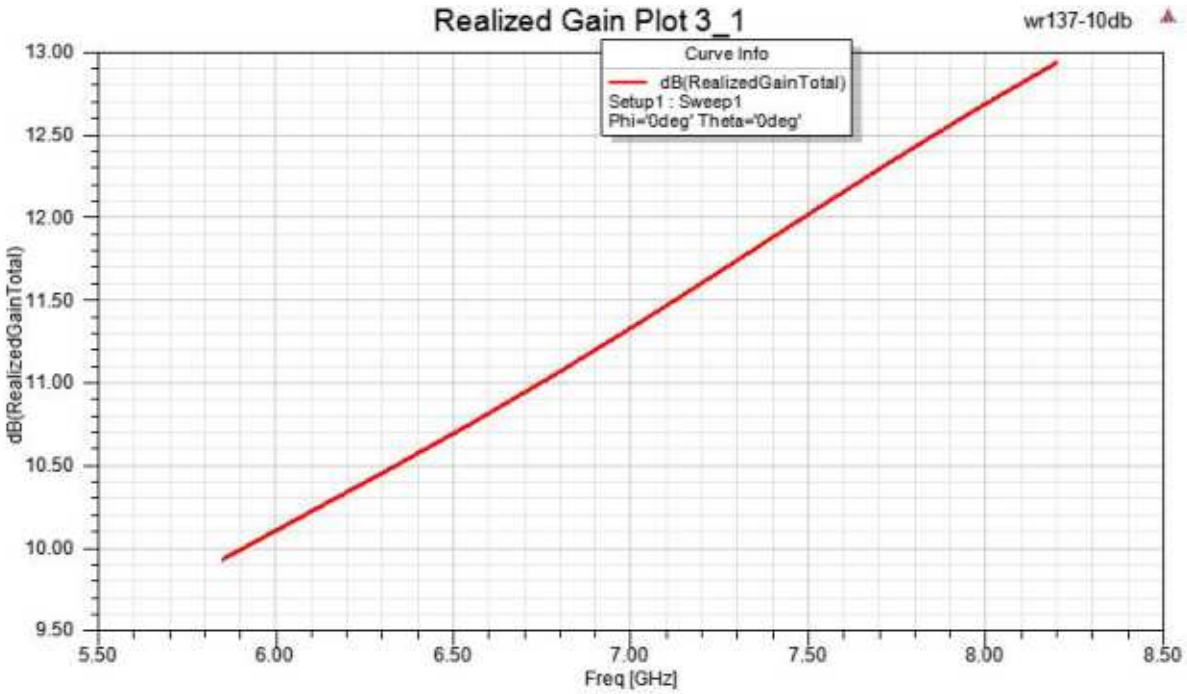

Click the following link (or enter part number in “SEARCH” on website) to obtain additional part information including price, inventory and certifications: WR-137 Standard Gain Horn with 10 dBi gain, SMA Female connector PEWAN137-10SF

Pasternack Enterprises, Inc. • P.O. Box 16759, Irvine, CA 92623
Phone: (866) 727-8376 or (949) 261-1920 • **Fax:** (949) 261-7451
Sales@Pasternack.com • Techsupport@Pasternack.com

© 2020 Pasternack Enterprises All Rights Reserved

PASTERNACK
an INFINITE brand



WR-137 Standard Gain Horn with 10 dBi gain, SMA Female connector

Technical Data Sheet PEWAN137-10SF

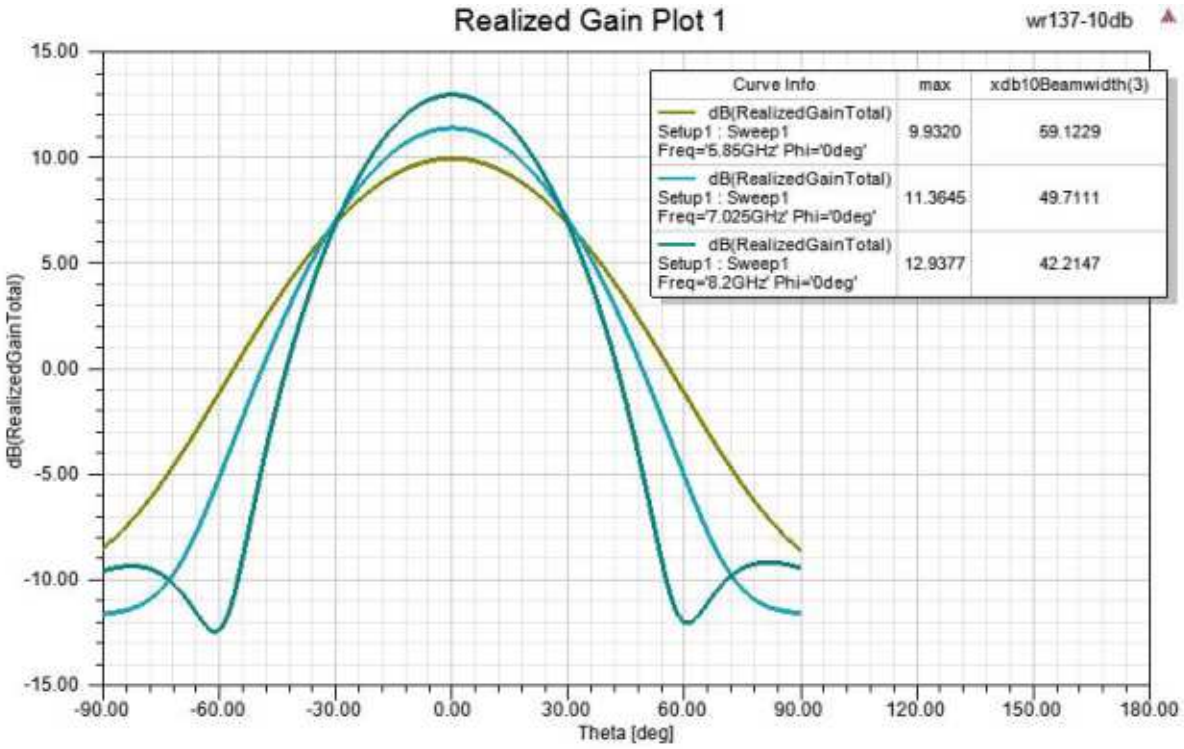

Click the following link (or enter part number in “SEARCH” on website) to obtain additional part information including price, inventory and certifications: WR-137 Standard Gain Horn with 10 dBi gain, SMA Female connector PEWAN137-10SF

Pasternack Enterprises, Inc. • P.O. Box 16759, Irvine, CA 92623
Phone: (866) 727-8376 or (949) 261-1920 • **Fax:** (949) 261-7451
Sales@Pasternack.com • Techsupport@Pasternack.com

© 2020 Pasternack Enterprises All Rights Reserved

PASTERNACK
an INFINITE brand



WR-137 Standard Gain Horn with 10 dBi gain, SMA Female connector

Technical Data Sheet PEWAN137-10SF

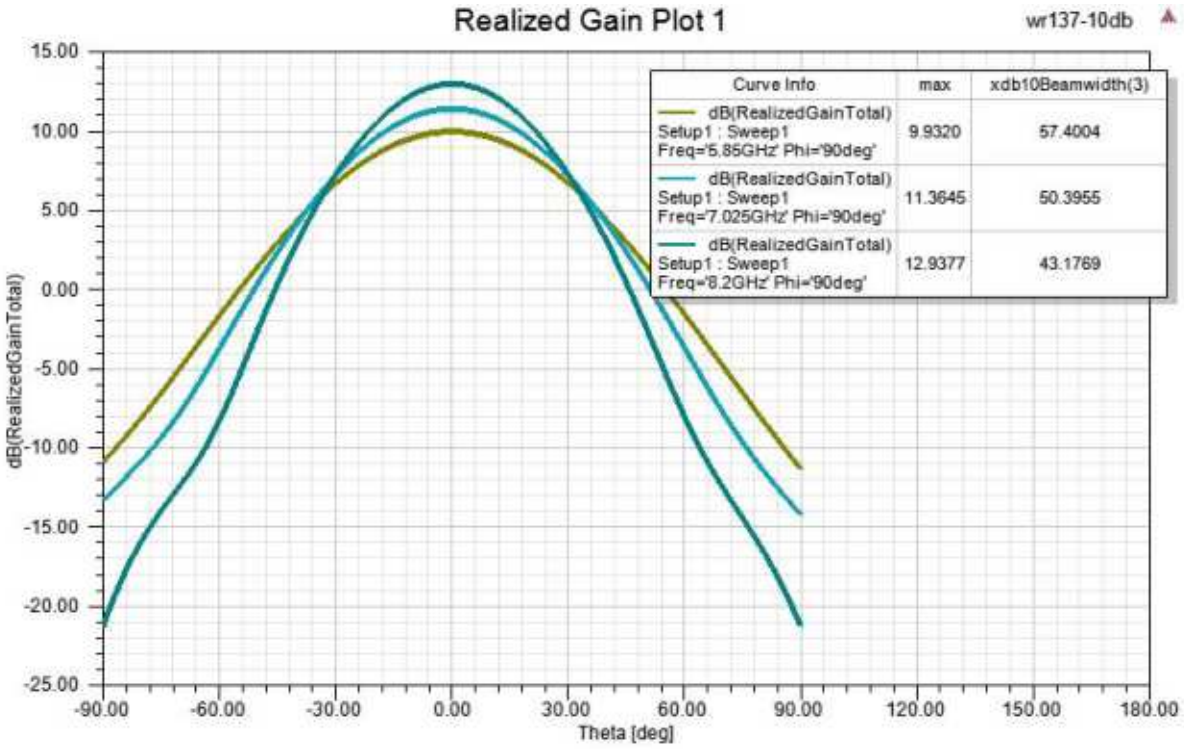

WR-137 Standard Gain Horn with 10 dBi gain, SMA Female connector from Pasternack Enterprises has same day shipment for domestic and International orders. Our RF, microwave and millimeter wave products maintain a 99.4% availability and are part of the broadest selection in the industry.

Click the following link (or enter part number in “SEARCH” on website) to obtain additional part information including price, inventory and certifications: WR-137 Standard Gain Horn with 10 dBi gain, SMA Female connector PEWAN137-10SF

URL:

The information contained in this document is accurate to the best of our knowledge and representative of the part described herein. It may be necessary to make modifications to the part and/or the documentation of the part, in order to implement improvements. Pasternack reserves the right to make such changes as required. Unless otherwise stated, all specifications are nominal. Pasternack does not make any representation or warranty regarding the suitability of the part described herein for any particular purpose, and Pasternack does not assume any liability arising out of the use of any part or documentation.

Pasternack Enterprises, Inc. • P.O. Box 16759, Irvine, CA 92623
Phone: (866) 727-8376 or (949) 261-1920 • **Fax:** (949) 261-7451
Sales@Pasternack.com • Techsupport@Pasternack.com

© 2020 Pasternack Enterprises All Rights Reserved

PEWAN137-10SF CAD Drawing

WR-137 Standard Gain Horn with 10 dBi gain, SMA Female connector

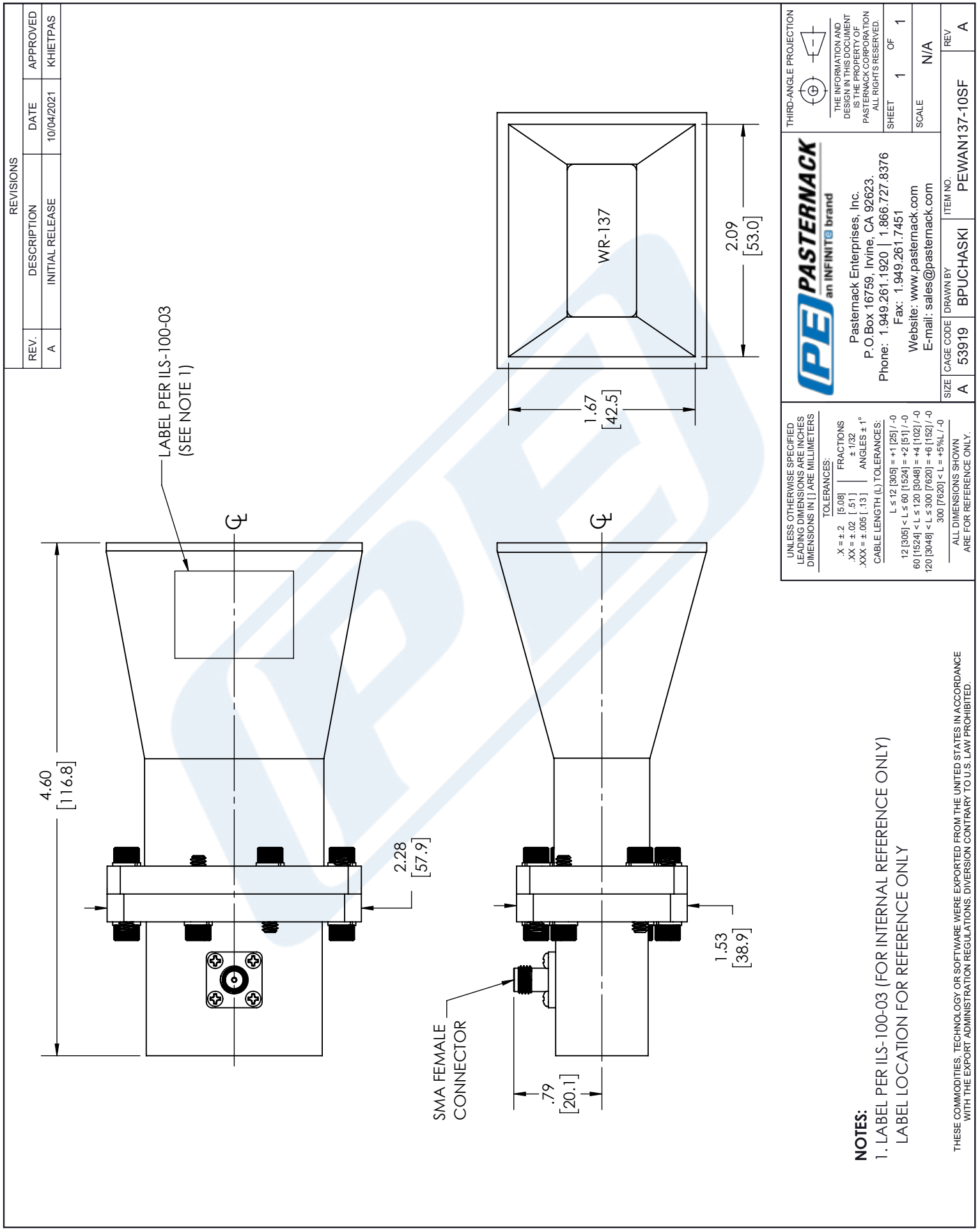

© 2020 Pasternack Enterprises All Rights Reserved