74LVC02A

Quad 2-input NOR gate

Rev. 12 — 8 February 2024 Product data sheet

1. General description

The 74LVC02A is a quad-input NOR gate. Inputs can be driven from either 3.3 V or 5 V devices. This feature allows the use of these devices as translators in mixed 3.3 V and 5 V applications.

Schmitt-trigger action at all inputs makes the circuit tolerant of slower input rise and fall times.

2. Features and benefits

- Overvoltage tolerant inputs to 5.5 V
- Wide supply voltage range from 1.2 V to 3.6 V
- CMOS low power consumption
- Direct interface with TTL levels
- Complies with JEDEC standard:
  - JESD8-7A (1.65 V to 1.95 V)
  - JESD8-5A (2.3 V to 2.7 V)
  - JESD8-C/JESD36 (2.7 V to 3.6 V)
- ESD protection:
  - HBM: ANSI/ESDA/JEDEC JS-001 class 2 exceeds 2000 V
  - CDM: ANSI/ESDA/JEDEC JS-002 class C3 exceeds 1000 V
- Specified from -40 °C to +85 °C and -40 °C to +125 °C

3. Ordering information

Table 1. Ordering information

Type number	Package			
	Temperature range	Name	Description	Version
74LVC02AD	-40 °C to +125 °C	SO14	plastic small outline package; 14 leads; body width 3.9 mm	SOT108-1
74LVC02APW	-40 °C to +125 °C	TSSOP14	plastic thin shrink small outline package; 14 leads; body width 4.4 mm	SOT402-1
74LVC02ABQ	-40 °C to +125 °C	DHVQFN14	plastic dual in-line compatible thermal enhanced very thin quad flat package; no leads; 14 terminals; body 2.5 × 3 × 0.85 mm	SOT762-1

4. Functional diagram

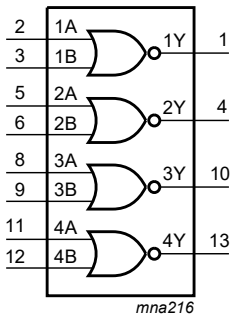

Fig. 1. Logic symbol

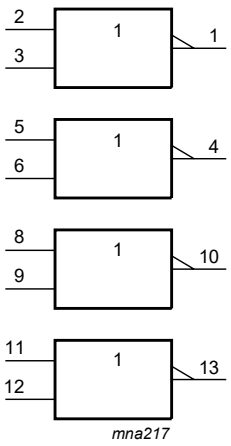

Fig. 2. IEC logic symbol

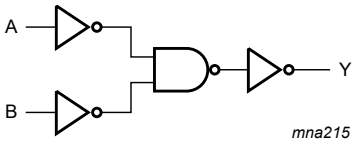

Fig. 3. Logic diagram (one gate)

5. Pinning information

5.1. Pinning

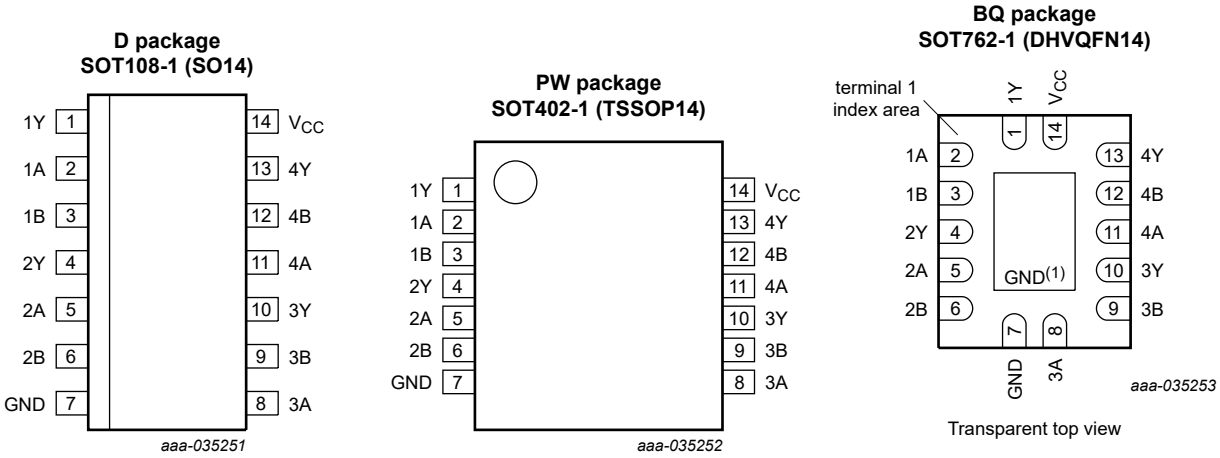

(1) This is not a ground pin. There is no electrical or mechanical requirement to solder the pad. In case soldered, the solder land should remain floating or connected to GND.

5.2. Pin description

Table 2. Pin description

Symbol	Pin	Description
1Y, 2Y, 3Y, 4Y	1, 4, 10, 13	data output
1A, 2A, 3A, 4A	2, 5, 8, 11	data input
1B, 2B, 3B, 4B	3, 6, 9,12	data input
GND	7	ground (0 V)
V_{CC}	14	supply voltage

All information provided in this document is subject to legal disclaimers.

© Nexperia B.V. 2024. All rights reserved

6. Functional description

Table 3. Function table

H = HIGH voltage level; L = LOW voltage level; X = don't care

Input nA	Input nB	Output nY
L	L	H
X	H	L
H	X	L

7. Limiting values

Table 4. Limiting values

In accordance with the Absolute Maximum Rating System (IEC 60134). Voltages are referenced to GND (ground = 0 V).

Symbol	Parameter	Conditions	Min	Max	Unit
V_{CC}	supply voltage		-0.5	+6.5	V
I_{IK}	input clamping current	$V_I < 0$ V	-50	-	mA
V_I	input voltage	[1]	-0.5	+6.5	V
I_{OK}	output clamping current	$V_O > V_{CC}$ or $V_O < 0$ V	-	±50	mA
V_O	output voltage	output in HIGH or LOW-state [2]	-0.5	V_{CC} + 0.5	V
I_O	output current	V_O = 0 V to V_{CC}	-	±50	mA
I_{CC}	supply current		-	100	mA
I_{GND}	ground current		-100	-	mA
P_{tot}	total power dissipation	T_{amb} = -40 °C to +125 °C [3]	-	500	mW
T_{stg}	storage temperature		-65	+150	°C

[1] The minimum input voltage ratings may be exceeded if the input current ratings are observed.
[2] The output voltage ratings may be exceeded if the output current ratings are observed.
[3] For SOT108-1 (SO14) package: P_{tot} derates linearly with 10.1 mW/K above 100 °C.
For SOT402-1 (TSSOP14) package: P_{tot} derates linearly with 7.3 mW/K above 81 °C.
For SOT762-1 (DHVQFN14) package: P_{tot} derates linearly with 9.6 mW/K above 98 °C.

8. Recommended operating conditions

Table 5. Recommended operating conditions

Symbol	Parameter	Conditions	Min	Typ	Max	Unit
V_{CC}	supply voltage		1.65	-	3.6	V
		functional	1.2	-	-	V
V_I	input voltage		0	-	5.5	V
V_O	output voltage	output HIGH or LOW state	0	-	V_{CC}	V
T_{amb}	ambient temperature		-40	-	+125	°C
$\Delta t/\Delta V$	input transition rise and fall rate	V_{CC} = 1.65 V to 2.7 V	0	-	20	ns/V
		V_{CC} = 2.7 V to 3.6 V	0	-	10	ns/V

All information provided in this document is subject to legal disclaimers.

© Nexperia B.V. 2024. All rights reserved

9. Static characteristics

Table 6. Static characteristics

At recommended operating conditions. Voltages are referenced to GND (ground = 0 V).

Symbol	Parameter	Conditions	-40 °C to +85 °C			-40 °C to +125 °C		Unit
			Min	Typ[1]	Max	Min	Max	
V_{IH}	HIGH-level input voltage	V_{CC} = 1.2 V	1.08	-	-	1.08	-	V
		V_{CC} = 1.65 V to 1.95 V	0.65 × V_{CC}	-	-	0.65 × V_{CC}	-	V
		V_{CC} = 2.3 V to 2.7 V	1.7	-	-	1.7	-	V
		V_{CC} = 2.7 V to 3.6 V	2.0	-	-	2.0	-	V
V_{IL}	LOW-level input voltage	V_{CC} = 1.2 V	-	-	0.12	-	0.12	V
		V_{CC} = 1.65 V to 1.95 V	-	-	0.35 × V_{CC}	-	0.35 × V_{CC}	V
		V_{CC} = 2.3 V to 2.7 V	-	-	0.7	-	0.7	V
		V_{CC} = 2.7 V to 3.6 V	-	-	0.8	-	0.8	V
V_{OH}	HIGH-level output voltage	V_I = V_{IH} or V_{IL}						
		I_O = -100 µA; V_{CC} = 1.65 V to 3.6 V	V_{CC} - 0.2	-	-	V_{CC} - 0.3	-	V
		I_O = -4 mA; V_{CC} = 1.65 V	1.2	-	-	1.05	-	V
		I_O = -8 mA; V_{CC} = 2.3 V	1.8	-	-	1.65	-	V
		I_O = -12 mA; V_{CC} = 2.7 V	2.2	-	-	2.05	-	V
		I_O = -18 mA; V_{CC} = 3.0 V	2.4	-	-	2.25	-	V
		I_O = -24 mA; V_{CC} = 3.0 V	2.2	-	-	2.0	-	V
V_{OL}	LOW-level output voltage	V_I = V_{IH} or V_{IL}						
		I_O = 100 µA; V_{CC} = 1.65 V to 3.6 V	-	-	0.2	-	0.3	V
		I_O = 4 mA; V_{CC} = 1.65 V	-	-	0.45	-	0.65	V
		I_O = 8 mA; V_{CC} = 2.3 V	-	-	0.6	-	0.8	V
		I_O = 12 mA; V_{CC} = 2.7 V	-	-	0.4	-	0.6	V
		I_O = 24 mA; V_{CC} = 3.0 V	-	-	0.55	-	0.8	V
I_I	input leakage current	V_{CC} = 3.6 V; V_I = 5.5 V or GND	-	±0.1	±5	-	±20	µA
I_{CC}	supply current	V_{CC} = 3.6 V; V_I = V_{CC} or GND; I_O = 0 A	-	0.1	10	-	40	µA
ΔI_{CC}	additional supply current	per input pin; V_{CC} = 2.7 V to 3.6 V; V_I = V_{CC} - 0.6 V; I_O = 0 A	-	5	500	-	5000	µA
C_I	input capacitance	V_{CC} = 0 V to 3.6 V; V_I = GND to V_{CC}	-	4.0	-	-	-	pF

[1] All typical values are measured at V_{CC} = 3.3 V (unless stated otherwise) and T_{amb} = 25 °C.

All information provided in this document is subject to legal disclaimers.

© Nexperia B.V. 2024. All rights reserved

10. Dynamic characteristics

Table 7. Dynamic characteristics

Voltages are referenced to GND (ground = 0 V). For test circuit see Fig. 5.

Symbol	Parameter	Conditions	-40 °C to +85 °C			-40 °C to +125 °C		Unit
			Min	Typ[1]	Max	Min	Max	
t_{pd}	propagation delay	nA, nB to nY; see Fig. 4 [2]						
		V_{CC} = 1.2 V	-	14	-	-	-	ns
		V_{CC} = 1.65 V to 1.95 V	0.5	4.0	8.6	0.5	10.1	ns
		V_{CC} = 2.3 V to 2.7 V	1.0	2.4	4.9	1.0	5.7	ns
		V_{CC} = 2.7 V	1.0	2.5	5.1	1.0	6.5	ns
		V_{CC} = 3.0 V to 3.6 V	1.0	2.2	4.4	1.0	5.5	ns
$t_{sk(o)}$	output skew time	V_{CC} = 3.0 V to 3.6 V [3]	-	-	1.0	-	1.5	ns
C_{PD}	power dissipation capacitance	per gate; V_I = GND to V_{CC} [4]						
		V_{CC} = 1.65 V to 1.95 V	-	2.5	-	-	-	pF
		V_{CC} = 2.3 V to 2.7 V	-	5.7	-	-	-	pF
		V_{CC} = 3.0 V to 3.6 V	-	8.5	-	-	-	pF

[1] Typical values are measured at T_{amb} = 25 °C and V_{CC} = 1.2 V, 1.8 V, 2.5 V, 2.7 V, and 3.3 V respectively.

[2] t_{pd} is the same as t_{PLH} and t_{PHL}.

[3] Skew between any two outputs of the same package switching in the same direction. This parameter is guaranteed by design.

[4] C_{PD} is used to determine the dynamic power dissipation (P_D in µW).

$P_D = C_{PD} \times V_{CC}^2 \times f_i \times N + \Sigma(C_L \times V_{CC}^2 \times f_o)$ where:

f_i = input frequency in MHz; f_o = output frequency in MHz

C_L = output load capacitance in pF

V_{CC} = supply voltage in Volts

N = number of inputs switching

$\Sigma(C_L \times V_{CC}^2 \times f_o)$ = sum of the outputs

All information provided in this document is subject to legal disclaimers.

© Nexperia B.V. 2024. All rights reserved

10.1. Waveforms and test circuit

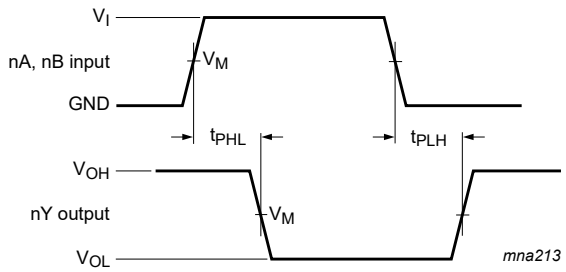

V_M = 1.5 V at V_{CC} ≥ 2.7 V;

V_M = 0.5 × V_{CC} at V_{CC} < 2.7 V;

V_{OL} and V_{OH} are typical output voltage levels that occur with the output load.

Fig. 4. The input (nA, nB) to output (nY) propagation delays

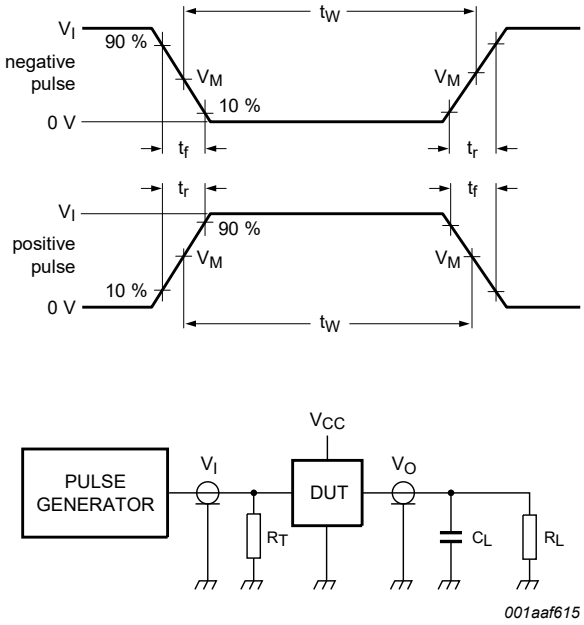

Test data is given in Table 8.

Definitions for test circuit:

R_L = Load resistance;

C_L = Load capacitance including jig and probe capacitance;

R_T = Termination resistance should be equal to output impedance Z_o of the pulse generator.

Fig. 5. Test circuit for measuring switching times

Table 8. Test data

Supply voltage	Input		Load	
	V_I	t_r, t_f	C_L	R_L
1.2 V	V_{CC}	≤ 2 ns	30 pF	1 kΩ
1.65 V to 1.95 V	V_{CC}	≤ 2 ns	30 pF	1 kΩ
2.3 V to 2.7 V	V_{CC}	≤ 2 ns	30 pF	500 Ω
2.7 V	2.7 V	≤ 2.5 ns	50 pF	500 Ω
3.0 V to 3.6 V	2.7 V	≤ 2.5 ns	50 pF	500 Ω

All information provided in this document is subject to legal disclaimers.

© Nexperia B.V. 2024. All rights reserved

11. Package outline

SO14: plastic small outline package; 14 leads; body width 3.9 mm **SOT108-1**

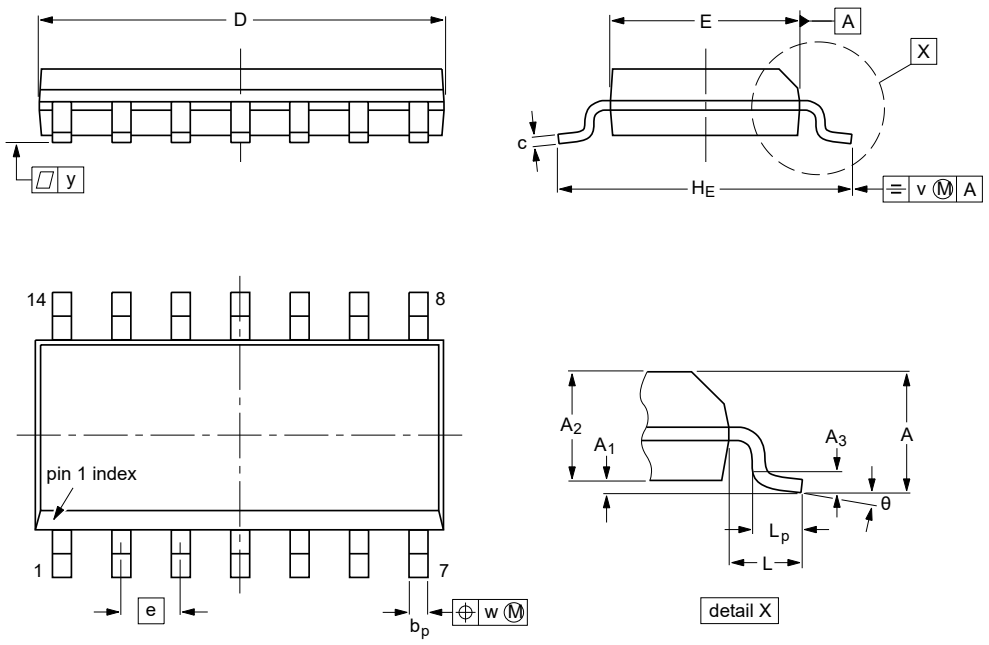

Dimensions (inch dimensions are derived from the original mm dimensions)

Unit		A	A_1	A_2	A_3	b_p	c	$D^{(1)}$	$E^{(1)}$	e	H_E	L	L_p	v	w	y	θ
mm	max	1.75	0.25			0.51	0.25	8.75	4.0		6.2		1.27				8°
	nom				0.25					1.27		1.05		0.2	0.25	0.1	
	min		0.10	1.25		0.31	0.10	8.55	3.8		5.8		0.4				0°
inches	max	0.069	0.010			0.020	0.010	0.344	0.16		0.244		0.05				8°
	nom				0.01					0.05		0.041		0.008	0.01	0.004	
	min		0.004	0.049		0.012	0.004	0.337	0.15		0.228		0.016				0°

Note
1. Plastic or metal protrusions of 0.15 mm (0.006 inch) maximum per side are not included.

sot108-1_po

Outline version	References				European projection	Issue date
	IEC	JEDEC	JEITA			
SOT108-1		MS-012				~~03-02-19~~ 23-10-27

Fig. 6. Package outline SOT108-1 (SO14)

All information provided in this document is subject to legal disclaimers.

© Nexperia B.V. 2024. All rights reserved

TSSOP14: plastic thin shrink small outline package; 14 leads; body width 4.4 mm **SOT402-1**

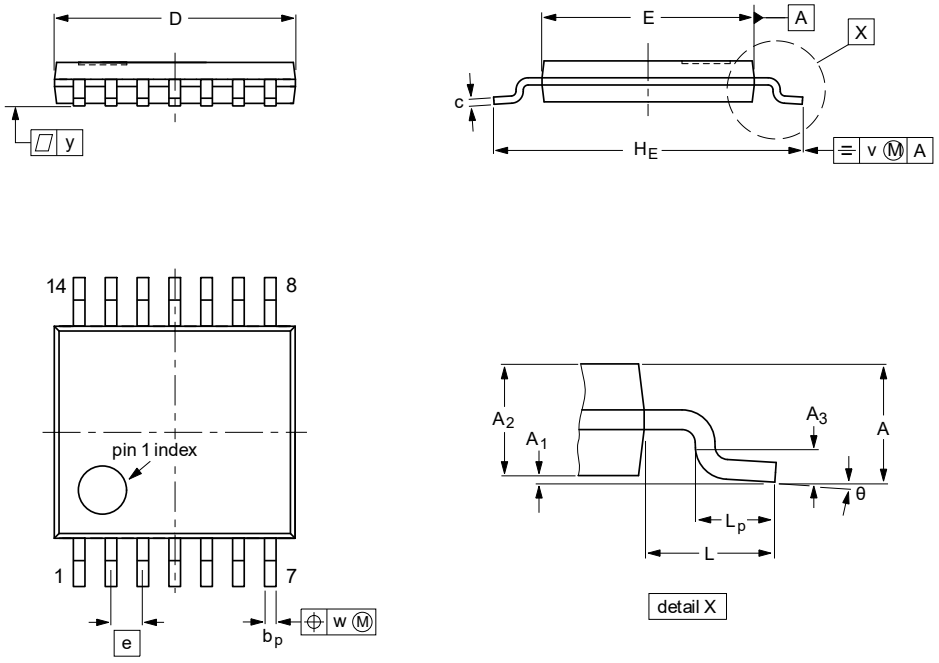

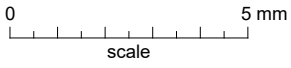

Dimensions (mm are the original dimensions)

Unit		A	A_1	A_2	A_3	b_p	c	$D^{(1)}$	$E^{(2)}$	e	H_E	L	L_p	v	w	y	θ
mm	max	1.20	0.15	1.05		0.30	0.2	5.1	4.5		6.6		0.75				8°
	nom				0.25					0.65		1		0.2	0.1	0.1	
	min		0.05	0.80		0.19	0.09	4.9	4.3		6.2		0.45				0°

Note
1. Plastic or metal protrusions of 0.15 mm maximum per side are not included.
2. Plastic interlead protrusions of 0.25 mm maximum per side are not included.

sot402-1_po

Outline version	References				European projection	Issue date
	IEC	JEDEC	JEITA			
SOT402-1		MO-153				~~03-02-18~~ 23-10-27

Fig. 7. Package outline SOT402-1 (TSSOP14)

All information provided in this document is subject to legal disclaimers.

© Nexperia B.V. 2024. All rights reserved

DHVQFN14: plastic dual in-line compatible thermal enhanced very thin quad flat package; no leads; 14 terminals; body 2.5 x 3 x 0.85 mm **SOT762-1**

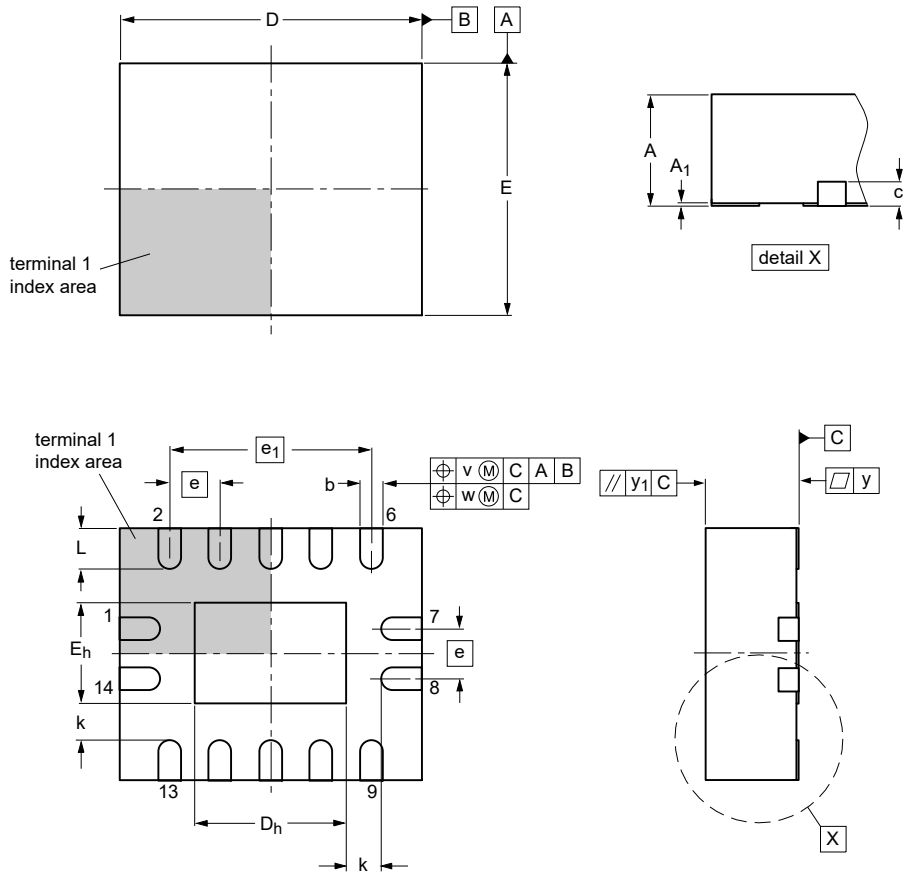

Dimensions (mm are the original dimensions)

Unit		$A^{(1)}$	A_1	b	c	$D^{(1)}$	D_h	$E^{(1)}$	E_h	e	e_1	k	L	v	w	y	y_1
	max	1	0.05	0.30		3.1	1.65	2.6	1.15				0.5				
mm	nom		0.02	0.25	0.2	3.0	1.50	2.5	1.00	0.5	2		0.4	0.1	0.05	0.05	0.1
	min		0.00	0.18		2.9	1.35	2.4	0.85			0.2	0.3				

Note

1. Plastic or metal protrusions of 0.075 mm maximum per side are not included.

sot762-1_po

Outline version	References				European projection	Issue date
	IEC	JEDEC	JEITA			
SOT762-1		MO-241				~~15-04-10~~ 15-05-05

Fig. 8. Package outline SOT762-1 (DHVQFN14)

All information provided in this document is subject to legal disclaimers.

© Nexperia B.V. 2024. All rights reserved

12. Abbreviations

Table 9. Abbreviations

Acronym	Description
CDM	Charged Device Model
CMOS	Complementary Metal Oxide Semiconductor
DUT	Device Under Test
ESD	ElectroStatic Discharge
HBM	Human Body Model
TTL	Transistor-Transistor Logic

13. Revision history

Table 10. Revision history

Document ID	Release date	Data sheet status	Change notice	Supersedes
74LVC02A v.12	20240208	Product data sheet	-	74LVC02A v.11
Modifications:	• Fig. 6, Fig. 7: Aligned SO and TSSOP package outline drawings to JEDEC MS-012 and MO-153.			
74LVC02A v.11	20230814	Product data sheet	-	74LVC02A v.10
Modifications:	• Section 2: ESD specification updated according to the latest JEDEC standard.			
74LVC02A v.10	20210917	Product data sheet	-	74LVC02A v.9
Modifications:	• Type number 74LVC02ADB (SOT337-1/SSOP14) removed. • Section 1 updated.			
74LVC02A v.9	20200824	Product data sheet	-	74LVC02A v.8
Modifications:	• The format of this data sheet has been redesigned to comply with the identity guidelines of Nexperia. • Legal texts have been adapted to the new company name where appropriate. • Table 4: Derating values for P_{tot} total power dissipation have been updated. • Package outline drawing of SOT762-1 (Fig. 8) updated.			
74LVC02A v.8	20111116	Product data sheet	-	74LVC02A v.7
Modifications:	• Legal pages updated. • Table 6, bodyrow ΔI_{CC}: condition V_{CC} changed.			
74LVC02A v.7	20111019	Product data sheet	-	74LVC02A v.6
74LVC02A v.6	20110809	Product data sheet	-	74LVC02A v.5
74LVC02A v.5	20040312	Product specification	-	74LVC02A v.4
74LVC02A v.4	20030501	Product specification	-	74LVC02A v.3
74LVC02A v.3	20020305	Product specification	-	74LVC02A v.2
74LVC02A v.2	19980428	Product specification	-	74LVC02A v.1
74LVC02A v.1	19970811	Product specification	-	-

All information provided in this document is subject to legal disclaimers.

© Nexperia B.V. 2024. All rights reserved

14. Legal information

Data sheet status

Document status [1][2]	Product status [3]	Definition
Objective [short] data sheet	Development	This document contains data from the objective specification for product development.
Preliminary [short] data sheet	Qualification	This document contains data from the preliminary specification.
Product [short] data sheet	Production	This document contains the product specification.

[1] Please consult the most recently issued document before initiating or completing a design.
[2] The term 'short data sheet' is explained in section "Definitions".
[3] The product status of device(s) described in this document may have changed since this document was published and may differ in case of multiple devices. The latest product status information is available on the internet at https://www.nexperia.com.

Definitions

Draft — The document is a draft version only. The content is still under internal review and subject to formal approval, which may result in modifications or additions. Nexperia does not give any representations or warranties as to the accuracy or completeness of information included herein and shall have no liability for the consequences of use of such information.

Short data sheet — A short data sheet is an extract from a full data sheet with the same product type number(s) and title. A short data sheet is intended for quick reference only and should not be relied upon to contain detailed and full information. For detailed and full information see the relevant full data sheet, which is available on request via the local Nexperia sales office. In case of any inconsistency or conflict with the short data sheet, the full data sheet shall prevail.

Product specification — The information and data provided in a Product data sheet shall define the specification of the product as agreed between Nexperia and its customer, unless Nexperia and customer have explicitly agreed otherwise in writing. In no event however, shall an agreement be valid in which the Nexperia product is deemed to offer functions and qualities beyond those described in the Product data sheet.

Disclaimers

Limited warranty and liability — Information in this document is believed to be accurate and reliable. However, Nexperia does not give any representations or warranties, expressed or implied, as to the accuracy or completeness of such information and shall have no liability for the consequences of use of such information. Nexperia takes no responsibility for the content in this document if provided by an information source outside of Nexperia.

In no event shall Nexperia be liable for any indirect, incidental, punitive, special or consequential damages (including - without limitation - lost profits, lost savings, business interruption, costs related to the removal or replacement of any products or rework charges) whether or not such damages are based on tort (including negligence), warranty, breach of contract or any other legal theory.

Notwithstanding any damages that customer might incur for any reason whatsoever, Nexperia's aggregate and cumulative liability towards customer for the products described herein shall be limited in accordance with the Terms and conditions of commercial sale of Nexperia.

Right to make changes — Nexperia reserves the right to make changes to information published in this document, including without limitation specifications and product descriptions, at any time and without notice. This document supersedes and replaces all information supplied prior to the publication hereof.

Suitability for use — Nexperia products are not designed, authorized or warranted to be suitable for use in life support, life-critical or safety-critical systems or equipment, nor in applications where failure or malfunction of an Nexperia product can reasonably be expected to result in personal injury, death or severe property or environmental damage. Nexperia and its suppliers accept no liability for inclusion and/or use of Nexperia products in such equipment or applications and therefore such inclusion and/or use is at the customer's own risk.

Quick reference data — The Quick reference data is an extract of the product data given in the Limiting values and Characteristics sections of this document, and as such is not complete, exhaustive or legally binding.

Applications — Applications that are described herein for any of these products are for illustrative purposes only. Nexperia makes no representation or warranty that such applications will be suitable for the specified use without further testing or modification.

Customers are responsible for the design and operation of their applications and products using Nexperia products, and Nexperia accepts no liability for any assistance with applications or customer product design. It is customer's sole responsibility to determine whether the Nexperia product is suitable and fit for the customer's applications and products planned, as well as for the planned application and use of customer's third party customer(s). Customers should provide appropriate design and operating safeguards to minimize the risks associated with their applications and products.

Nexperia does not accept any liability related to any default, damage, costs or problem which is based on any weakness or default in the customer's applications or products, or the application or use by customer's third party customer(s). Customer is responsible for doing all necessary testing for the customer's applications and products using Nexperia products in order to avoid a default of the applications and the products or of the application or use by customer's third party customer(s). Nexperia does not accept any liability in this respect.

Limiting values — Stress above one or more limiting values (as defined in the Absolute Maximum Ratings System of IEC 60134) will cause permanent damage to the device. Limiting values are stress ratings only and (proper) operation of the device at these or any other conditions above those given in the Recommended operating conditions section (if present) or the Characteristics sections of this document is not warranted. Constant or repeated exposure to limiting values will permanently and irreversibly affect the quality and reliability of the device.

Terms and conditions of commercial sale — Nexperia products are sold subject to the general terms and conditions of commercial sale, as published at http://www.nexperia.com/profile/terms, unless otherwise agreed in a valid written individual agreement. In case an individual agreement is concluded only the terms and conditions of the respective agreement shall apply. Nexperia hereby expressly objects to applying the customer's general terms and conditions with regard to the purchase of Nexperia products by customer.

No offer to sell or license — Nothing in this document may be interpreted or construed as an offer to sell products that is open for acceptance or the grant, conveyance or implication of any license under any copyrights, patents or other industrial or intellectual property rights.

Export control — This document as well as the item(s) described herein may be subject to export control regulations. Export might require a prior authorization from competent authorities.

Non-automotive qualified products — Unless this data sheet expressly states that this specific Nexperia product is automotive qualified, the product is not suitable for automotive use. It is neither qualified nor tested in accordance with automotive testing or application requirements. Nexperia accepts no liability for inclusion and/or use of non-automotive qualified products in automotive equipment or applications.

In the event that customer uses the product for design-in and use in automotive applications to automotive specifications and standards, customer (a) shall use the product without Nexperia's warranty of the product for such automotive applications, use and specifications, and (b) whenever customer uses the product for automotive applications beyond Nexperia's specifications such use shall be solely at customer's own risk, and (c) customer fully indemnifies Nexperia for any liability, damages or failed product claims resulting from customer design and use of the product for automotive applications beyond Nexperia's standard warranty and Nexperia's product specifications.

Translations — A non-English (translated) version of a document is for reference only. The English version shall prevail in case of any discrepancy between the translated and English versions.

Trademarks

Notice: All referenced brands, product names, service names and trademarks are the property of their respective owners.

All information provided in this document is subject to legal disclaimers.

© Nexperia B.V. 2024. All rights reserved

Contents

1. General description....1
2. Features and benefits....1
3. Ordering information....1
4. Functional diagram....2
5. Pinning information....2
5.1. Pinning....2
5.2. Pin description....2
6. Functional description....3
7. Limiting values....3
8. Recommended operating conditions....3
9. Static characteristics....4
10. Dynamic characteristics....5
10.1. Waveforms and test circuit....6
11. Package outline....7
12. Abbreviations....10
13. Revision history....10
14. Legal information....11

© **Nexperia B.V. 2024. All rights reserved**

For more information, please visit: http://www.nexperia.com
For sales office addresses, please send an email to: salesaddresses@nexperia.com
Date of release: 8 February 2024