PRODUCT SPECIFICATION

DDR3 DIMM, 1.00mm PITCH, 240 CKTS, VERTICAL PRESSFIT, LOWLLCR

1.0 SCOPE

This Product Specification covers the 1.00 mm centerline gold plated DDR3 DIMM connector with vertical compliant termination to mate with 1.27 ± 0.10 mm thick memory modules.

2.0 PRODUCT DESCRIPTION

2.1 PRODUCT NAME AND SERIES NUMBER (S)

Series Number

78443

Product Descriptions

DDR3 DIMM, 1.00MM PITCH, 240 CKTS, VERT PRESSFIT, LOWLLCR

2.2 DIMENSIONS, MATERIALS, PLATINGS AND MARKINGS

See the appropriate Sales Drawings for information on dimensions, materials, plating and markings, recommended module outlines and footprint Specifications.

2.3 SAFETY AGENCY APPROVALS

UL File : TBA
CSA File : TBA

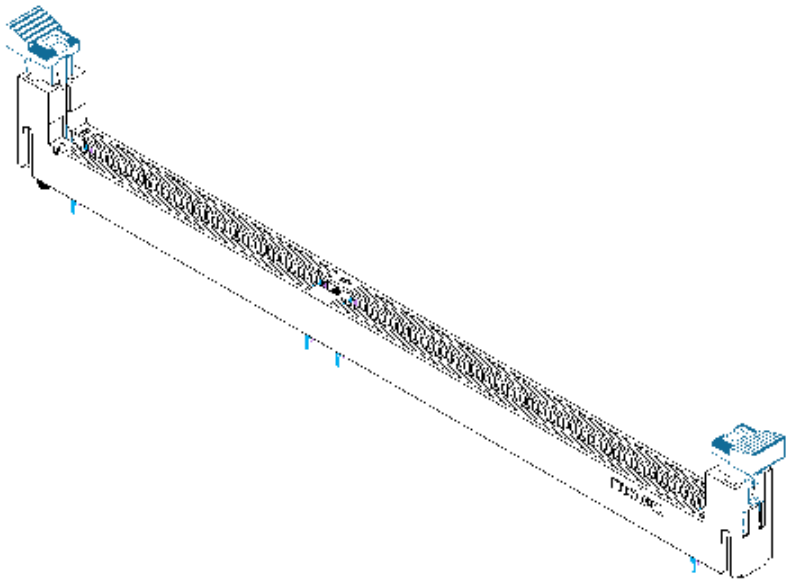

TENTATIVE RELEASE: THIS SPECIFICATION IS BASED ON DESIGN OBJECTIVES AND IS STRICTLY TENTATIVE. PRELIMINARY TEST DATA MAY EXIST, BUT THIS SPECIFICATION IS SUBJECTED TO CHANGE BASED ON THE RESULTS OF ADDITIONAL TESTING AND EVALUATION.

3.0 APPLICABLE DOCUMENTS AND SPECIFICATIONS

The following documents are part of this specification between the requirements of this specified herewith. In the event of conflict between the requirements of this specification and the product drawings, the product drawings shall take precedence. In the event of conflict between the requirements of this specification and reference documents, this specification shall take precedence.

4.0 RATINGS

4.1 VOLTAGE

30 Volts AC (RMS) / DC

4.2 CURRENT

1.0 Amps / Pin

4.3 FIELD LIFE AND TEMPERATURE

Field Life: 7 years
Field Temperature: 65°C

4.4 TEMPERTURE

Operating Temperature: -55°C ~ +85°C
Non Operating Temperature: -55°C ~ +85°C

5.0 PERFORMANCE

5.1 ELECTRICAL REQUIREMENTS

ITEM	DESCRIPTION	TEST CONDITION	REQUIREMENT
1	**Contact Resistance (Low Level)**	Mate connectors: apply a maximum voltage of 20 mV and a maximum current of 100 mA. (EIA-364-23)	10 mΩ Maximum.
2	**Insulation Resistance**	Unmate & unmount connectors: apply a voltage of 500 VDC between adjacent terminals and between terminals to ground. (EIA-364-21)	1 MΩ MINIMUM.
3	**Dielectric Withstanding Voltage**	Apply 500 VAC for 1 minute between adjacent terminals of an unmated connector. (EIA-364-20)	No breakdown.

5.2 MECHANICAL REQUIREMENTS

ITEM	DESCRIPTION	TEST CONDITION	REQUIREMENT
4	**Module Insertion Force (w/ Latches)**	EIA-364-13 Insert a steel gauge with the maximum thickness (1.37 ± 0.015mm) at a rate of 5 ± 1mm per minute.	10.8kgf Maximum.
5	**Terminal Retention Force**	Axial pullout force on the terminal in the housing at a rate of 25.4 ± 6 mm per minute.	Contact: 0.30kgf Minimum.
6	**Durability (Preconditioning)**	Mate and unmated connectors up to 5 cycles at a maximum rate of 10 cycles per minute prior to Environmental Tests. (EIA-364-09)	Contact Resistance: ΔR: 10 mΩ Maximum.
7	**Durability**	Mate and unmated connectors up to 25 cycles at a maximum rate of 10 cycles per minute prior to Environmental Tests.	Contact Resistance: ΔR: 10 mΩ Maximum.
8	**Random Vibration**	EIA-364-28 Module card, weighted 35 ± 5g with 30.0mm card height; Frequency range: 5Hz to 500Hz. 5 to 20 Hz (Slope): ($0.01g^2$/Hz) at 5Hz, ($0.02g^2$/Hz) at 20Hz; 20 to 500 Hz (Flat): ($0.02g^2$/Hz) at 20Hz ; Input acceleration is 3.13g RMS; Random control limit tolerance: ±3dB; Duration: 10 minutes in each X, Y and Z axis.	No Physical Damage Contact Resistance: ΔR: 10 mΩ Maximum No Discontinuities of 1 microsecond or longer duration.
9	**Shock (Mechanical)**	Module card, weighted 35 ± 5g with 30.0mm card height; Profile: Trapezoidal shock of 50g ±10%. Duration: 11ms Minimum Velocity change: 170 Inches/sec, ±10%. Quantity: Three drops in each of six directions. Total 18 drops per connector. (EIA-364-27)	No Physical Damage Contact Resistance: ΔR: 10 mΩ Maximum. No Discontinuities of 1 microsecond or longer duration.

10	**Module Rip out Force**	Pull up from the center of the module with the latches closed at a rate of 25 ± 6 mm/minute.	9.1kgf (20lbs) Minimum retention force of the module in connector with no damage.
11	**Reseating**	Manually mate and un-mate the connector with module card for 3 cycles.	No damage.
12	**Compliant pin insertion force to PCB (single)**	Insert compliant pin into applicable PCB hole with minimum hole size 0.51mm at a rate of 25 ± 6mm per minute.	4.5kgf (10lbs) Maximum per pin.
13	**Compliant pin retention force (single)**	Pull compliant pin axially from PCB with size of the hole in 0.64mm maximum at a rate of 25 ± 6mm per minute.	0.50kgf (1.1lbs) Minimum per pin.
14	**Module Un-mate Force**	Pull out 1.17 thick test blade from connector with latches removed at a rate of 12.7 ± 3 mm/minute.	1.68kgf Minimum per connector or 14gf per pin pair.
15	**Latch Overstress Force**	Apply an actuation force on the latch at a rate of 25 ± 6mm/minute in the fully open position.	3.5kgf (7.7lbs) Minimum force held for 10 seconds with no damage.
16	**Latch Actuation Force**	Apply an actuation force on the latch at a rate of 25 ± 6 mm/minute with recommended test module inserted into connector.	The force fully actuate the latch open shall be 4.5kgf (10lbs) Maximum per latch.

5.3 ENVIRONMENTAL REQUIREMENTS

ITEM	DESCRIPTION	TEST CONDITION	REQUIREMENT
17	**Shock (Thermal)**	Mate connectors; expose to 10 cycles of: Temperature °C — Duration (Minute) -55 +0/-3 — 30 +25 ±10 — 5 MAXIMUM +85 +3/-0 — 30 +25 ±10 — 5 MAXIMUM EIA-364-32	Contact Resistance: ΔR: 10 mΩ Maximum. Appearance: No Damage.

18	**Temperature Life (Preconditioning)**	Mate connectors; expose to: 91 hours at 105 ± 3°C. EIA-364-17	Contact Resistance: ΔR: 10 mΩ Maximum. Appearance: No Damage.
19	**Temperature Life**	Mate connectors; expose to: 165 hours at 105 ± 3°C. EIA-364-17	Contact Resistance: ΔR: 10 mΩ Maximum. Appearance: No Damage.
20	**Temperature Rise**	Mate the connectors, series 6 contacts and measure the temperature rise at the rated current of 1.0A after 4 hours.	Maximum Temperature Rise: 30 °C above ambient.
21	**Cyclic Temperature & Humidity**	Cycle the connector between 25°C ± 3°C at 80% ± 3% RH and 65°C ± 3°C at 50% ± 3% RH. Ramp times should be 0.5 hour and dwell times should be 1 hour. Dwell times start when the temperature and humidity have stabilized within the specified levels. Perform 24 such cycles. EIA-364-31	Contact Resistance: ΔR: 10 mΩ Maximum. Appearance: No Damage.
22	**Mixed Flowing Gas**	EIA-364-65, Class IIA, expose unmated connector for 160hrs in MFG chamber. Expose mated (to same test module mated during temp life preconditioning) connector for 80hrs in MFG chamber.	Contact Resistance: ΔR: 10 mΩ Maximum.
23	**Thermal Disturbance**	Cycle the connector between 15°C ± 3°C and 85°C ± 3°C, as measured on the part. Ramps should be a minimum of 2°C per minute, and dwell times should insure that contacts reach temperature extreme for a minimum of 5 minutes. No humidity control. 10 cycles total.	Contact Resistance: ΔR: 10 mΩ Maximum.

6.0 TEST SEQUENCE

Test Description Sequence	Test Group											
	1	2	3	4	5	6	7	8	9	10	11	12
Initial Contact Resistance	1	1	1		1							1
Durability (Preconditioning)	2	2	2									2
Durability					2							
Insulation Resistance				1 5								
Dielectric Withstand Voltage				2 6								
Contact Resistance	4 6	4 6 8	3 5 7		3							4, 6, 8, 10, 12
Temperature Life (Preconditioning)												3
Temperature Life	3											
Thermal Shock		3		3								
Thermal Disturbance												9
Cyclic Temp & Humidity		5		4								
Mixed Flowing Gas (unmated condition)												5
Mixed Flowing Gas (mated condition)												7
Mechanical Shock			6									
Random Vibration			4									
Reseating	5	7										11
Temperature Rise						1						
Module Insertion Force							1					
Latch Actuation Force										1		
Latch Overstress Force										2		
Module Rip out Force							2					
Compliant pin Insertion force to PCB								1				
Compliant pin Retention force to PCB								2				
Contact Retention									1			
Module Un-mate Force											1	
Sample Size per Test Group	5	5	5	5	5	5	5	5	5	5	5	5

7.0 PRINTED CIRCUITS BOARD SPECIFICATIONS

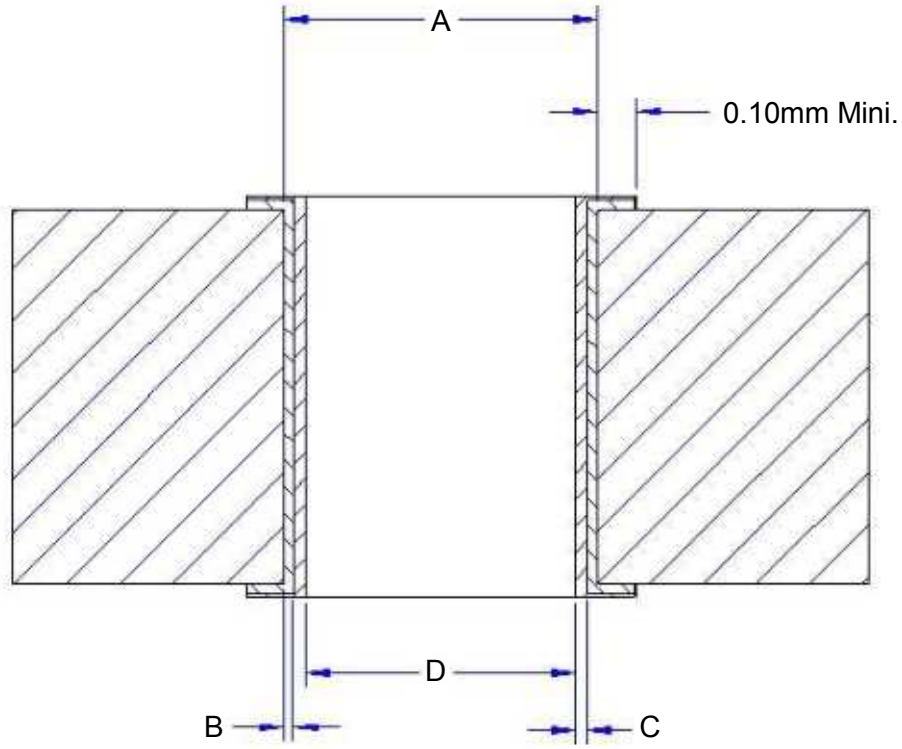

A	Drilled Hole	∅0.66 ± 0.01mm
B	Copper	0.025mm Min.
C	Tin / Lead or Tin	0.005 ~ 0.015mm
D	Plated Thru Hole	∅0.51 ~ 0.64mm

PLATED THRU HOLE (TIN IMMERSION) SPECIFICATION

A	Drilled Hole	∅0.66 ± 0.01mm
B	Copper	0.025mm Min.
C	OSP	0.005 ~ 0.015mm
D	Plated Thru Hole	∅0.51 ~ 0.64mm

OSP HOLE SPECIFICATION

8.0 PACKAGING

Parts shall be packed in trays and protected against damage during handling, transportation and storage.