PRODUCT SPECIFICATION FOR TOP ENTRY MODULAR JACKS

1.0 SCOPE

This specification covers the performance requirements of the MOLEX Top Entry Modular Telephone Jack. Where applicable, tests are in accordance with, or in excess of, all the requirements specified in IEC 60603-7 specification.

2.0 PRODUCT DESCRIPTION

2.1 Product Name and Part Number

85513-**** MODULAR JACK TOP ENTRY TRUE SMT SHORT PROFILE

2.2 Materials, Plating and Markings

CONTACT FINISH: GOLD
Post Plate 0.00127-0.00152mm Gold in contact area.
0.00190mm Min pure Tin in Tail area, both over 0.00127mm Min Nickel overall.
OR,
PALLADIUM NICKEL WITH GOLD FLASH:
Post plate 0.00005mm Min Gold Flash over 0.0010mm Min Palladium Nickel in contact area,
0.00190mm Min pure Tin in tail area, both over 0.00127mm Min Nickel overall.

See the appropriate sales drawings for information on materials, plating's and markings.

3.0 APPLICABLE DOCUMENTS AND SPECIFICATIONS:

See the sales drawings and the other sections of this specification for the necessary referenced documents and specifications.

IEC 60603-7
TIA-1096-A

Safety Agency Approval: UL File Number E107635

4.0 RATINGS:

4.1 Voltage: 125 Volts d.c.

4.2 Current: 1.5 Amp

4.3 Temperature:

Operating: -40°C to +85°C
Non-operating: -40°C to +85°C

5.0 TEST SCHEDULES

The following tests specify the characteristics to be checked and the requirements to be fulfilled.

For a complete test sequence, a minimum of 62 specimens are needed. This equals 6 groups of 10 And 1 group of 2, the group of 2 shall be for Group EP.

All specimens shall be subjected to the following tests. All the test group specimens shall be subjected to the preliminary group P tests in the following sequence.

The specimens shall then be divided into the appropriate number of groups. All connectors in each group shall undergo the following tests as described in the sequence given.

Test group P

TEST PHASE	TITLE	SEVERITY	REQUIREMENTS
P 1	GENERAL EXAMINATION PER IEC 60512-1-1, Test 1a	Visual examination	There shall be no defects that would impair normal operation
P 2	N/a		
P 3	CONTACT RESISTANCE IEC 60512-2-1, Test 2a	Mated connectors: (Measurement points per section 7.0)	Initial 20 mΩ maximum
P 4	INSULATION RESISTANCE IEC 60512-3-1, Test 3a, Method a.	Test voltage 100 V d.c. mated connectors	500 MΩ Minimum
P 5	VOLTAGE PROOF IEC 60512-4-1, Test 4a, Method a.	Contact/contact Method A Mated C	1000 V d.c. or a.c. peak

Test group AP

TEST PHASE	TITLE	SEVERITY	REQUIREMENTS
AP 1	INSERTION AND WITHDRAWAL FORCES PER IEC 60512-13-2, Test 13b	Connector locking device depressed.	Insertion force 20 N max, Withdrawal force 20 N max.
AP 2	EFFECTIVENESS OF CONNECTOR COUPLING DEVICE PER IEC 60512-15-6 Test 15f	Rate of load application 44,5 N/s maximum	50 N FOR 60 S ± 5 S
AP 3	RAPID CHANGE OF TEMPERATURE PER IEC 60512-11-4	-40°C to 70°C Mated connectors 25 cycles ı = 30 min recovery time 2 h	
AP 4	INSULATION RESISTANCE IEC 60512-3-1, Test 3a, Method a.	Test voltage 100 V ± 15 V d.c. Method A MATED CONNECTORS	PER P4
AP 5	CONTACT RESISTANCE IEC 60512-2-1, Test 2a	PER P3	20 mΩ maximum change from initial
AP 6	VOLTAGE PROOF IEC 60512-4-1, Test 4a, Method a.	PER P5	PER P5
AP 7	VISUAL EXAMINATION	PER P1	PER P1
AP 8	CYCLIC DAMP HEAT PER IEC 60068-2-38	21 cycles low temperature 25°C high temperature 65°C cold subcycle –10°C humidity 93 % Half of the samples in mated state Half of the samples in unmated state	
AP 9	CONTACT RESISTANCE IEC 60512-2-1, Test 2a	PER P3	20 mΩ maximum change from initial

Test group AP(continued).

TEST PHASE	TITLE	SEVERITY	REQUIREMENTS
AP 10	INSERTION AND WITHDRAWAL FORCES PER IEC 60512-13-2, Test 13b	PER AP1	PER AP1
AP 11	EFFECTIVENESS OF CONNECTOR COUPLING DEVICE PER IEC 60512-15-6 Test 15f	Rate of load application 44,5 N/s maximum	50 N FOR 60 S ± 5 S
AP 12	VISUAL EXAMINATION	PER P1	PER P1
AP 13	SOLDERABILITY	Solder Bath 260+0/-5°C Immersion Time 2,0 +/- 0.5s	The Dipped surface shall be covered with a smooth and bright solder coating. Some imperfections are acceptable but NOT concentrated in the same area.
AP 14	RESISTANCE TO SOLDERING HEAT	For recommended Reflow Profile (See Section 6.0)	Appearance: No Damage.
AP 15	VOLTAGE PROOF IEC 60512-4-1, Test 4a, Method a.	PER P5	PER P5

Test group BP

TEST PHASE	TITLE	SEVERITY	REQUIREMENTS
BP 1	LOCKING DEVICE MECHANICAL OPERATIONS	5,000 operations	After the specified number of operations, the specimens shall show no visual indication of fatigue or stress cracking of the locking device.
BP 2	MECHANICAL OPERATIONS PER IEC 60512-9-1, Test 9a	Mate connectors 1,250 cycles, at a maximum rate of 10mm/s maximum. Rest 1s (when mated and when unmated) Locking device inoperative.	
BP 3	FLOWING MIXED GAS CORROSION PER IEC 60512-11-7, Test 11g	Method 1, 4 days Half of the samples in mated state Half of the samples in unmated state	
BP 4	CONTACT RESISTANCE IEC 60512-2-1, Test 2a	PER P3	20 mΩ maximum change from initial
BP 5	MECHANICAL OPERATIONS PER IEC 60512-9-1, Test 9a	Mate connectors 1,250 cycles, at a maximum rate of 10mm/s maximum. Rest 5s (when unmated) locking device inoperative.	
BP 6	CONTACT RESISTANCE IEC 60512-2-1, Test 2a	PER P3	20 mΩ maximum change from initial
BP 7	INSULATION RESISTANCE IEC 60512-3-1, Test 3a, Method a.	100V ± 15V d.c. Method a Mated connectors	PER P4
BP 8	VOLTAGE PROOF IEC 60512-4-1, Test 4a, Method a.	PER P5	PER P5
BP 9	VISUAL EXAMINATION	PER P1	PER P1

Test group CP

TEST PHASE	TITLE	SEVERITY	REQUIREMENTS
CP 1	VIBRATION PER IEC 60512-6-4, Test 6d (See Section 7.0)	*f* = 10 Hz to 500 Hz, Amplitude: 0.35 mm Accel 50m/s² 10 sweeps / axis measurement points per section 7.0 (For arrangement,See IEC 60603-7, 7.3)	No discontinuities ≥ 10µs.
CP 2	CONTACT RESISTANCE IEC 60512-2-1, Test 2a No disturbance of the free connector to fixed connector electrical connections, between vibration test and contact resistance measurement	PER P3	20 mΩ maximum change from initial
CP 3	INSULATION RESISTANCE IEC 60512-3-1, Test 3a, Method a.	PER P4	PER P4
CP 4	VISUAL EXAMINATION	PER P1	PER P1

Test group DP

TEST PHASE	TITLE	SEVERITY	REQUIREMENTS
DP 1	ELECTRICAL LOAD AND TEMPERATURE PER IEC 60512-9-2, Test 9b	5 Connectors 500 h 70° C Recovery period 2 h	0.8A 5 connectors, no current 5 connectors
DP 2	INSULATION RESISTANCE IEC 60512-3-1, Test 3a, Method a.	PER P4	PER P4
DP 3	VOLTAGE PROOF IEC 60512-4-1, Test 4a, Method a.	PER P5	PER P5
DP 4	VISUAL EXAMINATION	PER P1	PER P1
DP 5	CONTACT RESISTANCE IEC 60512-2-1, Test 2a	PER P3	20 mΩ maximum change from initial
DP 6	GAUGING PER IEC 60603-7, Annex C		All samples tested shall pass all gauges and forces
DP 7	GAUGING CONTINUITY PER IEC 60603-7, Annex A	All contacts/specimen	10 µs maximum

Test Group EP

TEST PHASE	TITLE	SEVERITY	REQUIREMENTS
EP 1	N/A		
EP 2			
EP 3			
EP 4			
EP 5			
EP 6			
EP 7	INPUT TO OUTPUT RESISTANCE PER IEC 60512-2, Test 2a	Mate Connectors	Signal contact resistance = 200 mΩ maximum.
EP 8	RESISTANCE UNBALANCE PER IEC 60512-2, Test 2a	Cable termination to cable termination.	Unbalance resistance = 50 mΩ maximum.

Test group FP

TEST PHASE	TITLE	SEVERITY	REQUIREMENTS
FP 1	SURGE TEST PER IEC 60512, Test no. ITU_T K.20	Mated connectors, Table 2a /2b, Basic test level Tests 2.1.1a, 2.1.1b, 2.1.3, 2.2.1a and 2.3.1A	Test 2.1 & 2.2: Acceptance criteria A per ITU-T K.44, clause 9, Test 2.3: Acceptance criteria B PER ITU-T K.44, CLAUSE 9,
FP 2	INSULATION RESISTANCE IEC 60512-3-1, Test 3a, Method a.	100V ± 15V d.c. Method a Mated connectors	PER P4
FP 3	VISUAL EXAMINATION	PER P1	PER P1

Test group AZ

TEST PHASE	TITLE	SEVERITY	REQUIREMENTS
AZ1	HIGH TEMPERATURE (DRY HEAT) PER IEC 60068-2-2, Test 9b	Mate connectors; expose to: 96 hours at 85 ± 2°C Use Molex plug 500602-0819	Use Molex plug 500602-0819
AZ 2	CONTACT RESISTANCE IEC 60512-2-1, Test 2a	PER P3	PER P3.

6.0 SOLDERING CONDITIONS

RECOMMENDED

REFLOW SOLDERING SIMULATION PEAK PROFILE REFLOW AT 260 °C

DESCRIPTION	REQUIREMENT
Solder Type	None
Solder Flux Type	None
Paste Flux Type	None
Average Ramp Rate	3 °C/second maximum
Preheat Temperature	150 °C minimum; 200 °C maximum
Preheat Time	60 to 180 seconds
Ramp to Peak	3 °C/second maximum
Time over Liquidus (217 °C)	60 to 150 seconds
Peak Temperature	260 °C +0/-5 °C
Time within 5 °C of peak	20 to 40 seconds
Ramp – Cool Down	6 °C/second maximum
Time 25 °C to Peak	8 minutes maximum

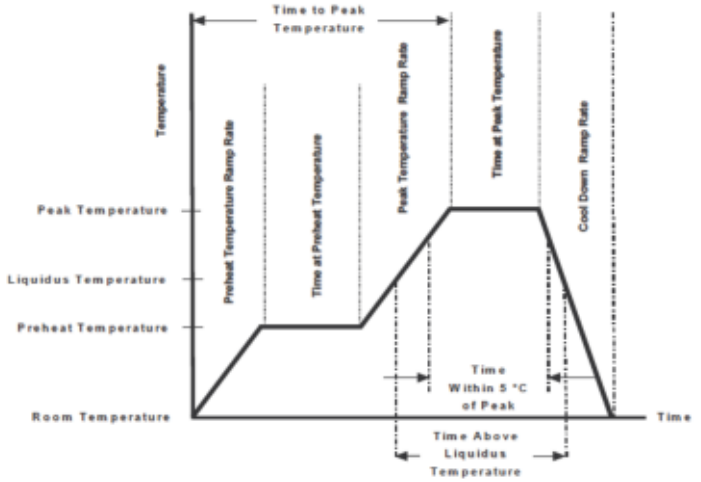

7.0 GAUGES AND FIXTURE

Termination Resistance Measurement Points

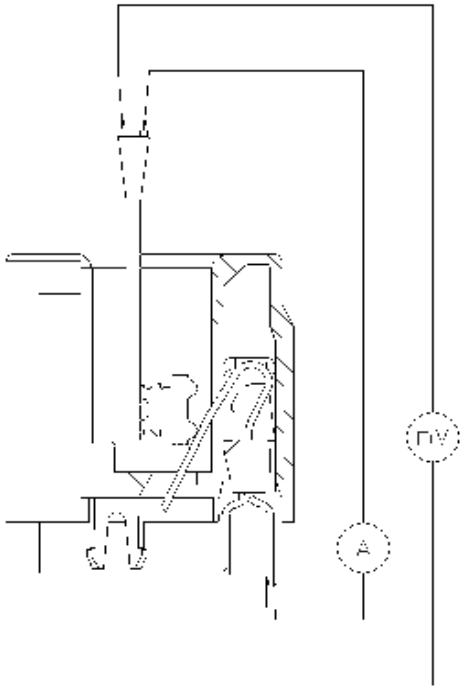

System resistance equals millivolt drop (mV) divided by test current (A)
(Conductor resistance will be deducted from measurement).

Arrangement for vibration test (test phase CP1)

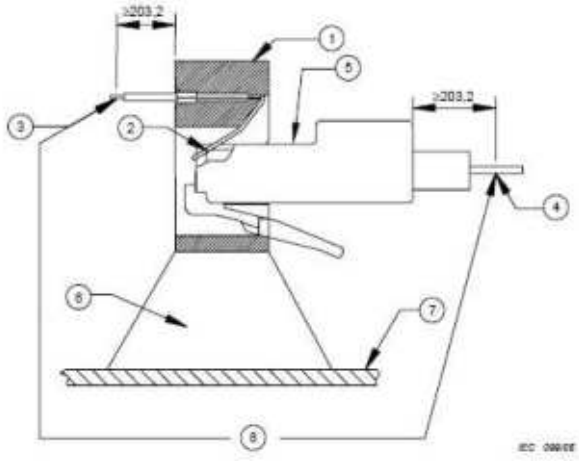

Key	
1	Fixed connector vibration feature.
2	Contact point.
3	Point A: secure to the non-vibrating member.
4	Point C: secure to the non-vibrating member.
5	Free connector.
6	Fixed connector rigidly fixed to the mounting plate.
7	Mounting plate.
8	Contact resistance measurement point.

Arrangement for vibration test
FROM IEC-60603-7

8.0 PACKAGING

Parts shall be packaged to protect against damage during handling, transit and storage.

9.0 QUALITY ASSURANCE PROVISIONS

The applicable Molex inspection plan specifies the sampling acceptable quality level to be used. Dimensioned and functional requirements shall be in accordance with applicable product drawings and this specification.