TABLE OF CONTENTS

SECTION **PAGE**

1.0 SCOPE 2
2.0 PRODUCT DESCRIPTION AND APPLICABLE DOCUMENTS 2
3.0 RATINGS 4
4.0 VISUAL EXAMINATION 5
5.0 ELECTRICAL PERFORMANCE 6
6.0 MECHANICAL PERFORMANCE 7
7.0 ENVIRONMENTAL PERFORMANCE 9
8.0 PACKAGING 10
9.0 TEST GROUPINGS 11
APPENDIX A 12
APPENDIX B 13
APPENDIX C 14
APPENDIX D 15
APPENDIX E 21
APPENDIX F 22
APPENDIX G 23
APPENDIX H: 24

THIS DOCUMENT CONTAINS INFORMATION THAT IS PROPRIETARY TO MOLEX INC. AND SHOULD NOT BE USED WITHOUT WRITTEN PERMISSION

1.0 SCOPE

This specification defines the performance for the Molex RAST 2.5 APPLI-MATE family of connectors.

2.0 PRODUCT DESCRIPTION AND APPLICABLE DOCUMENTS

Series No	Description	Applicable Sales Drawing	Application Specification	Agency Approval	Mating Interface	Packaging Specification
90871	2.5mm Appli-mate Female IDT Connector	SD-90871-001	AS-99033-0008	UL : E29179 CSA : LR 19980	Direct to PCB with optional 90873. Indirect through 93070 & 93072 or similar	PK-90871-001
90872	2.5mm Appli-mate Female IDT Connector - Voided (5mm Pitch)	SD-90872-001				
91716	2.5mm Appli-mate Female IDT Connector (PA 6)	SD-91716-001				
91717	2.5Appli-mate Female IDT Connector (PA 6) Voided (5mm Pitch)	SD-91717-001				
93037 93366 93616	Appli-mate 2.5 Female with pips & slots	SD-93037-001 SD-93366-001 SD-93616-001				
93039 93367 93617	Appli-mate 2 Female with pips & slots (5mm pitch)	SD-93039-001 SD-93367-001 SD-93617-001				
93050 93334 93466 93801	Appli-mate 2.5 Female GWT version	PSD-93050-0001 SD-93334-001 PSD-93466-0001 SD-93801-001				
93051 93339 93385 93465 93802	Appli-mate 2.5 Female GWT version (5mm pitch)	PSD-93051-0001 SD-93339-001 PSD-93385-0001 PSD-93465-0001 SD-93802-001				
91780	2.5mm Appli-mate Female IDT connector with Side latch	SD-91780-001			Direct to PCB. See sales drawing	
93070 93071	2.5mm Appli-mate Male vertical Header	SD-93070-001 SD-93071-001	N/A		90871, 90872, 91716, 91717 or similar	PK-93070-001
93072 93073	2.5mm Appli-mate Male right angle header	SD-93072-001 SD-93073-001				
90873	2.5mm Appli-mate Male Guide Frame	SD-90873-001		N/A		

THIS DOCUMENT CONTAINS INFORMATION THAT IS PROPRIETARY TO MOLEX INC. AND SHOULD NOT BE USED WITHOUT WRITTEN PERMISSION

Female Connector (Various Options Available)

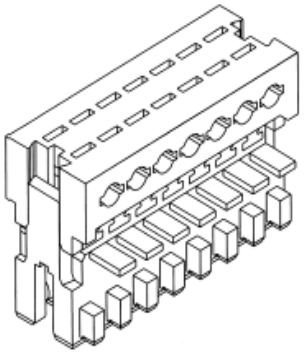

90871 90872
91716 91717
91780 93037
93039 93050
93051 93334
93339 93366
93367 93385
93466 93465
93616 93617
93801 93802

Male Header (Vertical and Right Angle)

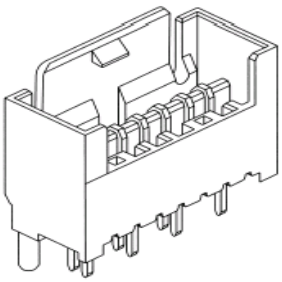

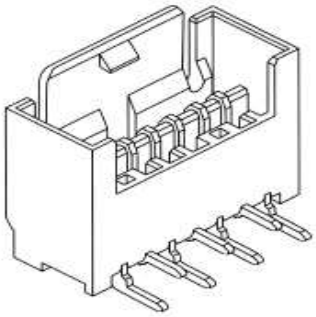

93070
93071
93072
93073

Male Guide Frame (Optional)

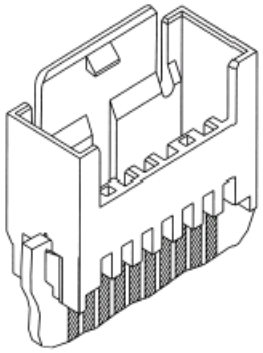

90873

THIS DOCUMENT CONTAINS INFORMATION THAT IS PROPRIETARY TO MOLEX INC. AND SHOULD NOT BE USED WITHOUT WRITTEN PERMISSION

3.0 RATINGS

Item	Description	Rating	Applicable Series		
3.1	Current (See derating curve Appendix D)	4 Amp	90871 90872 91716 91717 91780 93465 93801	93037 93039 93050 93051 93334 93616 93802	93339 93366 93367 93385 93466 93617
		2 Amp			
		6 Amp	93070 93071	93072 93073	
		N/A		90873	
3.2	Voltage	32V AC	90871 91716 91780 93466	93037 93050 93070 93616	93072 93334 93366 93801
		250V AC	91717 93039 93367 93051	93071 93385 93073 93339	93465 93617 93802
		N/A		90873	
3.3	Durability	10 Cycles	90871 90872 90873 91716 91717 91780 93037 93616 93039 93050	93051 93070 93071 93072 93073 93617 93334 93339 93366 93367	93385 93465 93466 93801 93802
3.4	Operating Temperature Range (See derating curve Appendix D)	4 Amp: -20°C to 60°C With header			
		2 Amp: -20°C to +120°C double sided PCB or Header -20°C to +110°C Single Sided PCB			
3.5	Storage Temperature Range	-20°C to +85°C			
3.6	Material RTI UL 746b	125°C		91780	
		130°C	90871 90872 90873 93037 93039 93050 93616 93802	93051 93070 93071 93072 93073 93334 93617	93339 93366 93367 93385 93465 93466 93801
		150°C		91716 91717	

THIS DOCUMENT CONTAINS INFORMATION THAT IS PROPRIETARY TO MOLEX INC. AND SHOULD NOT BE USED WITHOUT WRITTEN PERMISSION

4.0 VISUAL EXAMINATION

Item	Description	Test Condition	Requirements
4.1	Visual Examination (IEC 512-1-1)	Parts checked for: Identification, Workmanship Finish, Markings, Cosmetic issues, Tool marks.	Meets requirements of product drawing. All parts shall be free of hazardous substances. All parts to be free of dirt and grease. No Defects

THIS DOCUMENT CONTAINS INFORMATION THAT IS PROPRIETARY TO MOLEX INC. AND SHOULD NOT BE USED WITHOUT WRITTEN PERMISSION

5.0 ELECTRICAL PERFORMANCE

Item	Description	Test Condition	Requirements	Applicable Series
5.1	Contact Resistance (IEC 60512-2-1)	Mated connector measured as per Appendix A: Low level contact resistance @20mV, 100mA max.	5mΩ maximum (double sided PCB). 10 mΩ max. (single sided PCB or Header*)	90871 93039 93071 90872 93050 93072 91716 93051 93073 91717 91780 93339 93037 93070 93334 93366 93367 93385 93465 93466 93616 93617 93801 93802
5.2	Insulation resistance (IEC 60512-3-1) Method C	Unmated connector with 500VDC between adjacent contacts for 1 minute.	>1000 MΩ >5MΩ after salt spray 7.6	
5.3	Dielectric Withstand Voltage (IEC 60512-4-1) Method C	Unmated connector with rated Voltage eff./60sec	Rated Voltage = 1000V AC No Breakdown	90871 93037 93072 91716 93050 93334 91780 93070 93339 93366 93385 93466 93616 93801
			Rated Voltage = 1500V AC No Breakdown	90872 93071 93051 91717 93039 93073 93367 93465 93617 93802
5.4	Current Induced Temperature Rise (IEC 512-2,5a)	Load all circuits with the rated current	A maximum temperature rise of ≤ 30°C	90871 93039 93071 90872 93050 93072 91716 93051 93073 91717 91780 93339 93037 93070 93334 93366 93367 93385 93465 93466 93616 93617 93801 93802
5.5	Derating Curve (IEC 60512-2,5b)	See Appendix D	See Appendix D	
5.6	Contact Resistance 1Amp (IEC 60512-2-2)	Mated connector measured as per Appendix A: Test current 1Amp.	Contact resistance ≤12mΩ	

Note: Electrical Performance not applicable to series 90873

THIS DOCUMENT CONTAINS INFORMATION THAT IS PROPRIETARY TO MOLEX INC. AND SHOULD NOT BE USED WITHOUT WRITTEN PERMISSION

6.0 MECHANICAL PERFORMANCE

Item	Description	Test Condition	Requirements	Applicable Series
6.1	Mating Force (IEC 60512-13-1)	10 cycles. Force measured using a polished, steel pin as per appendix G	≤ 4N per terminal for all 10 cycles	90871 91717 93339 90872 93051 93050 91716 93334 93385 93466 93616 93801 93802
			≤ 10N +4N per terminal for all 10 cycles (using Standard FR4 PCB)	93037 93366 93039 93367 93465 93617
			≤ 15N +4N per terminal for all 10 cycles	91780
			N/A	93070 93072 93071 93073
6.2	Unmating Force (IEC 60512-13-1)	10 cycles. Force measured using a polished, steel pin as per appendix G	≥ 0.5N per terminal for all 10 cycles	90871 93339 93334 90872 91716 93050 93051 91717 93385 93466 93465 93801 93802
			1st Withdrawal ≥ 7N + 0.5N per terminal, 10th Withdrawal ≥ 5N + 0.5N per terminal	93037 93616 93039 93617 93366 93367
			1st Withdrawal ≥ 10N + 0.5N per terminal 10th Withdrawal ≥ 5N + 0.5N per terminal (See appendix E)	91780
			N/A	93070 93072 93071 93073
6.3	IDT Wire Retention Force	Apply a straight tensile force parallel and at 90° to the direction of the wire at a rate of 25-100mm per minute. Setup as per appendix H	Parallel to wire ≥ 30N 90° to the wire ≥ 30N	90871 93039 93339 90872 93050 93366 91716 93385 93465 91717 93616 93466 93367 93617 93801 91780 93051 93802 93037 93334
			N/A	93070 93072 93071 93073

THIS DOCUMENT CONTAINS INFORMATION THAT IS PROPRIETARY TO MOLEX INC. AND SHOULD NOT BE USED WITHOUT WRITTEN PERMISSION

6.4	Vibration (IEC 60068-2-6,Fc)	Frequency cycle: 5-500-5Hz Displacement: 7.5mm Acceleration : 2g 20 min sweep 3hrs per axis	Initial contact resistance as per 5.1. Final contact resistance ≤ twice the initial contact resistance. No discontinuities greater than 1.0 microsecond.	90871 90872 91716 91717 93037 93366 93039 93050	93051 91780 93070 93367 93616 93617 93071 93072	93073 93334 93339 93385 93465 93466 93801 93802
6.5	Vibration	Connectors to be terminated with 0.35sq mm wire L=300mm and mated to PCB. Ends of wire to be secured at 210mm from the connector. Test current = 100+/- 10mA. Current interruptions no longer then 1 µsec. Test on three axes 8 hrs each. The vibration frequency shall be continuously varied at 1 0ctave/minute back and forward from 10 to 200Hz. Amplitude 1mm max constant peak to peak until the crossover frequency where acceleration shall be constant at 5g	Contact Resistance within limits after test	90871 90872 91716 91717 93037 93366 93801 93802	93039 93050 93051 91780 93070 93367 93616 93617	93071 93072 93073 93334 93339 93385 93466 93465
6.6	Drop Shock (IEC 60068-2-27)	1/2 sine, 50G, 11 milliseconds 3 shocks in each of 6 directions	Initial contact resistance as per 5.1. Final contact resistance ≤ twice the initial contact resistance. No discontinuities greater than 1.0 microsecond	90871 90872 91716 91717 93037 93366 93801 93802	93039 93050 93051 91780 93070 93367 93616 93617	93071 93072 93073 93334 93339 93385 93465 93466

Note: Mechanical Performance not applicable to 90873 series

THIS DOCUMENT CONTAINS INFORMATION THAT IS PROPRIETARY TO MOLEX INC. AND SHOULD NOT BE USED WITHOUT WRITTEN PERMISSION

7.0 ENVIRONMENTAL PERFORMANCE

Item	Description	Test Condition	Requirements	Applicable Series
7.1	Life test	See appendix B for Temp / Time Profile. See appendix C for PCB structure.	Indirect through Header: Temp / Time Profile A for 6,000 cycles. Final Rc ≤ 2 times initial Rc as per 5.6 at rated current Direct to PCB: Temp / Time Profile A for 6,000 cycles. Final Rc ≤ 3 times initial Rc as per 5. 6 at rated current	90871 93039 93071 90872 93050 93072 91716 93051 93073 91717 91780 93334 93037 93070 93339 93366 93367 93385 93801 93616 93465 93802 93617 93466
7.2	Vibration/ Climate Test	300 cycles as temp/time profile Appendix B. Vibrate in chamber as per 6.4 for 100 hrs in each X,Y,Z directions	Final Rc ≤ 2 times initial Rc as per 5.1. No Discontinuity greater than 1uSec	
7.3	Damp Heat Test (IEC 60068-2-78)	14 days at 40°C and 93% R.H. No current flow during exposure.	Final Rc ≤ 2 times initial Rc as per 5.1	
7.4	Thermal Cycling (Ageing test)	14 cycles: one cycle consists of 16 hours at 80 °C followed by 8 hours at 20 °C maximum		
7.5	SO_2 (DIN 50018-0, 0.2S)	T_{amb} = +40°C SO_2 = 0.2 liter H_2O = 2 liter 8 hours exposure time 16 hours recovery time	Final Rc ≤ 2 times initial Rc as per 5.1	
7.6	Salt Mist Spray (IEC 60068-2-11)	T_{amb} = 35°C Rel. Humidity = 95% NaCl concentrate = 50g/ltr Duration 72 Hrs	Final Rc ≤ 2 times initial Rc as per 5.1 No internal corrosion traces. Insulation resistance @ 500V as per 5.2	

THIS DOCUMENT CONTAINS INFORMATION THAT IS PROPRIETARY TO MOLEX INC. AND SHOULD NOT BE USED WITHOUT WRITTEN PERMISSION

7.7	Cold Exposure (IEC 60068-2-1) Test Ab	2 hours at –40°C	Final Rc ≤ 2 times initial Rc as per 5. 1 No physical damage	90871 93039 93071 90872 93050 93072 91716 93051 93073 91717 91780 93334 93037 93070 93339 93366 93367 93385 93801 93616 93465 93802 93617 93466
7.8	Dry Heat (Storage) (IEC 60068-2-2) Test Bb	85°C for 96 hours	Final Rc ≤ 2 times initial Rc as per 5.1	
7.9	Ball Pressure Test (Values taken from Plastic Material Specification)	Test for 1 hour at +125°C	Diameter of footprint not to exceed 2 mm^2	
7.10	Glow Wire Test (IEC60695-2-11)	Connector subject to rated temp glow wire for 30 seconds on X, Y & Z axis. See Appendix F for diagram	Glow wire temp = 650°C. Suitable for < or = 0.2Amps	90871 91717 91716 91780 90872
			Glow wire temp = 750°C. Suitable for > or = 0.2Amps	93037 93070 93073 93039 93071 93339 93050 93072 93334 93051 93366 93367 93385 93465 93616 93466 93617 93801 93802
7.11	Solder-ability Test ** (IEC-60068-2-20)	Solder Temp = 260Deg C. Immersion & Withdrawal speed = 25mm/min +/-10%. Immersion time = 2s	Solder Tail completely wetted. Smooth bright solder. Pin-holes and voids should not be concentrated in one section of wetted area	93070 93071 93072 93073
			N/A	90871 93037 91780 90872 93039 90873 91716 93050 93334 91717 93051 93339 93366 93367 93385 93801 93616 93465 93802 93617 93466

** = This product is to be soldered by Wave Solder process only

Note: Environmental Performance not applicable to 90873 series

8.0 PACKAGING

Parts shall be packaged to protect against damage during handling, transit and storage. No Styrofoam shall be used in any packing that comes in direct contact with the connectors.

THIS DOCUMENT CONTAINS INFORMATION THAT IS PROPRIETARY TO MOLEX INC. AND SHOULD NOT BE USED WITHOUT WRITTEN PERMISSION

9.0 TEST GROUPINGS

Item	Description	A	B	C	D	E	F	G	H	I	J
4.1	Visual examination	1,3	1,7	1,5	1,9	1,5	1,7	1,5		1,7	1, 5
5.1	Contact Resistance		2,4,6	2,4	2,6	2,4	2,4,6				
5.2	Insulation Resistance				3,7					3,16	
5.3	Voltage proof				4,8						
5.4	Max temp rise								1		
5.5	De-Rating curve								1		
5.6	Contact resistance (1 Amp)							2,4		2,15	2, 4
6.1	Mating Force								1		
6.2	Un-mating Force								1		
6.3	IDT Wire Retention								1		
6.4	Vibration		3								
6.5	Vibration										3
6.6	Drop Shock		5								
7.1	Life Test	2									
7.2	Vibration/Climate Test			3							
7.3	Damp Heat Test				5						
7.4	Thermal Cycling					3					
7.5	SO_2							3			
7.6	Salt Mist Spray									4	
7.7	Cold Exposure						3				
7.8	Dry heat storage						5				
7.9	Ball Pressure test								1		
7.10	Glow wire test								1		
7.11	Solder-ability Test								1		

THIS DOCUMENT CONTAINS INFORMATION THAT IS PROPRIETARY TO MOLEX INC. AND SHOULD NOT BE USED WITHOUT WRITTEN PERMISSION

APPENDIX A

CONTACT RESISTANCE MEASUREMENT

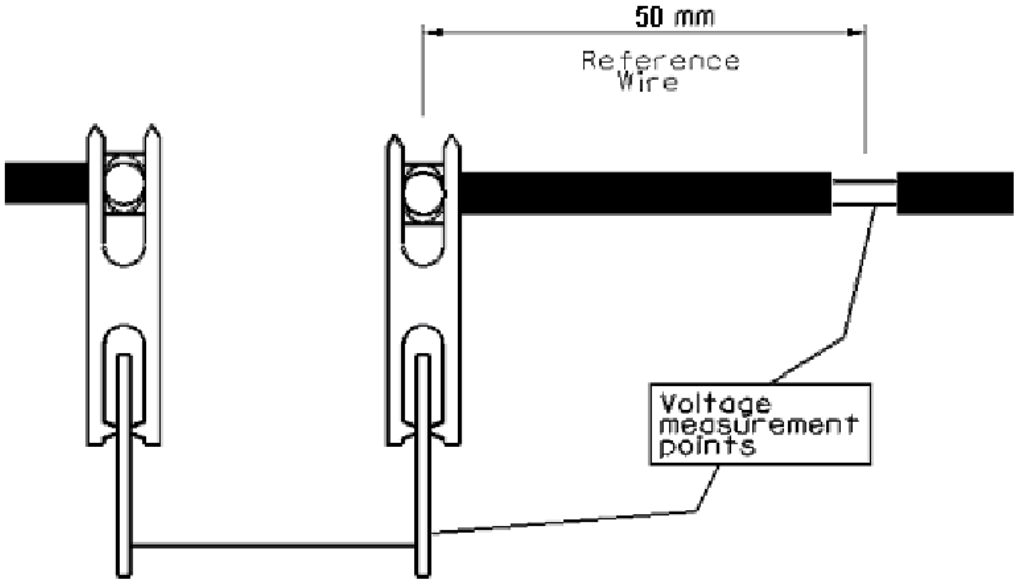

THIS DOCUMENT CONTAINS INFORMATION THAT IS PROPRIETARY TO MOLEX INC. AND SHOULD NOT BE USED WITHOUT WRITTEN PERMISSION

APPENDIX B

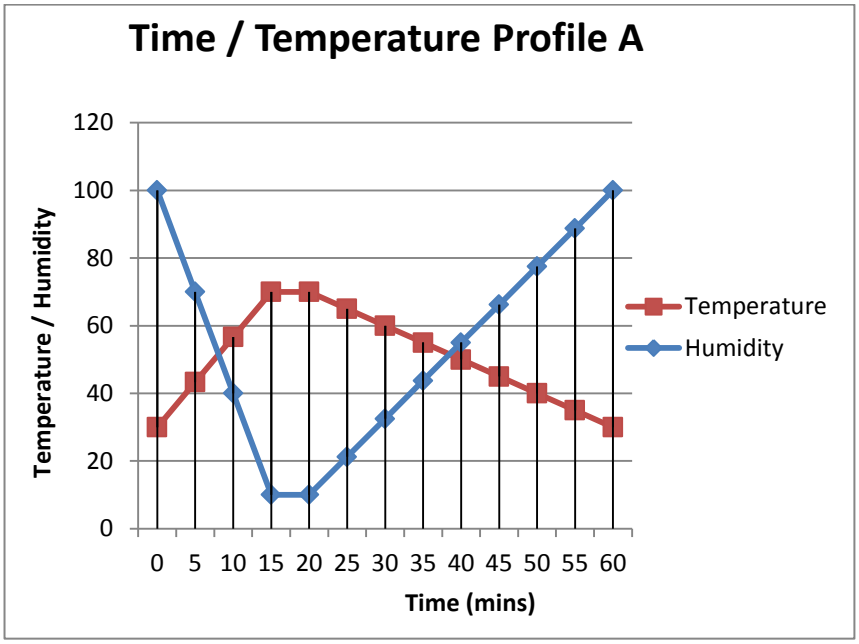

LIFE TEST- TEMPERATURE – TIME PROFILE A

During the 6,000 hours life test, all test specimens must undergo the following:

- Power on at rated current for 0-20 mins, Power Off for 20-60mins
- Contact Resistance Measurements: as per IEC 512, Part 2 Every 100 hours of the life-test. Up to 1000 hr and every 200 hrs of life test for remainder

THIS DOCUMENT CONTAINS INFORMATION THAT IS PROPRIETARY TO MOLEX INC. AND SHOULD NOT BE USED WITHOUT WRITTEN PERMISSION

APPENDIX C

RECOMMENDED PCB SPECIFICATION

Reference the relevant Sales Drawing for a recommended PCB pad layout.
Material data of the test-PCB:
PCB (single side): CEM1, 1.5mm 70µm Cu; 2mm width of contact pads, 1µm min Sn (HAL).
PCB (single or double sided): FR4, 1.5mm 35-70µm Cu; 2mm width of contact pads 5-20µm Sn (Electro-plated) on both sides.

THIS DOCUMENT CONTAINS INFORMATION THAT IS PROPRIETARY TO MOLEX INC. AND SHOULD NOT BE USED WITHOUT WRITTEN PERMISSION

APPENDIX D

DERATING CURVE RAST 2.5 DIRECT (0.22wire)

Series 91716 & 91717

Current	Tb	Tu	Delta T	Tm-Delta T	(Current) 20%
0				150.0	0.0
1	**28.5**	20.5	8.0	142.0	0.8
2	**42.7**	21.7	21.0	129.0	1.6
3	**72.5**	22.0	50.5	99.5	2.4
4	**98.6**	21.5	77.1	72.9	3.2
5	**141.2**	21.3	119.9	30.1	4.0

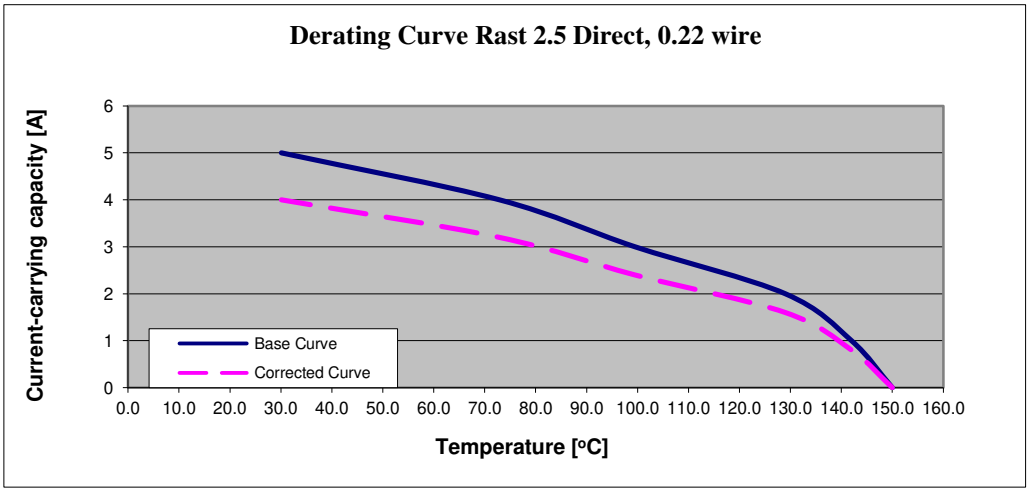

Tb	Measured Temperature
Tu	Room Temperature
Delta T	Tb-Tu
Tm	Upper temp limit of material

THIS DOCUMENT CONTAINS INFORMATION THAT IS PROPRIETARY TO MOLEX INC. AND SHOULD NOT BE USED WITHOUT WRITTEN PERMISSION

DERATING CURVE RAST 2.5 SIDE LATCHED (0.22wire)

Series 91780

Current	Tb	Tu	Delta T	Tm-Delta T	(Current) 20%
0				125.0	0.0
1	**24.0**	19.7	4.3	115.7	0.8
2	**38.6**	20.5	18.1	101.9	1.6
3	**61.8**	20.4	41.4	78.6	2.4
4	**95.4**	20.0	75.4	44.6	3.2
5	**122.7**	20.3	102.4	17.6	4.0

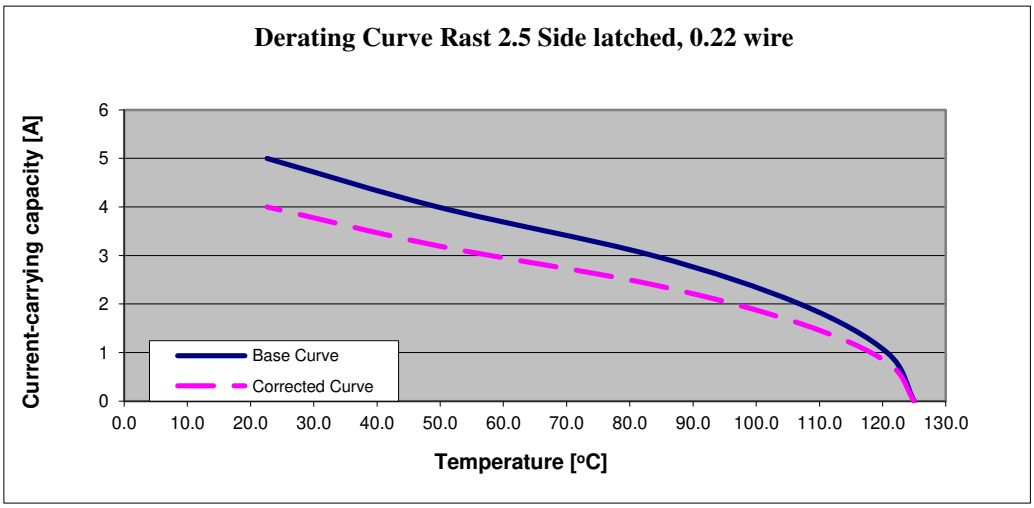

Tb	Measured Temperature
Tu	Room Temperature
Delta T	Tb-Tu
Tm	Upper temp limit of material

THIS DOCUMENT CONTAINS INFORMATION THAT IS PROPRIETARY TO MOLEX INC. AND SHOULD NOT BE USED WITHOUT WRITTEN PERMISSION

DERATING CURVE RAST 2.5 INDIRECT (HEADER 0.22wire)

Series 91716 & 91717

Current	Tb	Tu	Delta T	Tm-Delta T	(Current) 20%
0				150.0	0.0
1	24.8	22.7	2.1	147.9	0.8
2	32.1	22.7	9.4	140.6	1.6
3	47.3	22.7	24.6	125.4	2.4
4	62.8	22.7	40.1	109.9	3.2
5	82.6	22.8	59.8	90.2	4.0
6	105.4	22.7	82.7	67.3	4.8
7	138.7	22.6	116.1	33.9	5.6
8	153.0	22.7	130.3	19.7	6.4
9	132.3	22.7	109.6	40.4	7.2

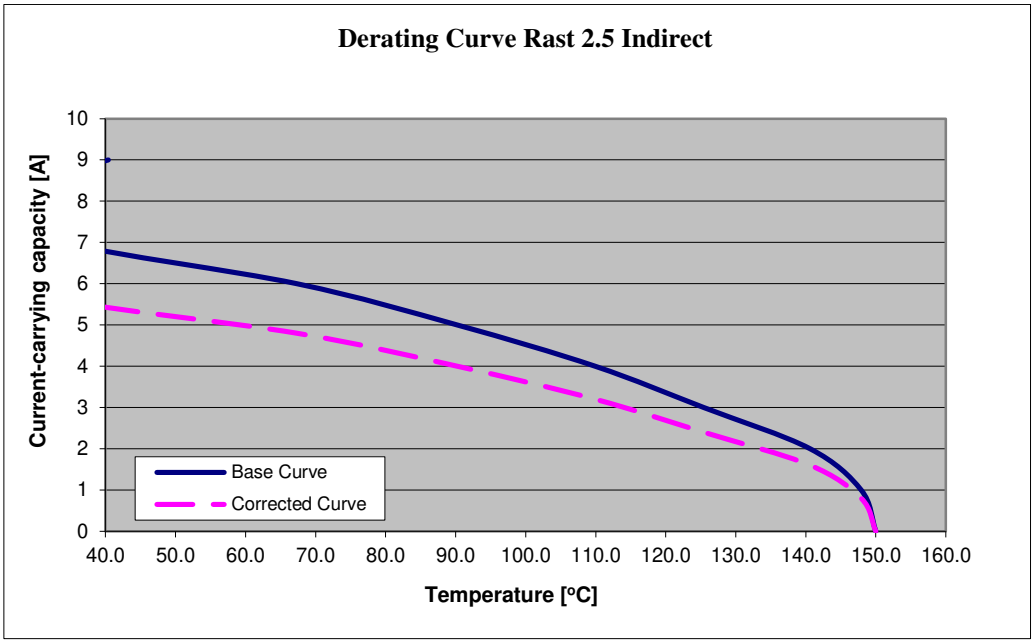

Tb	Measured Temperature
Tu	Room Temperature
Delta T	Tb-Tu
Tm	Upper temp limit of material

THIS DOCUMENT CONTAINS INFORMATION THAT IS PROPRIETARY TO MOLEX INC. AND SHOULD NOT BE USED WITHOUT WRITTEN PERMISSION

DERATING CURVE RAST 2.5 DIRECT (0.38wire)

Series 91716 & 91717

Current	Tb	Tu	Delta T	Tm-Delta T	(Current) 20%
0				150.0	0.0
1	27.0	21.0	6.0	144.0	0.8
2	41.5	21.1	20.4	129.6	1.6
3	61.0	21.8	39.2	110.8	2.4
4	93.3	20.2	73.1	76.9	3.2
5	136.7	21.6	115.1	34.9	4.0
6	171.2	22.2	149.0	1.0	4.8

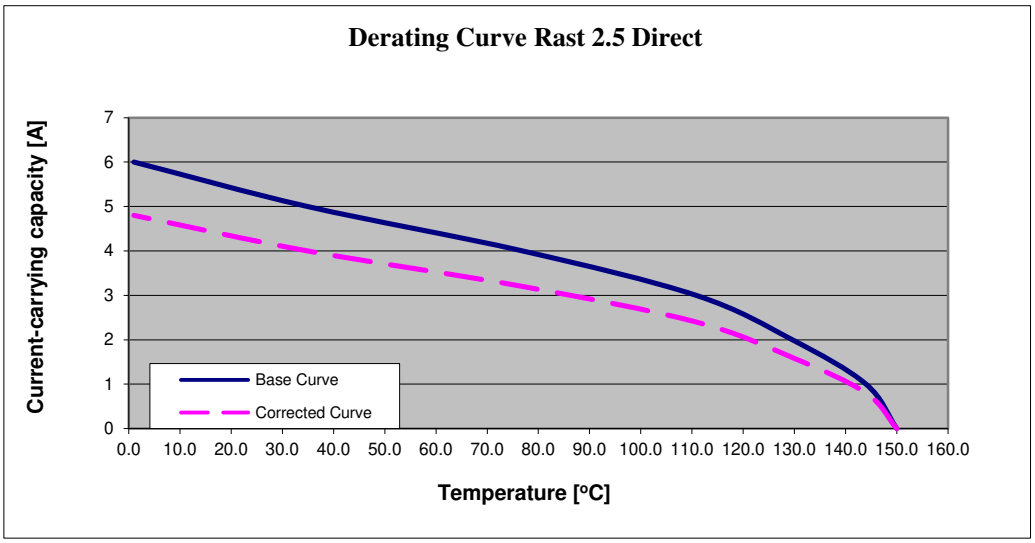

Tb	Measured Temperature
Tu	Room Temperature
Delta T	Tb-Tu
Tm	Upper temp limit of material

THIS DOCUMENT CONTAINS INFORMATION THAT IS PROPRIETARY TO MOLEX INC. AND SHOULD NOT BE USED WITHOUT WRITTEN PERMISSION

DERATING CURVE RAST 2.5 INDIRECT (header 0.38 wire)

Series 91716 & 91717

Current	Tb	Tu	Delta T	Tm-Delta T	(Current)20%
0				150.0	0.0
1	25.2	21.1	4.1	145.9	0.8
2	28.5	20.4	8.1	141.9	1.6
3	36.3	21.4	14.9	135.1	2.4
4	45.7	21.1	24.6	125.4	3.2
5	59.0	20.4	38.6	111.4	4.0
6	74.3	20.8	53.5	96.5	4.8
7	91.5	21.1	70.4	79.6	5.6
8	112.8	22.8	90.0	60.0	6.4
9	132.3	22.5	109.8	40.2	7.2

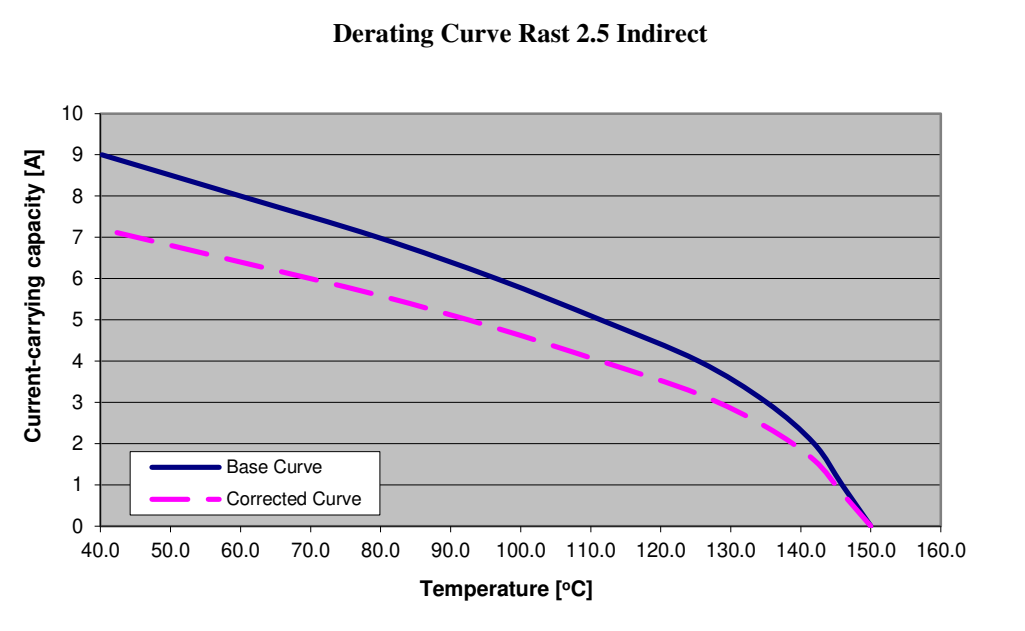

Tb	Measured Temperature
Tu	Room Temperature
Delta T	Tb-Tu
Tm	Upper temp limit of material

THIS DOCUMENT CONTAINS INFORMATION THAT IS PROPRIETARY TO MOLEX INC. AND SHOULD NOT BE USED WITHOUT WRITTEN PERMISSION

DERATING CURVE RAST 2.5 SIDE LATCH (0.38 wire)

Current	Tb	Tu	Delta T	Tm-Delta T	(Current)20%
0				125.0	0.0
1	24.5	20.1	4.4	120.6	0.8
2	41.2	20.9	20.3	104.7	1.6
3	64.1	21.2	42.9	82.1	2.4
4	76.9	20.7	56.2	60.2	3.2
5	123.0	20.6	102.4	22.6	4.0

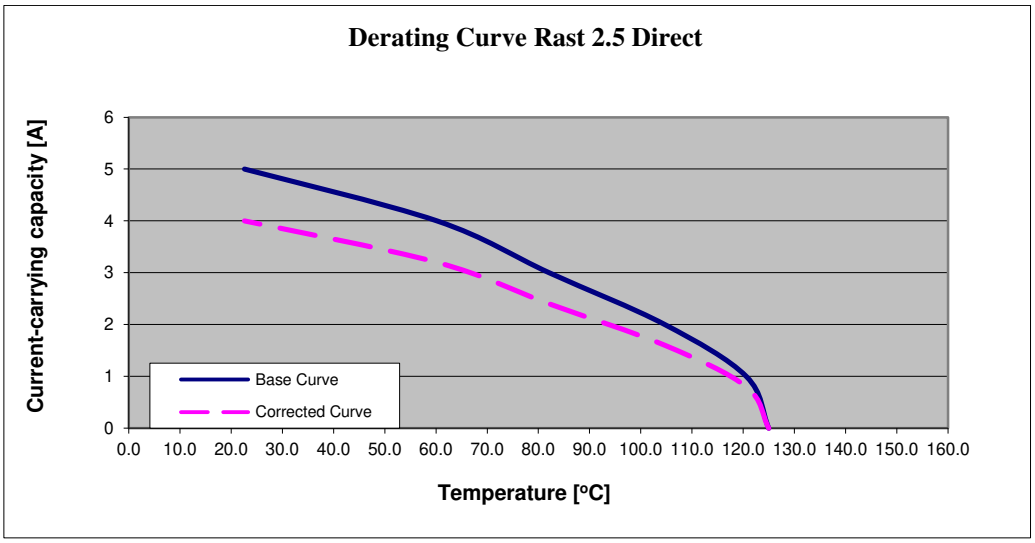

Tb	Measured Temperature
Tu	Room Temperature
Delta T	Tb-Tu
Tm	Upper temp limit of material

THIS DOCUMENT CONTAINS INFORMATION THAT IS PROPRIETARY TO MOLEX INC. AND SHOULD NOT BE USED WITHOUT WRITTEN PERMISSION

APPENDIX E

Un-mating force test set-up of Side latch

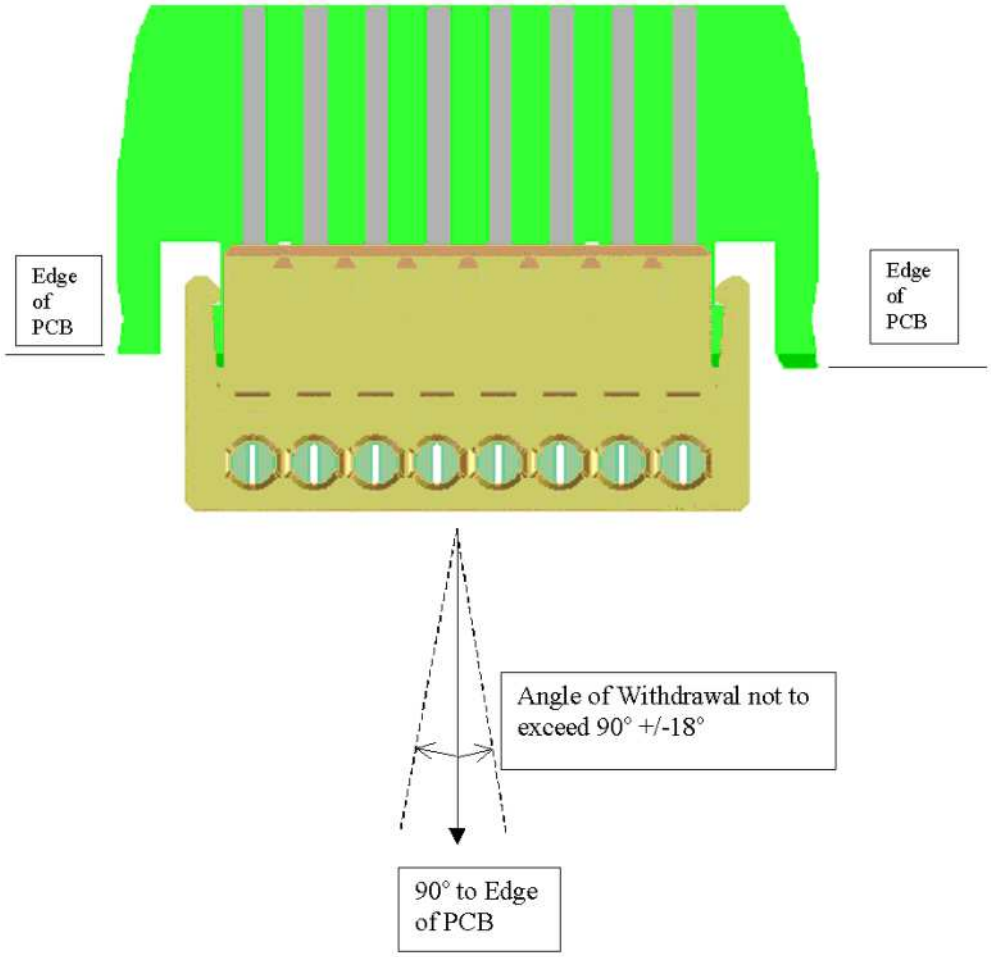

THIS DOCUMENT CONTAINS INFORMATION THAT IS PROPRIETARY TO MOLEX INC. AND SHOULD NOT BE USED WITHOUT WRITTEN PERMISSION

APPENDIX F

Glow wire test points

Female Connector

Position 1

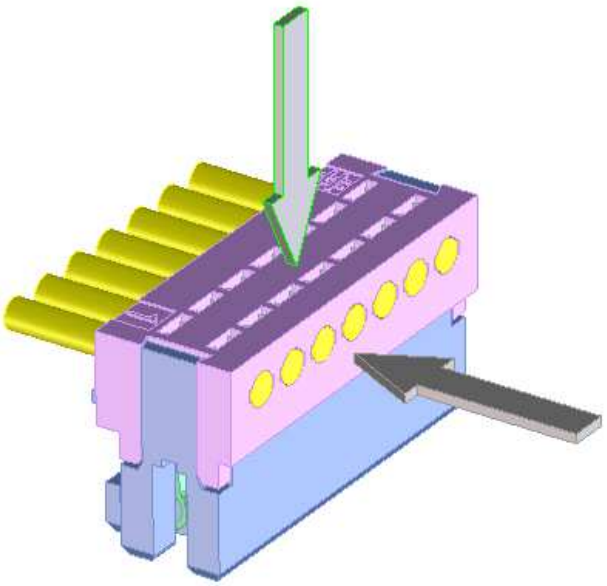

Position 2

Male Connector

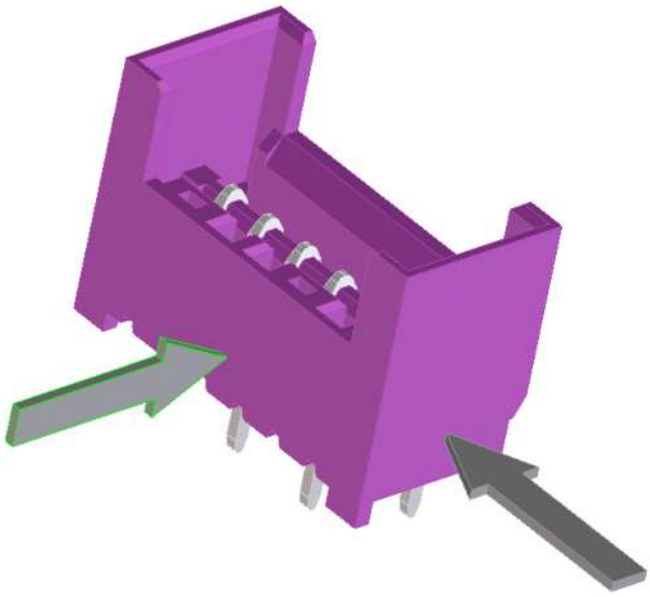

Position 1

Position 2

APPENDIX G

Gauge for mating/unmating test

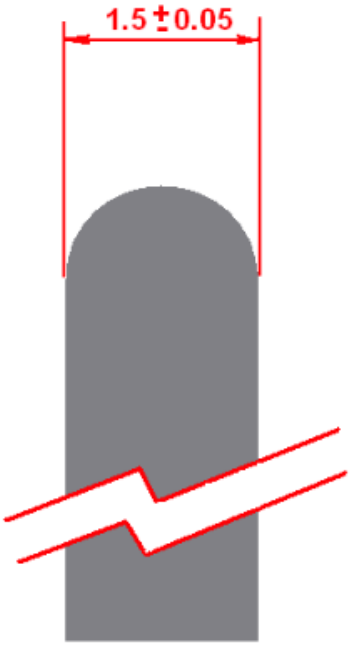

THIS DOCUMENT CONTAINS INFORMATION THAT IS PROPRIETARY TO MOLEX INC. AND SHOULD NOT BE USED WITHOUT WRITTEN PERMISSION

APPENDIX H:

IDT wire retention test

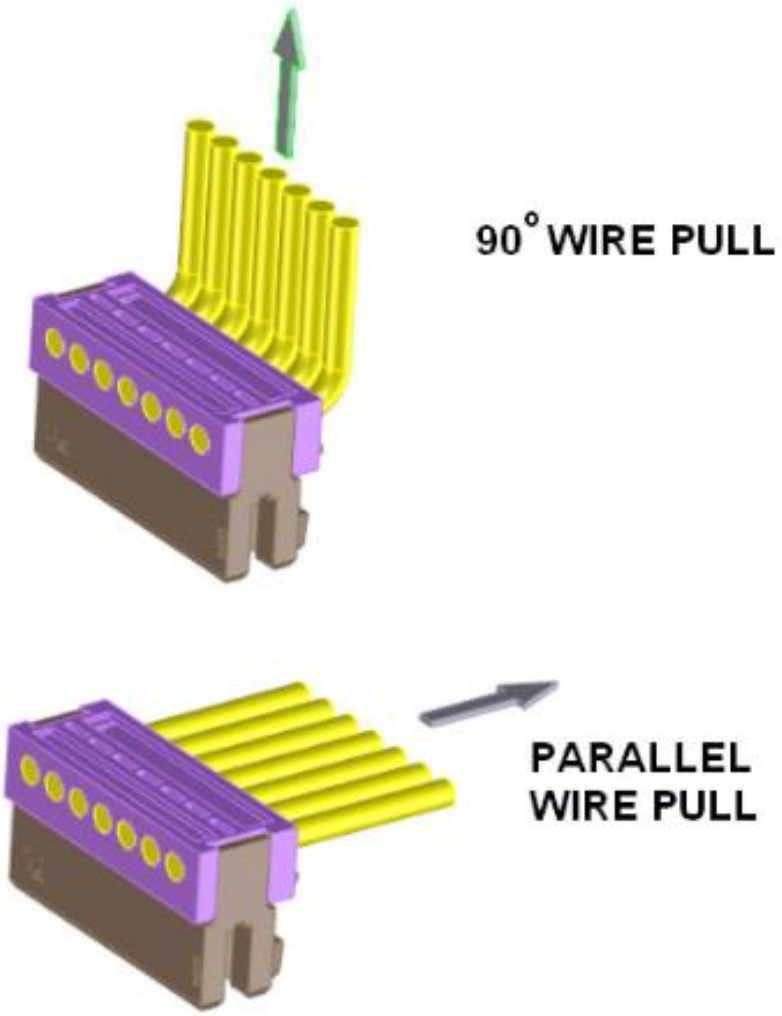

THIS DOCUMENT CONTAINS INFORMATION THAT IS PROPRIETARY TO MOLEX INC. AND SHOULD NOT BE USED WITHOUT WRITTEN PERMISSION