High-Performance 8-Bit Microcontrollers

Z8 Encore!® F0830 Series

Product Specification

PS025114-1314

Copyright ©2014 Zilog®, Inc. All rights reserved.
www.zilog.com

Warning: DO NOT USE THIS PRODUCT IN LIFE SUPPORT SYSTEMS.

LIFE SUPPORT POLICY

ZILOG'S PRODUCTS ARE NOT AUTHORIZED FOR USE AS CRITICAL COMPONENTS IN LIFE SUPPORT DEVICES OR SYSTEMS WITHOUT THE EXPRESS PRIOR WRITTEN APPROVAL OF THE PRESIDENT AND GENERAL COUNSEL OF ZILOG CORPORATION.

As used herein

Life support devices or systems are devices which (a) are intended for surgical implant into the body or (b) support or sustain life and whose failure to perform when properly used in accordance with instructions for use provided in the labeling can be reasonably expected to result in a significant injury to the user. A critical component is any component in a life support device or system whose failure to perform can be reasonably expected to cause the failure of the life support device or system or to affect its safety or effectiveness.

Document Disclaimer

©2014 Zilog, Inc. All rights reserved. Information in this publication concerning the devices, applications or technology described is intended to suggest possible uses and may be superseded. ZILOG, INC. DOES NOT ASSUME LIABILITY FOR OR PROVIDE A REPRESENTATION OF ACCURACY OF THE INFORMATION, DEVICES or TECHNOLOGY DESCRIBED IN THIS DOCUMENT. ZILOG ALSO DOES NOT ASSUME LIABILITY FOR INTELLECTUAL PROPERTY INFRINGEMENT RELATED IN ANY MANNER TO USE OF INFORMATION, DEVICES or TECHNOLOGY DESCRIBED HEREIN OR OTHERWISE. The information contained within this document has been verified according to the general principles of electrical and mechanical engineering.

Z8, Z8 Encore! and Z8 Encore! XP are trademarks or registered trademarks of Zilog, Inc. All other product or service names are the property of their respective owners.

Revision History

Each instance in this document's revision history reflects a change from its previous edition. For more details, refer to the corresponding page(s) or appropriate links furnished in the table below.

Date	Revision Level	Chapter/Section	Description	Page No.
May 2014	14	Electrical Characteristics	Corrected minimum ambient temperature under bias value from 0°C to –40°C, Table 115.	184
Dec 2012	13	GPIO	Modified GPIO Port D0 language in Shared Reset Pin section and Port Alternate Function Mapping table.	35, 36
Sep 2011	12	LED Drive Enable Register	Clarified statement surrounding the Alternate Function Register as it relates to the LED function; revised Sector Based Flash Protection description; revised Packaging chapter.	51, 115, 199
Dec 2007	11	n/a	Updated all instances of *Z8 Encore! XP F0830* to *Z8 Encore! F0830*.	All
Nov 2007	10	DC Characteristics, On-Chip Peripheral AC and DC Electrical Characteristics	Updated Tables 116 and and 122.	185, 193
Sep 2007	09	Timers, PWM SINGLE OUTPUT Mode, PWM DUAL OUTPUT Mode, Analog-to-Digital Converter, Reference Buffer.	Updated Figures 2 and 4, Table 4.	8, 9, 11, 68, 74, 75, 98, 101
Apr 2007	08	Optimizing NVDS Memory Usage for Execution Speed, On-Chip Peripheral AC and DC Electrical Characteristics	Added a note under Table 93 in Nonvolatile Data Storage chapter. Updated Table 121 and Table 122 in Electrical Characteristics chapter. Other style updates.	137, 193, 193

Date	Revision Level	Chapter/Section	Description	Page No.
Dec 2006	07	General Purpose Input/Output	Added PD0 in Table 16.	38
		Overview, Interrupt Controller	Changed the number of interrupts to 17.	1,5, 53
		Nonvolatile Data Storage	Updated chapter.	136
		Oscillator Control Register Definitions, AC Characteristics, On-Chip Peripheral AC and DC Electrical Characteristics	Updated Tables 117 and 122. Added Figure 24.	156, 189, 193
		Ordering Information	Updated Part Number Suffix Designations.	205
		n/a	Removed *Preliminary* stamp from footer.	All

Table of Contents

Revision History iii
List of Figures x
List of Tables xii
Overview 1
Features 1
Part Selection Guide 2
Block Diagram 3
CPU and Peripheral Overview 4
General Purpose Input/Output 4
Flash Controller 4
Nonvolatile Data Storage 5
Internal Precision Oscillator 5
External Crystal Oscillator 5
10-Bit Analog-to-Digital Converter 5
Analog Comparator 5
Timers 5
Interrupt Controller 5
Reset Controller 6
On-Chip Debugger 6
Acronyms and Expansions 6
Pin Description 7
Available Packages 7
Pin Configurations 7
Signal Descriptions 11
Pin Characteristics 13
Address Space 14
Register File 14
Program Memory 15
Data Memory 16
Flash Information Area 16
Register Map 17
Reset and Stop Mode Recovery 21
Reset Types 21
Reset Sources 23
Power-On Reset 23

Voltage Brown-Out Reset 24
Watchdog Timer Reset 25
External Reset Input 25
External Reset Indicator 26
On-Chip Debugger Initiated Reset 26
Stop Mode Recovery 26
Stop Mode Recovery using WDT Time-Out 27
Stop Mode Recovery using GPIO Port Pin Transition 27
Stop Mode Recovery Using the External RESET Pin 28
Debug Pin Driven Low 28
Reset Register Definitions 28

Low-Power Modes 30
Stop Mode 30
HALT Mode 31
Peripheral Level Power Control 31
Power Control Register Definitions 31

General Purpose Input/Output 33
GPIO Port Availability by Device 33
Architecture 34
GPIO Alternate Functions 34
Direct LED Drive 35
Shared Reset Pin 35
Crystal Oscillator Override 35
5V Tolerance 35
External Clock Setup 36
GPIO Interrupts 39
GPIO Control Register Definitions 39
Port A–D Address Registers 40
Port A–D Control Registers 41
Port A–D Data Direction Subregisters 41
Port A–D Alternate Function Subregisters 42
Port A–C Input Data Registers 49
Port A–D Output Data Register 50
LED Drive Enable Register 51
LED Drive Level High Register 51
LED Drive Level Low Register. 52

Interrupt Controller 53
Interrupt Vector Listing 53
Architecture 55
Operation 55

Master Interrupt Enable 55
Interrupt Vectors and Priority 56
Interrupt Assertion 56
Software Interrupt Assertion 57
Interrupt Control Register Definitions 57
Interrupt Request 0 Register 58
Interrupt Request 1 Register 59
Interrupt Request 2 Register 60
IRQ0 Enable High and Low Bit Registers 60
IRQ1 Enable High and Low Bit Registers 62
IRQ2 Enable High and Low Bit Registers 63
Interrupt Edge Select Register 65
Shared Interrupt Select Register 66
Interrupt Control Register 67

Timers 68
Architecture 68
Operation 69
Timer Operating Modes 69
Reading the Timer Count Values 82
Timer Pin Signal Operation 82
Timer Control Register Definitions 83
Timer 0–1 High and Low Byte Registers 83
Timer Reload High and Low Byte Registers 85
Timer 0–1 PWM High and Low Byte Registers 86
Timer 0–1 Control Registers 87

Watchdog Timer 92
Operation 92
Watchdog Timer Refresh 93
Watchdog Timer Time-Out Response 93
Watchdog Timer Reload Unlock Sequence 94
Watchdog Timer Control Register Definitions 95
Watchdog Timer Control Register 95
Watchdog Timer Reload Upper, High and Low Byte Registers 96

Analog-to-Digital Converter 98
Architecture 98
Operation 99
ADC Timing 100
ADC Interrupt 101
Reference Buffer 101
Internal Voltage Reference Generator 101

Calibration and Compensation 101
ADC Control Register Definitions 101
ADC Control Register 0 102
ADC Data High Byte Register 103
ADC Data Low Bits Register 103
Sample Settling Time Register 104
Sample Time Register 105

Comparator 106
Operation 106
Comparator Control Register Definitions 107

Flash Memory 108
Data Memory Address Space 111
Flash Information Area 111
Operation 112
Flash Operation Timing Using the Flash Frequency Registers 114
Flash Code Protection Against External Access 114
Flash Code Protection Against Accidental Program and Erasure 114
Byte Programming 116
Page Erase 117
Mass Erase 117
Flash Controller Bypass 117
Flash Controller Behavior in Debug Mode 117
NVDS Operational Requirements 118
Flash Control Register Definitions 118
Flash Control Register 119
Flash Status Register 120
Flash Page Select Register 121
Flash Sector Protect Register 122
Flash Frequency High and Low Byte Registers 123

Flash Option Bits 124
Operation 124
Option Bit Configuration by Reset 124
Option Bit Types 125
Flash Option Bit Control Register Definitions 126
Trim Bit Address Register 126
Trim Bit Data Register 126
Flash Option Bit Address Space 127
Trim Bit Address Space 129

Nonvolatile Data Storage 134

Operation 134
NVDS Code Interface 134
Byte Write 135
Byte Read 136
Power Failure Protection 137
Optimizing NVDS Memory Usage for Execution Speed 137

On-Chip Debugger 139
Architecture 139
Operation 140
OCD Interface 140
DEBUG Mode 141
OCD Data Format 142
OCD Autobaud Detector/Generator 142
OCD Serial Errors 143
Breakpoints 143
Runtime Counter 144
On-Chip Debugger Commands 144
On-Chip Debugger Control Register Definitions 148
OCD Control Register 148
OCD Status Register 150

Oscillator Control 151
Operation 151
System Clock Selection 151
Clock Failure Detection and Recovery 153
Oscillator Control Register Definitions 154

Crystal Oscillator 157
Operating Modes 157
Crystal Oscillator Operation 157
Oscillator Operation with an External RC Network 159

Internal Precision Oscillator 161
Operation 161

eZ8 CPU Instruction Set 162
Assembly Language Programming Introduction 162
Assembly Language Syntax 163
eZ8 CPU Instruction Notation 164
eZ8 CPU Instruction Classes 166
eZ8 CPU Instruction Summary 171

Op Code Maps 180

Electrical Characteristics 184
Absolute Maximum Ratings 184
DC Characteristics 185
AC Characteristics 189
On-Chip Peripheral AC and DC Electrical Characteristics 190
General Purpose I/O Port Input Data Sample Timing 195
General Purpose I/O Port Output Timing 196
On-Chip Debugger Timing 197

Packaging 199

Ordering Information 200
Part Number Suffix Designations 205

Appendix A. Register Tables 208
General Purpose RAM 208
Timer 0 208
Analog-to-Digital Converter 213
Low Power Control 216
LED Controller 216
Oscillator Control 217
Comparator 0 218
Interrupt Controller 218
GPIO Port A 222
Watchdog Timer 226
Trim Bit Control 228
Flash Memory Controller 228

Index 231

Customer Support 239

List of Figures

Figure 1. Z8 Encore! F0830 Series Block Diagram 3
Figure 2. Z8F0830 Series in 20-Pin SOIC, SSOP, PDIP Package 8
Figure 3. Z8F0830 Series in 28-Pin SOIC, SSOP, PDIP Package 8
Figure 4. Z8F0830 Series in 20-Pin QFN Package 9
Figure 5. Z8F0830 Series in 28-Pin QFN Package 10
Figure 6. Power-On Reset Operation 24
Figure 7. Voltage Brown-Out Reset Operation 25
Figure 8. GPIO Port Pin Block Diagram 34
Figure 9. Interrupt Controller Block Diagram 55
Figure 10. Timer Block Diagram 69
Figure 11. Analog-to-Digital Converter Block Diagram 99
Figure 12. ADC Timing Diagram 100
Figure 13. ADC Convert Timing 100
Figure 14. 1K Flash with NVDS 108
Figure 15. 2K Flash with NVDS 109
Figure 16. 4K Flash with NVDS 109
Figure 17. 8K Flash with NVDS 110
Figure 18. 12K Flash without NVDS 111
Figure 19. Flash Controller Operation Flow Chart 113
Figure 20. On-Chip Debugger Block Diagram 139
Figure 21. Interfacing the On-Chip Debugger's DBG Pin with an RS-232 Interface, #1 of 2 140
Figure 22. Interfacing the On-Chip Debugger's DBG Pin with an RS-232 Interface, #2 of 2 141
Figure 23. OCD Data Format 142
Figure 24. Oscillator Control Clock Switching Flow Chart 156
Figure 25. Recommended 20 MHz Crystal Oscillator Configuration 158
Figure 26. Connecting the On-Chip Oscillator to an External RC Network 159

Figure 27. Typical RC Oscillator Frequency as a Function of External Capacitance with a 45 kΩ Resistor 160
Figure 28. Op Code Map Cell Description 180
Figure 29. First Op Code Map 182
Figure 30. Second Op Code Map After 1Fh 183
Figure 31. I_{CC} Versus System Clock Frequency (HALT Mode) 187
Figure 32. I_{CC} Versus System Clock Frequency (Normal Mode) 188
Figure 33. Port Input Sample Timing 195
Figure 34. GPIO Port Output Timing 196
Figure 35. On-Chip Debugger Timing 197
Figure 36. Flash Current Diagram 198

List of Tables

Table 1. Z8 Encore! F0830 Series Family Part Selection Guide 2
Table 2. Acronyms and Expansions 6
Table 3. Z8 Encore! F0830 Series Package Options 7
Table 4. Signal Descriptions 11
Table 5. Pin Characteristics (20- and 28-pin Devices) 13
Table 6. Z8 Encore! F0830 Series Program Memory Maps 15
Table 7. Z8 Encore! F0830 Series Flash Memory Information Area Map 16
Table 8. Register File Address Map 17
Table 9. Reset and Stop Mode Recovery Characteristics and Latency 22
Table 10. Reset Sources and Resulting Reset Type 23
Table 11. Stop Mode Recovery Sources and Resulting Action 27
Table 12. POR Indicator Values 29
Table 13. Reset Status Register (RSTSTAT) 29
Table 14. Power Control Register 0 (PWRCTL0) 32
Table 15. Port Availability by Device and Package Type 33
Table 16. Port Alternate Function Mapping 36
Table 17. GPIO Port Registers and Subregisters 39
Table 18. Port A–D GPIO Address Registers (PxADDR) 40
Table 19. Port Control Subregister Access 40
Table 20. Port A–D Control Registers (PxCTL) 41
Table 21. Port A–D Data Direction Subregisters (PxDD) 41
Table 22. Port A–D Alternate Function Subregisters (PxAF) 42
Table 23. Port A–D Output Control Subregisters (PxOC) 43
Table 24. Port A–D High Drive Enable Subregisters (PxHDE) 44
Table 25. Port A–D Stop Mode Recovery Source Enable Subregisters (PxSMRE) . . 45
Table 26. Port A–D Pull-Up Enable Subregisters (PxPUE) 46
Table 27. Port A–D Alternate Function Set 1 Subregisters (PxAFS1) 47
Table 28. Port A–D Alternate Function Set 2 Subregisters (PxAFS2) 48

Table 29. Port A–C Input Data Registers (PxIN) 49
Table 30. Port A–D Output Data Register (PxOUT) 50
Table 31. LED Drive Enable (LEDEN) 51
Table 32. LED Drive Level High Register (LEDLVLH) 51
Table 33. LED Drive Level Low Register (LEDLVLL) 52
Table 34. Trap and Interrupt Vectors in Order of Priority 54
Table 35. Interrupt Request 0 Register (IRQ0) 58
Table 36. Interrupt Request 1 Register (IRQ1) 59
Table 37. Interrupt Request 2 Register (IRQ2) 60
Table 38. IRQ0 Enable and Priority Encoding 60
Table 39. IRQ0 Enable Low Bit Register (IRQ0ENL) 61
Table 40. IRQ0 Enable High Bit Register (IRQ0ENH) 61
Table 41. IRQ1 Enable and Priority Encoding 62
Table 42. IRQ1 Enable High Bit Register (IRQ1ENH) 62
Table 43. IRQ2 Enable and Priority Encoding 63
Table 44. IRQ1 Enable Low Bit Register (IRQ1ENL) 63
Table 45. IRQ2 Enable Low Bit Register (IRQ2ENL) 64
Table 46. IRQ2 Enable High Bit Register (IRQ2ENH) 64
Table 47. Interrupt Edge Select Register (IRQES) 65
Table 48. Shared Interrupt Select Register (IRQSS) 66
Table 49. Interrupt Control Register (IRQCTL) 67
Table 50. Timer 0–1 High Byte Register (TxH) 83
Table 51. Timer 0–1 Low Byte Register (TxL) 83
Table 52. Timer 0–1 Reload High Byte Register (TxRH) 85
Table 53. Timer 0–1 Reload Low Byte Register (TxRL) 85
Table 54. Timer 0–1 PWM High Byte Register (TxPWMH) 86
Table 55. Timer 0–1 PWM Low Byte Register (TxPWML) 86
Table 56. Timer 0–1 Control Register 0 (TxCTL0) 87
Table 57. Timer 0–1 Control Register 1 (TxCTL1) 88
Table 58. Watchdog Timer Approximate Time-Out Delays 92

Table 59. Watchdog Timer Control Register (WDTCTL) 95
Table 60. Watchdog Timer Reload Upper Byte Register (WDTU) 96
Table 61. Watchdog Timer Reload High Byte Register (WDTH) 96
Table 62. Watchdog Timer Reload Low Byte Register (WDTL) 97
Table 63. ADC Control Register 0 (ADCCTL0) 102
Table 64. ADC Data High Byte Register (ADCD_H) 103
Table 65. ADC Data Low Bits Register (ADCD_L) 103
Table 66. Sample Settling Time (ADCSST) 104
Table 67. Sample Time (ADCST) 105
Table 68. Comparator Control Register (CMP0) 107
Table 69. Z8 Encore! F0830 Series Flash Memory Configuration 108
Table 70. Z8F083 Flash Memory Area Map 112
Table 71. Flash Code Protection using the Flash Option Bits 115
Table 72. Flash Control Register (FCTL) 119
Table 73. Flash Status Register (FSTAT) 120
Table 74. Flash Page Select Register (FPS) 121
Table 75. Flash Sector Protect Register (FPROT) 122
Table 76. Flash Frequency High Byte Register (FFREQH) 123
Table 77. Flash Frequency Low Byte Register (FFREQL) 123
Table 78. Trim Bit Address Register (TRMADR) 126
Table 79. Trim Bit Address Map 126
Table 80. Trim Bit Data Register (TRMDR) 127
Table 81. Flash Option Bits at Program Memory Address `0000h` 127
Table 82. Flash Options Bits at Program Memory Address `0001h` 128
Table 83. Trim Option Bits at `0000h` (ADCREF) 130
Table 84. Trim Option Bits at `0001h` (TADC_COMP) 130
Table 85. Trim Bit Address Space 130
Table 86. Trim Option Bits at 0002h (TIPO) 131
Table 87. Trim Option Bits at 0003h (TVBO) 131
Table 88. VBO Trim Definition 132

Table 89. Trim Option Bits at 0006h (TCLKFLT) 132
Table 90. ClkFlt Delay Control Definition 133
Table 91. Write Status Byte 135
Table 92. Read Status Byte 136
Table 93. NVDS Read Time 137
Table 94. OCD Baud-Rate Limits 142
Table 95. On-Chip Debugger Command Summary 144
Table 96. OCD Control Register (OCDCTL) 149
Table 97. OCD Status Register (OCDSTAT) 150
Table 98. Oscillator Configuration and Selection 152
Table 99. Oscillator Control Register (OSCCTL) 154
Table 100. Recommended Crystal Oscillator Specifications 158
Table 101. Assembly Language Syntax Example 1 163
Table 102. Assembly Language Syntax Example 2 164
Table 103. Notational Shorthand 164
Table 104. Additional Symbols 165
Table 105. Arithmetic Instructions 166
Table 106. Bit Manipulation Instructions 167
Table 107. Block Transfer Instructions 167
Table 108. CPU Control Instructions 168
Table 109. Load Instructions 168
Table 110. Rotate and Shift Instructions 169
Table 111. Logical Instructions 169
Table 112. Program Control Instructions 169
Table 113. eZ8 CPU Instruction Summary 171
Table 114. Op Code Map Abbreviations 181
Table 115. Absolute Maximum Ratings 184
Table 116. DC Characteristics 185
Table 117. AC Characteristics 189
Table 118. Power-On Reset and Voltage Brown-Out Electrical Characteristics and Timing 190

Table 119. Flash Memory Electrical Characteristics and Timing 192
Table 120. Watchdog Timer Electrical Characteristics and Timing 192
Table 121. Nonvolatile Data Storage 193
Table 122. Analog-to-Digital Converter Electrical Characteristics and Timing 193
Table 123. Comparator Electrical Characteristics 194
Table 124. GPIO Port Input Timing 195
Table 125. GPIO Port Output Timing 196
Table 126. On-Chip Debugger Timing 197
Table 127. Power Consumption Reference Table 198
Table 128. Z8 Encore! XP F0830 Series Ordering Matrix 200
Table 129. Package and Pin Count Description 207
Table 130. Timer 0 High Byte Register (T0H) 208
Table 131. Timer 0 Low Byte Register (T0L) 209
Table 132. Timer 0 Reload High Byte Register (T0RH) 209
Table 133. Timer 0 Reload Low Byte Register (T0RL) 209
Table 134. Timer 0 PWM High Byte Register (T0PWMH) 209
Table 135. Timer 0 PWM Low Byte Register (T0PWML) 210
Table 136. Timer 0 Control Register 0 (T0CTL0) 210
Table 137. Timer 0 Control Register 1 (T0CTL1) 210
Table 138. Timer 1 High Byte Register (T1H) 210
Table 139. Timer 1 Low Byte Register (T1L) 211
Table 140. Timer 1 Reload High Byte Register (T1RH) 211
Table 141. Timer 1 Reload Low Byte Register (T1RL) 211
Table 142. Timer 1 PWM High Byte Register (T1PWMH) 211
Table 143. Timer 1 PWM Low Byte Register (T1PWML) 212
Table 144. Timer 1 Control Register 0 (T1CTL0) 212
Table 145. Timer 1 Control Register 1 (T1CTL1) 212
Table 146. ADC Control Register 0 (ADCCTL0) 213
Table 147. ADC Data High Byte Register (ADCD_H) 214
Table 148. ADC Data Low Bits Register (ADCD_L) 214

Table 149. ADC Sample Settling Time (ADCSST) 215
Table 150. ADC Sample Time (ADCST) 215
Table 151. Power Control Register 0 (PWRCTL0) 216
Table 152. LED Drive Enable (LEDEN) 216
Table 153. LED Drive Level High Register (LEDLVLH) 217
Table 154. LED Drive Level Low Register (LEDLVLL) 217
Table 155. Oscillator Control Register (OSCCTL) 217
Table 156. Comparator Control Register (CMP0) 218
Table 157. Interrupt Request 0 Register (IRQ0) 218
Table 158. IRQ0 Enable High Bit Register (IRQ0ENH) 219
Table 159. IRQ0 Enable Low Bit Register (IRQ0ENL) 219
Table 160. Interrupt Request 1 Register (IRQ1) 219
Table 161. IRQ1 Enable High Bit Register (IRQ1ENH) 219
Table 162. IRQ1 Enable Low Bit Register (IRQ1ENL) 220
Table 163. Interrupt Request 2 Register (IRQ2) 220
Table 164. IRQ2 Enable High Bit Register (IRQ2ENH) 220
Table 165. IRQ2 Enable Low Bit Register (IRQ2ENL) 220
Table 166. Interrupt Edge Select Register (IRQES) 221
Table 167. Shared Interrupt Select Register (IRQSS) 221
Table 168. Interrupt Control Register (IRQCTL) 221
Table 169. Port A GPIO Address Register (PAADDR) 222
Table 170. Port A Control Registers (PACTL) 222
Table 171. Port A Input Data Registers (PAIN) 222
Table 172. Port A Output Data Register (PAOUT) 223
Table 173. Port B GPIO Address Register (PBADDR) 223
Table 174. Port B Control Registers (PBCTL) 223
Table 175. Port B Input Data Registers (PBIN) 223
Table 176. Port B Output Data Register (PBOUT) 224
Table 177. Port C GPIO Address Register (PCADDR) 224
Table 178. Port C Control Registers (PCCTL) 224

Table 179. Port C Input Data Registers (PCIN) 224
Table 180. Port C Output Data Register (PCOUT) 225
Table 181. Port D GPIO Address Register (PDADDR) 225
Table 182. Port D Control Registers (PDCTL) 225
Table 183. Port D Output Data Register (PDOUT) 226
Table 184. Watchdog Timer Control Register (WDTCTL) 226
Table 185. Reset Status Register (RSTSTAT) 226
Table 186. Watchdog Timer Reload Upper Byte Register (WDTU) 227
Table 187. Watchdog Timer Reload High Byte Register (WDTH) 227
Table 188. Watchdog Timer Reload Low Byte Register (WDTL) 227
Table 189. Trim Bit Address Register (TRMADR) 228
Table 190. Trim Bit Data Register (TRMDR) 228
Table 191. Flash Control Register (FCTL) 228
Table 192. Flash Status Register (FSTAT) 229
Table 193. Flash Page Select Register (FPS) 229
Table 194. Flash Sector Protect Register (FPROT) 229
Table 195. Flash Frequency High Byte Register (FFREQH) 229
Table 196. Flash Frequency Low Byte Register (FFREQL) 230

Overview

Zilog's Z8 Encore! MCU family of products are the first in a line of Zilog microcontroller products based on the 8-bit eZ8 CPU. The Z8 Encore! F0830 Series products expand on Zilog's extensive line of 8-bit microcontrollers. The Flash in-circuit programming capability allows for faster development time and program changes in the field. The new eZ8 CPU is upward-compatible with existing Z8 CPU instructions. The rich peripheral set of Z8 Encore! F0830 Series makes it suitable for a variety of applications including motor control, security systems, home appliances, personal electronic devices and sensors.

Features

The key features of Z8 Encore! F0830 Series MCU include:

- 20 MHz eZ8 CPU
- Up to 12 KB Flash memory with in-circuit programming capability
- Up to 256 B register RAM
- 64 B Nonvolatile Data Storage (NVDS)
- Up to 25 I/O pins depending upon package
- Internal Precision Oscillator (IPO)
- External crystal oscillator
- Two enhanced 16-bit timers with capture, compare and PWM capability
- Watchdog Timer (WDT) with dedicated internal RC oscillator
- Single-pin, On-Chip Debugger (OCD)
- Optional 8-channel, 10-bit Analog-to-Digital Converter (ADC)
- On-chip analog comparator
- Up to 17 interrupt sources
- Voltage Brown-Out (VBO) protection
- Power-On Reset (POR)
- 2.7 V to 3.6 V operating voltage
- Up to thirteen 5 V-tolerant input pins
- 20- and 28-pin packages
- 0°C to +70°C standard temperature range and –40°C to +105°C extended temperature operating ranges

Part Selection Guide

Table 1 lists the basic features available for each device within the Z8 Encore! F0830 Series product line. See the Ordering Information chapter on page 200 for details.

Table 1. Z8 Encore! F0830 Series Family Part Selection Guide

Part Number	Flash (KB)	RAM (B)	NVDS (64B)	ADC
Z8F1232	12	256	No	Yes
Z8F1233	12	256	No	No
Z8F0830	8	256	Yes	Yes
Z8F0831	8	256	Yes	No
Z8F0430	4	256	Yes	Yes
Z8F0431	4	256	Yes	No
Z8F0230	2	256	Yes	Yes
Z8F0231	2	256	Yes	No
Z8F0130	1	256	Yes	Yes
Z8F0131	1	256	Yes	No

Block Diagram

Figure 1 displays a block diagram of the Z8 Encore! F0830 Series architecture.

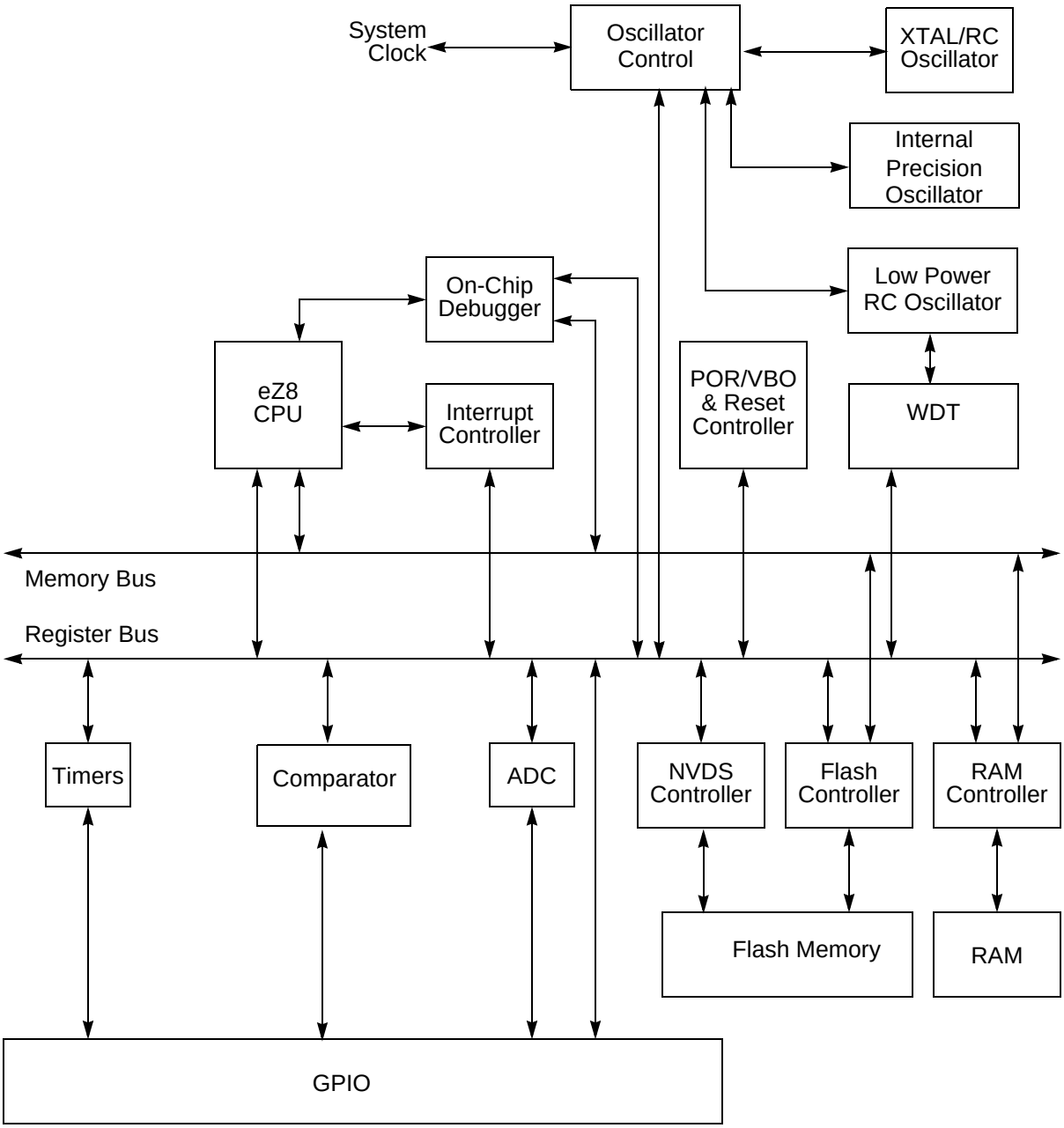

Figure 1. Z8 Encore! F0830 Series Block Diagram

CPU and Peripheral Overview

The eZ8 CPU, Zilog's latest 8-bit CPU, meets the continuing demand for faster and more code-efficient microcontrollers. The eZ8 CPU executes a superset of the original Z8 instruction set. The eZ8 CPU features include:

- Direct register-to-register architecture allows each register to function as an accumulator, improving execution time and decreasing the required program memory
- Software stack allows much greater depth in subroutine calls and interrupts than hardware stacks
- Compatible with existing Z8 CPU code
- Expanded internal register file allows access up to 4KB
- New instructions improve execution efficiency for code developed using high-level programming languages, including C
- Pipelined instruction fetch and execution
- New instructions for improved performance including BIT, BSWAP, BTJ, CPC, LDC, LDCI, LEA, MULT and SRL
- New instructions support 12-bit linear addressing of the register file
- Up to 10 MIPS operation
- C Compiler-friendly
- 2 to 9 clock cycles per instruction

For more information about the eZ8 CPU, refer to the eZ8 CPU Core User Manual (UM0128), which is available for download on www.zilog.com.

General Purpose Input/Output

The Z8 Encore! F0830 Series features up to 25 port pins (Ports A–D) for general-purpose input/output (GPIO). The number of GPIO pins available is a function of package. Each pin is individually programmable.

Flash Controller

The Flash Controller programs and erases the Flash memory. It also supports protection against accidental programming and erasure.

Nonvolatile Data Storage

The Nonvolatile Data Storage (NVDS) function uses a hybrid hardware/software scheme to implement a byte-programmable data memory and is capable of storing about 100,000 write cycles.

Internal Precision Oscillator

The Internal Precision Oscillator (IPO) function, with an accuracy of ±4% full voltage/ temperature range, is a trimmable clock source that requires no external components.

External Crystal Oscillator

The crystal oscillator circuit provides highly accurate clock frequencies using an external crystal, ceramic resonator or RC network.

10-Bit Analog-to-Digital Converter

The optional Analog-to-Digital Converter (ADC) converts an analog input signal to a 10-bit binary number. The ADC accepts inputs from eight different analog input pins.

Analog Comparator

The analog comparator compares the signal at an input pin with either an internal programmable reference voltage or with a signal at the second input pin. The comparator output is used either to drive a logic output pin or to generate an interrupt.

Timers

Two enhanced 16-bit reloadable timers can be used for timing/counting events or for motor control operations. These timers provide a 16-bit programmable reload counter and operate in ONE-SHOT, CONTINUOUS, GATED, CAPTURE, CAPTURE RESTART, COMPARE, CAPTURE and COMPARE, PWM SINGLE OUTPUT and PWM DUAL OUTPUT Modes.

Interrupt Controller

The Z8 Encore! F0830 Series products support seventeen interrupt sources with sixteen interrupt vectors: up to five internal peripheral interrupts and up to twelve GPIO interrupts. These interrupts have three levels of programmable interrupt priority.

Reset Controller

The Z8 Encore! F0830 Series products are reset using any one of the following: the $\overline{\text{RESET}}$ pin, Power-On Reset, Watchdog Timer (WDT) time-out, Stop Mode exit or Voltage Brown-Out (VBO) warning signal. The $\overline{\text{RESET}}$ pin is bidirectional; i.e., it functions as a reset source as well as a reset indicator.

On-Chip Debugger

The Z8 Encore! F0830 Series products feature an integrated On-Chip Debugger (OCD). The OCD provides a rich set of debugging capabilities, such as reading and writing registers, programming Flash memory, setting breakpoints and executing code. The OCD uses one single-pin interface for communication with an external host.

Acronyms and Expansions

This document references a number of acronyms; each is expanded in Table 2 for the reader's understanding.

Table 2. Acronyms and Expansions

Acronyms	Expansions
ADC	Analog-to-Digital Converter
NVDS	Nonvolatile Data Storage
WDT	Watchdog Timer
GPIO	General-Purpose Input/Output
OCD	On-Chip Debugger
POR	Power-On Reset
VBO	Voltage Brown-Out
IPO	Internal Precision Oscillator
PDIP	Plastic Dual Inline Package
SOIC	Small Outline Integrated Circuit
SSOP	Small Shrink Outline Package
QFN	Quad Flat No Lead
IRQ	Interrupt request
ISR	Interrupt service routine
MSB	Most significant byte
LSB	Least significant byte
PWM	Pulse Width Modulation
SAR	Successive Approximation Regis-

Pin Description

The Z8 Encore! F0830 Series products are available in a variety of package styles and pin configurations. This chapter describes the signals and the pin configurations for each of the package styles. For information about the physical package specifications, see the Packaging chapter on page 199.

Available Packages

Table 3 lists the package styles that are available for each device in the Z8 Encore! F0830 Series product line.

Table 3. Z8 Encore! F0830 Series Package Options

Part Number	ADC	20-pin QFN	20-pin SOIC	20-pin SSOP	20-pin PDIP	28-pin QFN	28-pin SOIC	28-pin SSOP	28-pin PDIP
Z8F1232	Yes	X	X	X	X	X	X	X	X
Z8F1233	No	X	X	X	X	X	X	X	X
Z8F0830	Yes	X	X	X	X	X	X	X	X
Z8F0831	No	X	X	X	X	X	X	X	X
Z8F0430	Yes	X	X	X	X	X	X	X	X
Z8F0431	No	X	X	X	X	X	X	X	X
Z8F0230	Yes	X	X	X	X	X	X	X	X
Z8F0231	No	X	X	X	X	X	X	X	X
Z8F0130	Yes	X	X	X	X	X	X	X	X
Z8F0131	No	X	X	X	X	X	X	X	X

Pin Configurations

Figures 2 and 3 display the pin configurations of all of the packages available in the Z8 Encore! F0830 Series. See Table 4 on page 11 for a description of the signals. Analog input alternate functions (ANAx) are not available on the following devices:

- Z8F0831
- Z8F0431
- Z8F0131
- Z8F0231
- Z8F1233

The analog supply pins (AV_{DD} and AV_{SS}) are also not available on these parts and are replaced by PB6 and PB7.

At reset, by default, all pins of Port A, B and C are in Input state. The alternate functionality is also disabled, so the pins function as general purpose input ports until programmed otherwise. At power-up, the Port D0 pin defaults to the $\overline{RESET}$ Alternate function.

The pin configurations listed are preliminary and subject to change based on manufacturing limitations.

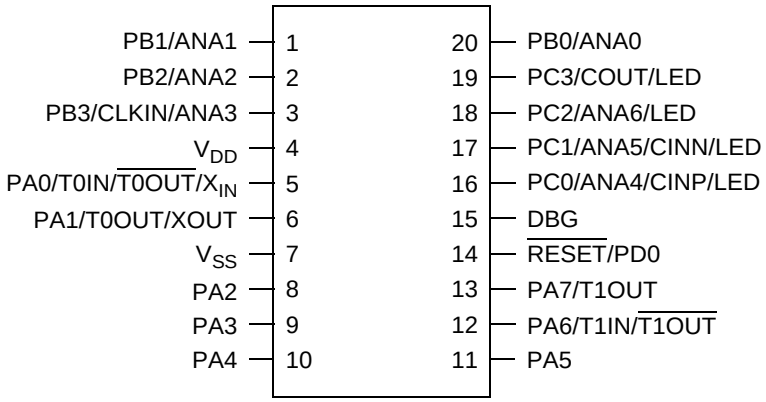

Figure 2. Z8F0830 Series in 20-Pin SOIC, SSOP, PDIP Package

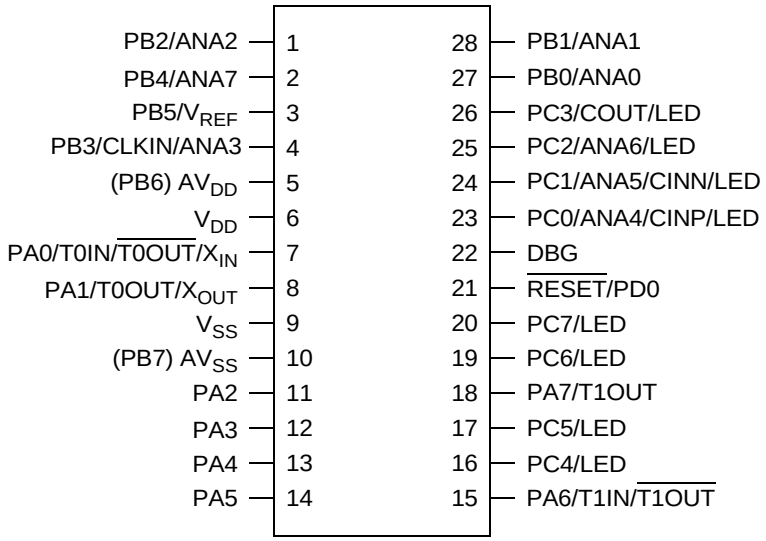

Figure 3. Z8F0830 Series in 28-Pin SOIC, SSOP, PDIP Package

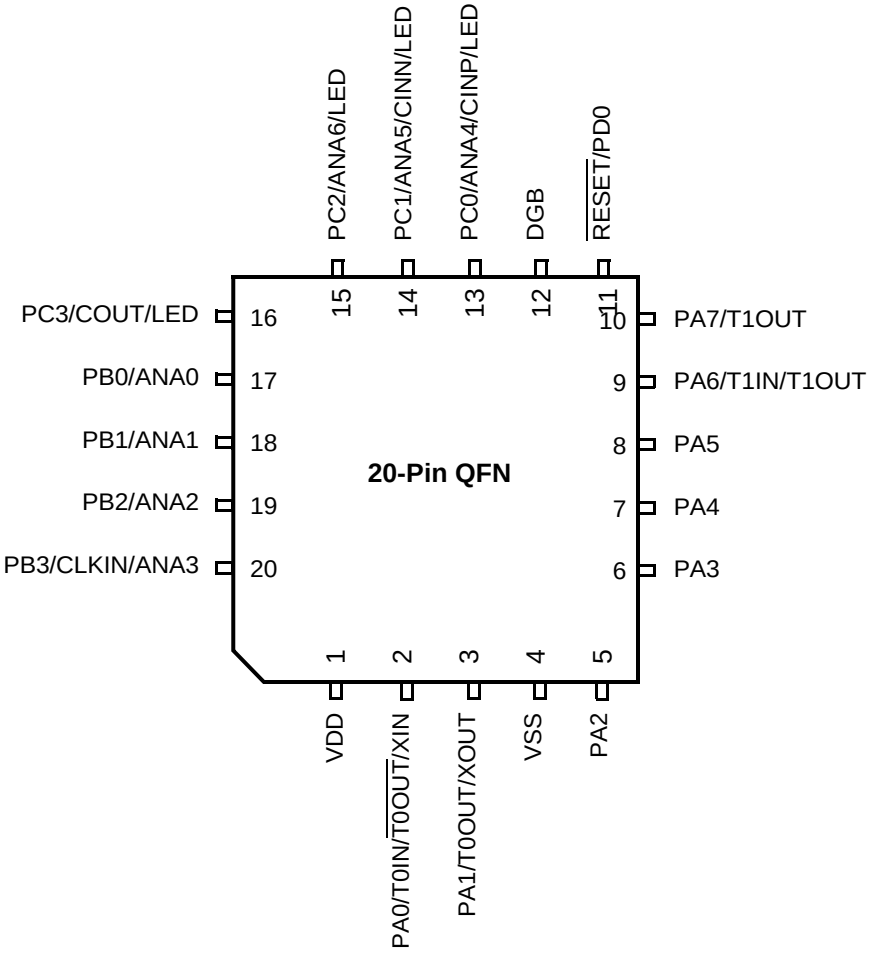

Figure 4. Z8F0830 Series in 20-Pin QFN Package

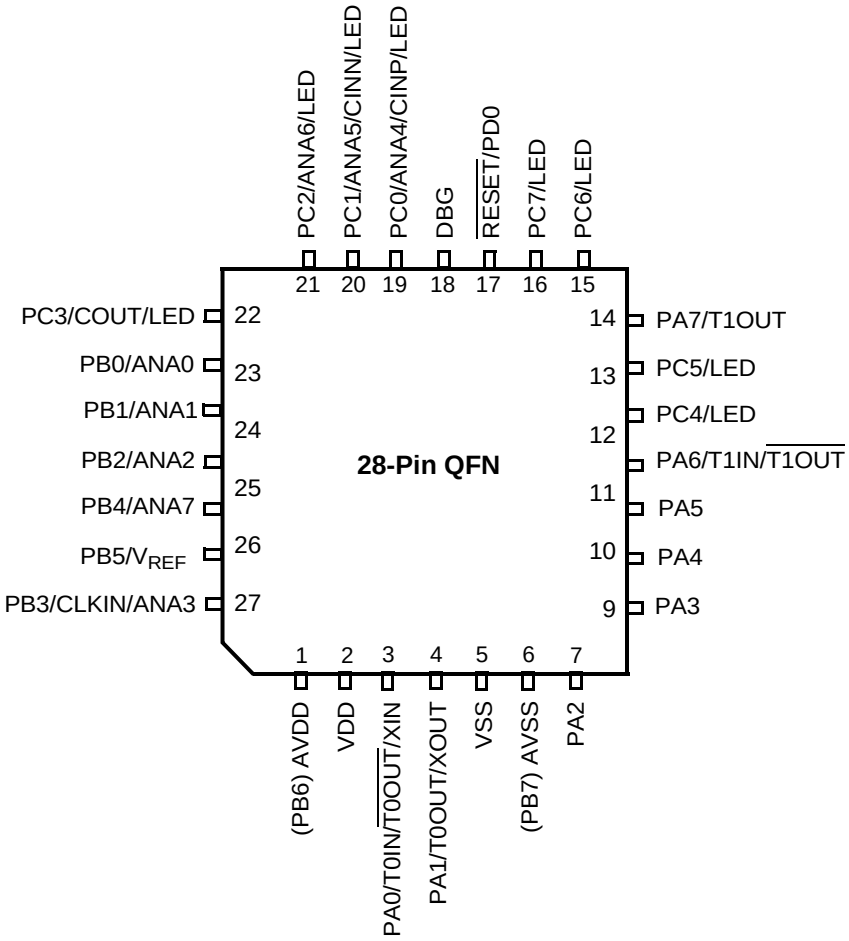

Figure 5. Z8F0830 Series in 28-Pin QFN Package

Signal Descriptions

Table 4 describes the Z8 Encore! F0830 Series signals. See the Pin Configurations section on page 7 to determine the signals available for each specific package style.

Table 4. Signal Descriptions

Signal Mnemonic	I/O	Description
General-Purpose I/O Ports A–D		
PA[7:0]	I/O	Port A. These pins are used for general purpose I/O.
PB[7:0]	I/O	Port B. These pins are used for general purpose I/O. PB6 and PB7 are available only in those devices without an ADC.
PC[7:0]	I/O	Port C. These pins are used for general purpose I/O.
PD[0]	I/O	Port D. This pin is used for general purpose output only.
Note: PB6 and PB7 are only available in 28-pin packages without ADC. In 28-pin packages with ADC, they are replaced by AV_{DD} and AV_{SS}.		
Timers		
T0OUT/T1OUT	O	Timer output 0–1. These signals are the output from the timers.
$\overline{T0OUT}$/$\overline{T1OUT}$	O	Timer complement output 0–1. These signals are output from the timers in PWM DUAL OUTPUT Mode.
T0IN/T1IN	I	Timer Input 0–1. These signals are used as the capture, gating and counter inputs. The T0IN signal is multiplexed $\overline{T0OUT}$ signals.
Comparator		
CINP/CINN	I	Comparator inputs. These signals are the positive and negative inputs to the comparator.
COUT	O	Comparator output. This is the output of the comparator.
Analog		
ANA[7:0]	I	Analog port. These signals are used as inputs to the analog-to-digital converter (ADC).
V_{REF}	I/O	Analog-to-digital converter reference voltage input. **Note:** When configuring ADC using external V_{REF}, PB5 is used as V_{REF} in 28-pin package.
Note: The AV_{DD} and AV_{SS} signals are available only in the 28-pin packages with ADC. They are replaced by PB6 and PB7 on 28-pin packages without ADC.		

Table 4. Signal Descriptions (Continued)

Signal Mnemonic	I/O	Description
Oscillators		
X_{IN}	I	External crystal input. This is the input pin to the crystal oscillator. A crystal can be connected between it and the **XOUT** pin to form the oscillator. In addition, this pin is used with external RC networks or external clock drivers to provide the system clock.
X_{OUT}	O	External crystal output. This pin is the output of the crystal oscillator. A crystal can be connected between it and the **XIN** pin to form the oscillator.
Clock Input		
CLK_{IN}	I	Clock input signal. This pin may be used to input a TTL-level signal to be used as the system clock.
LED Drivers		
LED	O	Direct LED drive capability. All Port C pins have the capability to drive an LED without any other external components. These pins have programmable drive strengths set by the GPIO block.
On-Chip Debugger		
DBG	I/O	Debug. This signal is the control and data input and output to and from the On-Chip Debugger. **Caution:** The DBG pin is open-drain and requires an external pull-up resistor to ensure proper operation.
Reset		
$\overline{RESET}$	I/O	RESET. Generates a reset when asserted (driven Low). Also serves as a reset indicator; the Z8 Encore! forces this pin low when in reset. This pin is open-drain and features an enabled internal pull-up resistor.
Power Supply		
V_{DD}	I	Digital power supply.
AV_{DD}	I	Analog power supply.
V_{SS}	I	Digital ground.
AV_{SS}	I	Analog ground.

Note: The AV_{DD} and AV_{SS} signals are available only in the 28-pin packages with ADC. They are replaced by PB6 and PB7 on 28-pin packages without ADC.

Pin Characteristics

Table 5 provides detailed characteristics of each pin available on the Z8 Encore! F0830 Series 20- and 28-pin devices. Data in Table 5 are sorted alphabetically by the pin symbol mnemonic.

Table 5. Pin Characteristics (20- and 28-pin Devices)

Symbol Mnemonic	Direction	Reset Direction	Active Low or Active High	Tristate Output	Internal Pull-Up or Pull-Down	Schmitt-Trigger Input	Open Drain Output	5V Tolerance
AV_{DD}	N/A	N/A	N/A	N/A	N/A	N/A	N/A	N/A
AV_{SS}	N/A	N/A	N/A	N/A	N/A	N/A	N/A	NA
DBG	I/O	I	N/A	Yes	No	Yes	Yes	Yes
PA[7:0]	I/O	I	N/A	Yes	Programmable pull-up	Yes	Yes, Programmable	PA[7:2] only
PB[7:0]	I/O	I	N/A	Yes	Programmable pull-up	Yes	Yes, Programmable	PB[7:6] only
PC[7:0]	I/O	I	N/A	Yes	Programmable pull-up	Yes	Yes, Programmable	PC[7:3] only
RESET/PD0	I/O	I/O (defaults to $\overline{\text{RESET}}$)	Low (in RESET mode)	Yes (PD0 only)	Programmable for PD0; always on for $\overline{\text{RESET}}$	Yes	Programmable for PD0; always on for $\overline{\text{RESET}}$	Yes
V_{DD}	N/A	N/A	N/A	N/A			N/A	N/A
V_{SS}	N/A	N/A	N/A	N/A			N/A	N/A

Note: PB6 and PB7 are available only in devices without an ADC function.

Address Space

The eZ8 CPU can access the following three distinct address spaces:

- The register file addresses access for the general purpose registers and the eZ8 CPU, peripheral and general purpose I/O port control registers
- The program memory addresses access for all of the memory locations having executable code and/or data
- The data memory addresses access for all of the memory locations containing only the data

The following sections describe these three address spaces. For more information about the eZ8 CPU and its address space, refer to the eZ8 CPU Core User Manual (UM0128), which is available for download at www.zilog.com.

Register File

The register file address space in the Z8 Encore! MCU is 4KB (4096 bytes). The register file consists of two sections: control registers and general-purpose registers. When instructions are executed, registers defined as *source* are read and registers defined as *destinations* are written. The architecture of the eZ8 CPU allows all general purpose registers to function as accumulators, address pointers, index registers, stack areas or scratch pad memory.

The upper 256 bytes of the 4KB register file address space are reserved for controlling the eZ8 CPU, on-chip peripherals and the I/O ports. These registers are located at addresses from `F00h` to `FFFh`. Some of the addresses within the 256B Control Register section are reserved (unavailable). Reading from a reserved register file address returns an undefined value. Writing to reserved register file addresses is not recommended and can produce unpredictable results.

The on-chip RAM always begins at address `000h` in the register file address space. The Z8 Encore! F0830 Series devices contain up to 256B of on-chip RAM. Reading from register file addresses outside the available RAM addresses (and not within the Control Register address space), returns an undefined value. Writing to these register file addresses has no effect.

Program Memory

The eZ8 CPU supports 64KB of program memory address space. The Z8 Encore! F0830 Series devices contain 1KB to 12KB of on-chip Flash memory in the program memory address space, depending on the device. Reading from program memory addresses outside the available Flash memory address range returns FFh. Writing to these unimplemented program memory addresses produces no effect. Table 6 shows a program memory map for the Z8 Encore! F0830 Series products.

Table 6. Z8 Encore! F0830 Series Program Memory Maps

Program Memory Address (Hex)	Function
Z8F0830 and Z8F0831 Products	
0000–0001	Flash Option Bits
0002–0003	Reset Vector
0004–003D	Interrupt Vectors*
003E–1FFF	Program Memory
Z8F0430 and Z8F0431 Products	
0000–0001	Flash Option Bits
0002–0003	Reset Vector
0004–003D	Interrupt Vectors*
003E–0FFF	Program Memory
Z8F0130 and Z8F0131 Products	
0000–0001	Flash Option Bits
0002–0003	Reset Vector
0004–003D	Interrupt Vectors*
003E–03FF	Program Memory
Z8F0230 and Z8F0231 Products	
0000–0001	Flash Option Bits
0002–0003	Reset Vector
0004–003D	Interrupt Vectors*
003E–07FF	Program Memory

Note: *See Table 34 on page 54 for a list of interrupt vectors.

Data Memory

The Z8 Encore! F0830 Series does not use the eZ8 CPU's 64KB data memory address space.

Flash Information Area

Table 7 maps the Z8 Encore! F0830 Series Flash information area. The 128-byte information area is accessed, by setting bit 7 of the Flash Page Select Register to 1. When access is enabled, the Flash information area is mapped into program memory and overlays these 128 bytes at addresses `FE00h` to `FE7Fh`. When information area access is enabled, all reads from these program memory addresses return information area data rather than program memory data. Access to the Flash information area is read-only.

Table 7. Z8 Encore! F0830 Series Flash Memory Information Area Map

Program Memory Address (Hex)	Function
FE00–FE3F	Zilog option bits
FE40–FE53	Part Number 20-character ASCII alphanumeric code Left-justified and filled with Fh
FE54–FE5F	Reserved
FE60–FE7F	Reserved
FE80–FFFF	Reserved

Register Map

Table 8 provides an address map of the Z8 Encore! F0830 Series register file. Not all devices and package styles in the Z8 Encore! F0830 Series support the ADC or all of the GPIO ports. Consider registers for unimplemented peripherals as reserved.

Table 8. Register File Address Map

Address (Hex)	Register Description	Mnemonic	Reset (Hex)	Page No.
General Purpose RAM				
000–0FF	General purpose register file RAM	—	XX	
100–EFF	Reserved	—	XX	
Timer 0				
F00	Timer 0 high byte	T0H	00	83
F01	Timer 0 low byte	T0L	01	83
F02	Timer 0 reload high byte	T0RH	FF	85
F03	Timer 0 reload low byte	T0RL	FF	85
F04	Timer 0 PWM high byte	T0PWMH	00	86
F05	Timer 0 PWM low byte	T0PWML	00	86
F06	Timer 0 control 0	T0CTL0	00	87
F07	Timer 0 control 1	T0CTL1	00	88
Timer 1				
F08	Timer 1 high byte	T1H	00	83
F09	Timer 1 low byte	T1L	01	83
F0A	Timer 1 reload high byte	T1RH	FF	85
F0B	Timer 1 reload low byte	T1RL	FF	85
F0C	Timer 1 PWM high byte	T1PWMH	00	86
F0D	Timer 1 PWM low byte	T1PWML	00	86
F0E	Timer 1 control 0	T1CTL0	00	87
F0F	Timer 1 control 1	T1CTL1	00	83
F10–F6F	Reserved	—	XX	
Analog-to-Digital Converter (ADC)				
F70	ADC control 0	ADCCTL0	00	102
F71	Reserved	—	XX	
F72	ADC data high byte	ADCD_H	XX	103

Note: XX = Undefined.

Table 8. Register File Address Map (Continued)

Address (Hex)	Register Description	Mnemonic	Reset (Hex)	Page No.
Analog-to-Digital Converter (ADC, cont'd)				
F73	ADC data low bits	ADCD_L	XX	103
F74	ADC sample settling time	ADCSST	0F	104
F75	ADC sample time	ADCST	3F	105
F76	Reserved	—	XX	
F77–F7F	Reserved	—	XX	
Low Power Control				
F80	Power control 0	PWRCTL0	88	32
F81	Reserved	—	XX	
LED Controller				
F82	LED drive enable	LEDEN	00	51
F83	LED drive level high	LEDLVLH	00	51
F84	LED drive level low	LEDLVLL	00	52
F85	Reserved	—	XX	
Oscillator Control				
F86	Oscillator control	OSCCTL	A0	154
F87–F8F	Reserved	—	XX	
Comparator 0				
F90	Comparator 0 control	CMP0	14	107
F91–FBF	Reserved	—	XX	
Interrupt Controller				
FC0	Interrupt request 0	IRQ0	00	58
FC1	IRQ0 enable high bit	IRQ0ENH	00	61
FC2	IRQ0 enable low Bit	IRQ0ENL	00	61
FC3	Interrupt request 1	IRQ1	00	59
FC4	IRQ1 enable high bit	IRQ1ENH	00	62
FC5	IRQ1 enable low bit	IRQ1ENL	00	63
FC6	Interrupt request 2	IRQ2	00	60
FC7	IRQ2 enable high bit	IRQ2ENH	00	64
FC8	IRQ2 enable low bit	IRQ2ENL	00	64
FC9–FCC	Reserved	—	XX	
FCD	Interrupt edge select	IRQES	00	66

Note: XX = Undefined.

Table 8. Register File Address Map (Continued)

Address (Hex)	Register Description	Mnemonic	Reset (Hex)	Page No.
Interrupt Controller (cont'd)				
FCE	Shared interrupt select	IRQSS	00	66
FCF	Interrupt control	IRQCTL	00	67
GPIO Port A				
FD0	Port A address	PAADDR	00	39
FD1	Port A control	PACTL	00	41
FD2	Port A input data	PAIN	XX	41
FD3	Port A output data	PAOUT	00	41
GPIO Port B				
FD4	Port B address	PBADDR	00	39
FD5	Port B control	PBCTL	00	41
FD6	Port B input data	PBIN	XX	41
FD7	Port B output data	PBOUT	00	41
GPIO Port C				
FD8	Port C address	PCADDR	00	39
FD9	Port C control	PCCTL	00	41
FDA	Port C input data	PCIN	XX	41
FDB	Port C output data	PCOUT	00	41
GPIO Port D				
FDC	Port D address	PDADDR	00	39
FDD	Port D control	PDCTL	00	41
FDE	Reserved	—	XX	
FDF	Port D output data	PDOUT	00	41
FE0–FEF	Reserved	—	XX	
Watchdog Timer (WDT)				
FF0	Reset status	RSTSTAT	XX	95
	Watchdog Timer control	WDTCTL	XX	95
FF1	Watchdog Timer reload upper byte	WDTU	FF	96
FF2	Watchdog Timer reload high byte	WDTH	FF	96
FF3	Watchdog Timer reload low byte	WDTL	FF	97
FF4–FF5	Reserved	—	XX	

Note: XX = Undefined.

Table 8. Register File Address Map (Continued)

Address (Hex)	Register Description	Mnemonic	Reset (Hex)	Page No.
Trim Bit Control				
FF6	Trim bit address	TRMADR	00	126
FF7	Trim data	TRMDR	XX	127
Flash Memory Controller				
FF8	Flash control	FCTL	00	119
FF8	Flash status	FSTAT	00	120
FF9	Flash page select	FPS	00	121
	Flash sector protect	FPROT	00	122
FFA	Flash programming frequency high byte	FFREQH	00	123
FFB	Flash programming frequency low byte	FFREQL	00	123
eZ8 CPU				
FFC	Flags	—	XX	Refer to the eZ8 CPU Core User Manual (UM0128)
FFD	Register pointer	RP	XX	
FFE	Stack pointer high byte	SPH	XX	
FFF	Stack pointer low byte	SPL	XX	

Note: XX = Undefined.

Reset and Stop Mode Recovery

The reset controller in the Z8 Encore! F0830 Series controls RESET and Stop Mode Recovery operations. In a typical operation, the following events can cause a reset:

- Power-On Reset (POR)
- Voltage Brown-Out (VBO)
- Watchdog Timer time-out (when configured by the WDT_RES Flash option bit to initiate a reset)
- External $\overline{\text{RESET}}$ pin assertion (when the alternate RESET function is enabled by the GPIO register)
- On-Chip Debugger initiated reset (OCDCTL[0] set to 1)

When the device is in Stop Mode, a Stop Mode Recovery event is initiated by either of the following occurrences:

- A Watchdog Timer time-out
- A GPIO port input pin transition on an enabled Stop Mode Recovery source

The VBO circuitry on the device generates a VBO reset when the supply voltage drops below a minimum safe level.

Reset Types

The Z8 Encore! F0830 Series provides different types of Reset operations. Stop Mode Recovery is considered a form of reset. Table 9 lists the types of resets and their operating characteristics. The duration of a system reset is longer if the external crystal oscillator is enabled by the Flash option bits; the result is additional time for oscillator startup.

Table 9. Reset and Stop Mode Recovery Characteristics and Latency

	Reset Characteristics and Latency		
Reset Type	**Control Registers**	**eZ8 CPU**	**Reset Latency (Delay)**
System Reset	Reset (as applicable)	Reset	About 66 Internal Precision Oscillator Cycles
System Reset with Crystal Oscillator Enabled	Reset (as applicable)	Reset	About 5000 Internal Precision Oscillator Cycles
Stop Mode Recovery	Unaffected, except WDT_CTL and OSC_CTL registers	Reset	About 66 Internal Precision Oscillator cycles
Stop Mode Recovery with crystal oscillator enabled	Unaffected, except WDT_CTL and OSC_CTL registers	Reset	About 5000 Internal Precision Oscillator cycles

During a system RESET or Stop Mode Recovery, the Z8 Encore! F0830 Series device is held in reset for about 66 cycles of the Internal Precision Oscillator. If the crystal oscillator is enabled in the Flash option bits, the reset period is increased to about 5000 IPO cycles. When a reset occurs because of a low voltage condition or Power-On Reset, the reset delay is measured from the time that the supply voltage first exceeds the POR level (discussed later in this chapter). If the external pin reset remains asserted at the end of the reset period, the device remains in reset until the pin is deasserted.

At the beginning of reset, all GPIO pins are configured as inputs with pull-up resistor disabled, except PD0 which is shared with the reset pin. On reset, the Port D0 pin is configured as a bidirectional open-drain reset. This pin is internally driven low during port reset, after which the user code may reconfigure this pin as a general purpose output.

During reset, the eZ8 CPU and on-chip peripherals are idle; however, the on-chip crystal oscillator and Watchdog Timer Oscillator continues to run.

On reset, control registers within the register file that have a defined reset value are loaded with their reset values. Other control registers (including the Stack Pointer, Register Pointer and Flags) and general purpose RAM are undefined following the reset. The eZ8 CPU fetches the reset vector at program memory addresses `0002h` and `0003h` and loads that value into the program counter. Program execution begins at the reset vector address.

Because the control registers are reinitialized by a system reset, the system clock after reset is always the IPO. User software must reconfigure the oscillator control block, to enable and select the correct system clock source.

Reset Sources

Table 10 lists the possible sources of a system reset.

Table 10. Reset Sources and Resulting Reset Type

Operating Mode	Reset Source	Special Conditions
Normal or Halt modes	Power-On Reset/Voltage Brown-Out	Reset delay begins after supply voltage exceeds POR level.
	Watchdog Timer time-out when configured for reset	None.
	$\overline{\text{RESET}}$ pin assertion	All reset pulses less than four system clocks in width are ignored.
	On-Chip Debugger initiated reset (OCDCTL[0] set to 1)	System, except the On-Chip Debugger is unaffected by the reset.
Stop Mode	Power-On Reset/Voltage Brown-Out	Reset delay begins after supply voltage exceeds POR level.
	$\overline{\text{RESET}}$ pin assertion	All reset pulses less than 12 ns are ignored.
	DBG pin driven Low	None.

Power-On Reset

Each device in the Z8 Encore! F0830 Series contains an internal Power-On Reset circuit. The POR circuit monitors the digital supply voltage and holds the device in the Reset state until the digital supply voltage reaches a safe operating level. After the supply voltage exceeds the POR voltage threshold (V_{POR}), the device is held in the Reset state until the POR counter has timed out. If the crystal oscillator is enabled by the option bits, the time-out is longer.

After the Z8 Encore! F0830 Series device exits the Power-On Reset state, the eZ8 CPU fetches the reset vector. Following the Power-On Reset, the POR status bit in the Reset Status (RSTSTAT) Register is set to 1.

Figure 6 displays the Power-On Reset operation. See the Electrical Characteristics chapter on page 184 for the POR threshold voltage (V_{POR}).

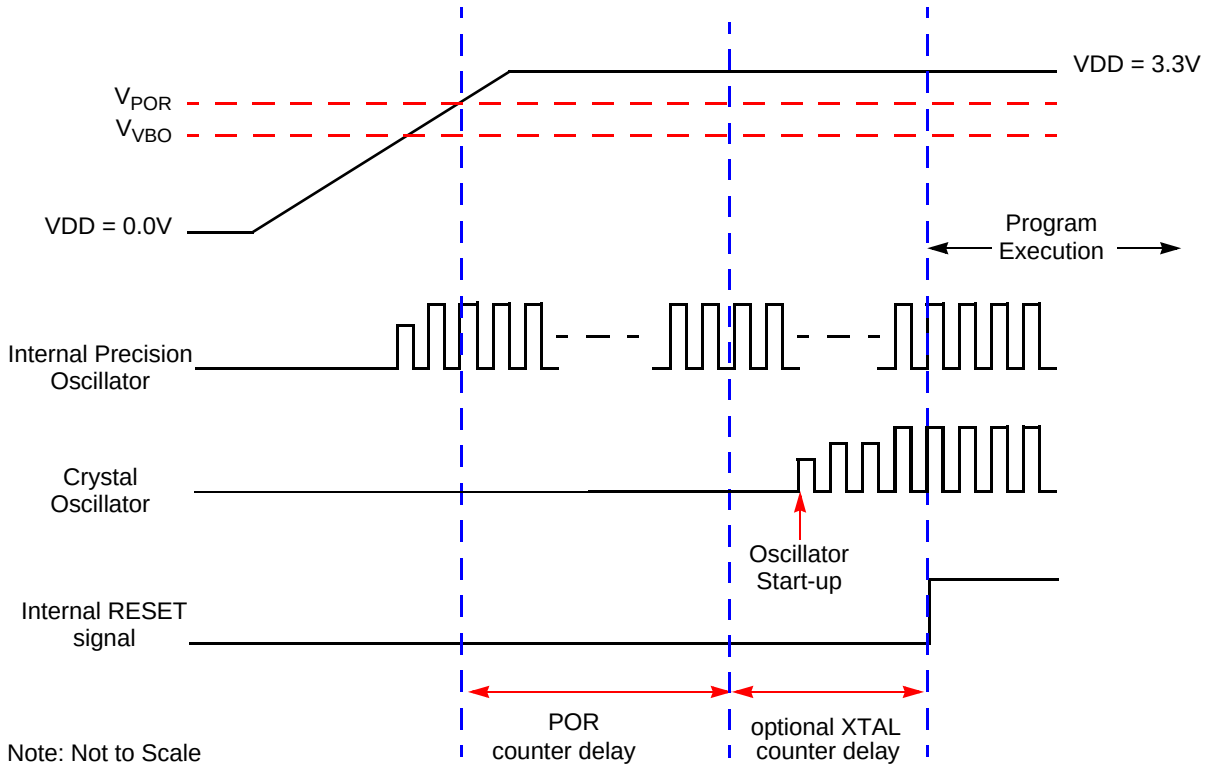

Figure 6. Power-On Reset Operation

Voltage Brown-Out Reset

The devices in the Z8 Encore! F0830 Series provide low Voltage Brown-Out (VBO) protection. The VBO circuit forces the device to the Reset state, when the supply voltage drops below the VBO threshold voltage (unsafe level). While the supply voltage remains below the Power-On Reset threshold voltage (V_{POR}), the VBO circuit holds the device in reset.

After the supply voltage exceeds the Power-On Reset threshold voltage, the device progresses through a full system reset sequence, as described in the POR section. Following Power-On Reset, the POR status bit in the Reset Status (RSTSTAT) Register is set to 1. Figure 7 displays the Voltage Brown-Out operation. See the Electrical Characteristics chapter on page 184 for the VBO and POR threshold voltages (V_{VBO} and V_{POR}).

The POR level is greater than the VBO level by the specified hysteresis value. This ensures that the device undergoes a POR after recovering from a VBO condition.

The Voltage Brown-Out circuit can be either enabled or disabled during Stop Mode. Operations during Stop Mode is set by the VBO_AO Flash option bit. See the Flash Option Bits chapter on page 124 for information about configuring VBO_AO.

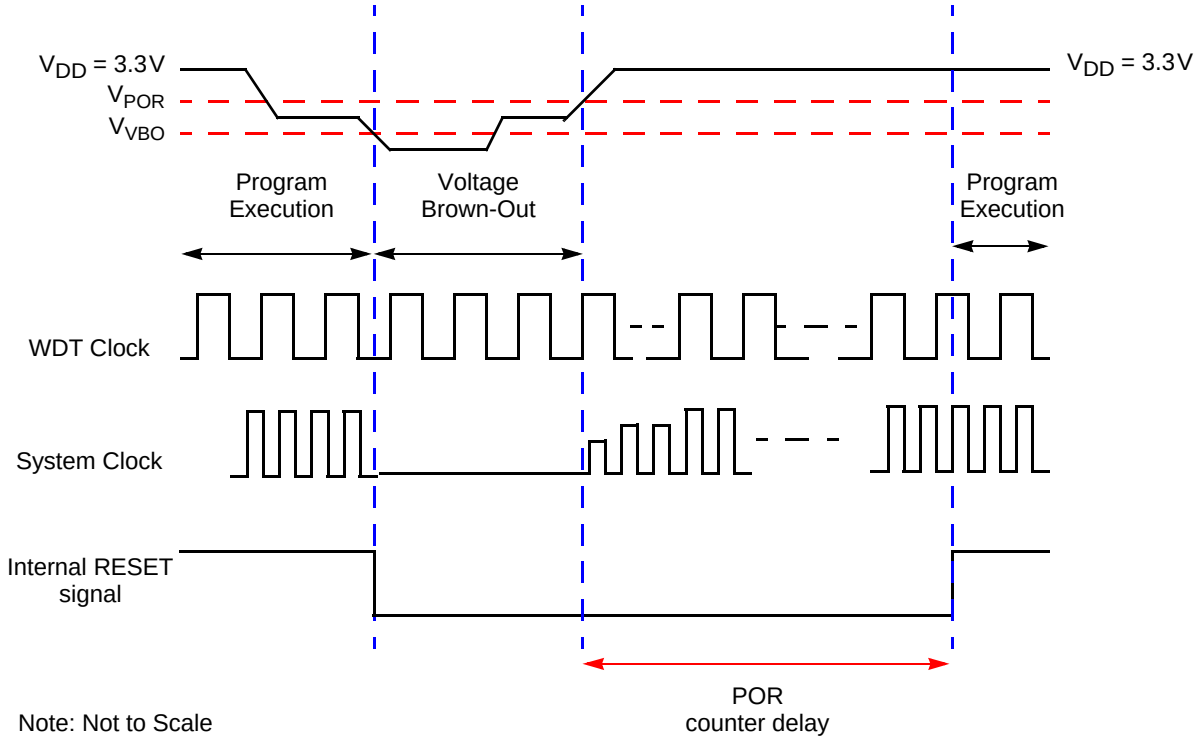

Figure 7. Voltage Brown-Out Reset Operation

Watchdog Timer Reset

If the device is operating in Normal or Stop modes, the Watchdog Timer can initiate a system reset at time-out if the WDT_RES Flash option bit is programmed to 1; this state is the unprogrammed state of the WDT_RES Flash option bit. If the bit is programmed to 0, it configures the Watchdog Timer to cause an interrupt – not a system reset – at time-out. The WDT status bit in the Reset Status (RSTSTAT) Register is set to 1 to signify that the reset was initiated by the Watchdog Timer.

External Reset Input

The $\overline{\text{RESET}}$ pin has a Schmitt-triggered input and an internal pull-up resistor. After the $\overline{\text{RESET}}$ pin is asserted for a minimum of four system clock cycles, the device progresses through the system reset sequence. Because of the possible asynchronicity of the system

clock and reset signals, the required reset duration may be three or four clock periods. A reset pulse of three clock cycles in duration might trigger a reset and a reset pulse of four cycles in duration always triggers a reset.

While the $\overline{\text{RESET}}$ input pin is asserted low, the Z8 Encore! F0830 Series devices remain in the Reset state. If the $\overline{\text{RESET}}$ pin is held low beyond the system reset time-out, the device exits the Reset state on the system clock rising edge following $\overline{\text{RESET}}$ pin deassertion. Following a system reset initiated by the external $\overline{\text{RESET}}$ pin, the EXT status bit in the Reset Status (RSTSTAT) Register is set to 1.

External Reset Indicator

During system reset or when enabled by the GPIO logic, the $\overline{\text{RESET}}$ pin functions as an open-drain (active low) RESET mode indicator in addition to the input functionality. This reset output feature allows an Z8 Encore! F0830 Series device to reset other components to which it is connected, even if that reset is caused by internal sources such as POR, VBO or WDT events. See the Port A–D Control Registers section on page 41.

After an internal Reset event occurs, the internal circuitry begins driving the $\overline{\text{RESET}}$ pin low. The $\overline{\text{RESET}}$ pin is held low by the internal circuitry until the appropriate delay listed in Table 9 (see page 22) has elapsed.

On-Chip Debugger Initiated Reset

A Power-On Reset can be initiated using the On-Chip Debugger by setting the RST bit in the OCD Control Register. The OCD block is not reset, but the remainder of the chip goes through a normal system reset. The RST bit automatically clears during the system reset. Following the system reset, the POR bit in the Reset Status (RSTSTAT) Register is set.

Stop Mode Recovery

The device enters the Stop Mode when the STOP instruction is executed by the eZ8 CPU. See the Low-Power Modes chapter on page 30 for detailed Stop Mode information. During Stop Mode Recovery, the CPU is held in reset for about 66 IPO cycles if the crystal oscillator is disabled or about 5000 cycles if it is enabled.

Stop Mode Recovery does not affect the on-chip registers other than the Reset Status (RSTSTAT) Register and the Oscillator Control Register (OSCCTL). After any Stop Mode Recovery, the IPO is enabled and selected as the system clock. If another system clock source is required or IPO disabling is required, the Stop Mode Recovery code must reconfigure the oscillator control block such that the correct system clock source is enabled and selected.

The eZ8 CPU fetches the reset vector at program memory addresses `0002h` and `0003h` and loads that value into the program counter. Program execution begins at the reset vector address. Following Stop Mode Recovery, the STOP bit in the Reset Status (RSTSTAT) Register is set to 1. Table 11 lists the Stop Mode Recovery sources and resulting actions. The following sections provide more details about each of the Stop Mode Recovery sources.

Table 11. Stop Mode Recovery Sources and Resulting Action

Operating Mode	Stop Mode Recovery Source	Action
Stop Mode	Watchdog Timer time-out when configured for Reset	Stop Mode Recovery
	Watchdog Timer time-out when configured for interrupt	Stop Mode Recovery followed by interrupt (if interrupts are enabled)
	Data transition on any GPIO port pin enabled as a Stop Mode Recovery source	Stop Mode Recovery
	Assertion of external $\overline{\text{RESET}}$ Pin	System reset
	Debug pin driven Low	System reset

Stop Mode Recovery using WDT Time-Out

If the Watchdog Timer times out during Stop Mode, the device undergoes a Stop Mode Recovery sequence. In the Reset Status (RSTSTAT) Register, the WDT and STOP bits are set to 1. If the Watchdog Timer is configured to generate an interrupt upon time-out and the Z8 Encore! F0830 Series device is configured to respond to interrupts, the eZ8 CPU services the WDT interrupt request following the normal Stop Mode Recovery sequence.

Stop Mode Recovery using GPIO Port Pin Transition

Each of the GPIO port pins may be configured as a Stop Mode Recovery input source. If any GPIO pin is enabled as a Stop Mode Recovery source, a change in the input pin value (from High to Low or from Low to High) initiates Stop Mode Recovery. In the Reset Status (RSTSTAT) Register, the STOP bit is set to 1.

Caution: In Stop Mode, the GPIO Port Input Data registers (PxIN) are disabled. These Port Input Data registers record the port transition only if the signal stays on the port pin through the end of the Stop Mode Recovery delay. As a result, short pulses on the port pin can initiate Stop Mode Recovery without being written to the Port Input Data Register or without initiating an interrupt (if enabled for that pin).

Stop Mode Recovery Using the External $\overline{\text{RESET}}$ Pin

When the Z8 Encore! F0830 Series device is in Stop Mode and the external $\overline{\text{RESET}}$ pin is driven low, a system reset occurs. Because of a glitch filter operating on the $\overline{\text{RESET}}$ pin, the low pulse must be greater than the minimum width specified about 12 ns or it is ignored. The EXT bit in the Reset Status (RSTSTAT) Register is set.

Debug Pin Driven Low

Debug reset is initiated when the On-Chip Debugger detects any of the following error conditions on the DBG pin:

- Serial break (a minimum of nine continuous bits Low)
- Framing error (received STOP bit is Low)
- Transmit collision (simultaneous OCD and host transmission detected by the OCD)

When the Z8F0830 Series device is operating in Stop Mode, the debug reset will cause a system reset. The On-Chip Debugger block is not reset, but the remainder of the chip's operations go through a normal system reset. The POR bit in the Reset Status (RSTSTAT) Register is set to 1.

Reset Register Definitions

The following sections define the Reset registers.

Reset Status Register

The Reset Status (RSTSTAT) Register, shown in Table 12, is a read-only register that indicates the source of the most recent Reset event, Stop Mode Recovery event or Watchdog Timer time-out event. Reading this register resets the upper four bits to 0.

This register shares its address with the Watchdog Timer Control Register, which is write-only.

Table 12. Reset Status Register (RSTSTAT)

Bit	7	6	5	4	3	2	1	0
Field	POR	STOP	WDT	EXT	Reserved			
RESET	See Table 13			0	0	0	0	0
R/W	R	R	R	R	R	R	R	R
Address	FF0h							

Bit	Description
[7] POR	**Power-On Reset Indicator** This bit is set to 1 if a Power-On Reset event occurs and is reset to 0, if a WDT time-out or Stop Mode Recovery occurs. Reading this register also reset this bit to 0.
[6] STOP	**Stop Mode Recovery Indicator** This bit is set to 1 if a Stop Mode Recovery occurs. If the STOP and WDT bits are both set to 1, the Stop Mode Recovery occurs because of a WDT time-out. If the STOP bit is 1 and the WDT bit is 0, the Stop Mode Recovery is not caused by a WDT time-out. This bit is reset by a Power-On Reset or a WDT time-out that occurred while not in Stop Mode. Reading this register also resets this bit.
[5] WDT	**Watchdog Timer Time-Out Indicator** This bit is set to 1 if a WDT time-out occurs. A Power-On Reset resets this pin. A Stop Mode Recovery from a change in an input pin also resets this bit. Reading this register resets this bit. This read must occur before clearing the WDT interrupt.
[4] EXT	**External Reset Indicator** If this bit is set to 1, a reset initiated by the external $\overline{\text{RESET}}$ pin occurred. A Power-On Reset or a Stop Mode Recovery from a change in an input pin resets this bit. Reading this register resets this bit.
[3:0]	**Reserved** These registers are reserved and must be programmed to 0000.

Table 13. POR Indicator Values

Reset or Stop Mode Recovery Event	POR	STOP	WDT	EXT
Power-On Reset	1	0	0	0
Reset using $\overline{\text{RESET}}$ pin assertion	0	0	0	1
Reset using Watchdog Timer time-out	0	0	1	0
Reset using the On-Chip Debugger (OCTCTL[1] set to 1)	1	0	0	0
Reset from Stop Mode using DBG pin driven Low	1	0	0	0
Stop Mode Recovery using GPIO pin transition	0	1	0	0
Stop Mode Recovery using WDT time-out	0	1	1	0

Low-Power Modes

The Z8 Encore! F0830 Series products contain power saving features. The highest level of power reduction is provided by the Stop Mode. The next level of power reduction is provided by the HALT Mode.

Further power savings can be implemented by disabling the individual peripheral blocks while in Normal Mode.

The user must not enable the pull-up register bits for unused GPIO pins, since these ports are default output to VSS. Unused GPIOs include those missing on 20-pin packages, as well as those missing on the ADC-enabled 28-pin packages.

Stop Mode

Executing the eZ8 CPU's STOP instruction places the device into Stop Mode. In Stop Mode, the operating characteristics are:

- Primary crystal oscillator and Internal Precision Oscillator are stopped; XIN and XOUT (if previously enabled) are disabled and PA0/PA1 revert to the states programmed by the GPIO registers
- System clock is stopped
- eZ8 CPU is stopped
- Program counter (PC) stops incrementing
- Watchdog Timer's internal RC oscillator continues to operate if enabled by the Oscillator Control Register
- If enabled, the Watchdog Timer logic continues to operate
- If enabled for operation in Stop Mode by the associated Flash option bit, the Voltage Brown-Out protection circuit continues to operate
- All other on-chip peripherals are idle

To minimize the current in Stop Mode, all GPIO pins that are configured as digital inputs must be driven to V_{DD} when the pull-up register bit is enabled or to one of power rail (V_{DD} or GND) when the pull-up register bit is disabled. The device can be brought out of Stop Mode using Stop Mode Recovery. For more information about Stop Mode Recovery, see the Reset and Stop Mode Recovery chapter on page 21.

HALT Mode

Executing the eZ8 CPU HALT instruction places the device into HALT Mode. In HALT Mode, the operating characteristics are:

- Primary oscillator is enabled and continues to operate
- System clock is enabled and continues to operate
- eZ8 CPU is stopped
- Program counter (PC) stops incrementing
- Watchdog Timer's internal RC oscillator continues to operate
- If enabled, the Watchdog Timer continues to operate
- All other on-chip peripherals continue to operate

The eZ8 CPU can be brought out of HALT Mode by any one of the following operations:

- Interrupt
- Watchdog Timer time-out (interrupt or reset)
- Power-On Reset
- Voltage Brown-Out reset
- External $\overline{\text{RESET}}$ pin assertion

To minimize current in HALT Mode, all GPIO pins that are configured as digital inputs must be driven to V_{DD} when pull-up register bit is enabled or to one of power rail (V_{DD} or GND) when pull-up register bit is disabled.

Peripheral Level Power Control

In addition to the Stop and Halt modes, it is possible to disable each peripheral on each of the Z8 Encore! F0830 Series devices. Disabling a given peripheral minimizes its power consumption.

Power Control Register Definitions

Power Control Register 0

Each bit of the following registers disables a peripheral block, either by gating its system clock input or by removing power from the block.

Note: This register is only reset during a Power-On Reset sequence. Other system reset events do not affect it.

Table 14. Power Control Register 0 (PWRCTL0)

Bit	7	6	5	4	3	2	1	0
Field	Reserved			VBO	Reserved	Reserved	COMP	Reserved
RESET	1	0	0	0	1	0	0	0
R/W	R/W	R/W	R/W	R/W	R/W	R/W	R/W	R/W
Address	F80h							

Bit	Description
[7:5]	**Reserved** These registers are reserved and must be programmed to 000.
[4] VBO	**Voltage Brown-Out detector disable** This bit takes only effect when the VBO_AO Flash option bit is disabled. In Stop Mode, VBO is always disabled when the VBO_AO Flash option bit is disabled. To learn more about the VBO_AO Flash option bit function, see the Flash Option Bits chapter on page 124. 0 = VBO enabled. 1 = VBO disabled.
[3]	**Reserved** This bit is reserved and must be programmed to 1.
[2]	**Reserved** This bit is reserved and must be programmed to 0.
[1] COMP	**Comparator Disable** 0 = Comparator is enabled. 1 = Comparator is disabled.
[0]	**Reserved** This bit is reserved and must be programmed to 0.

General Purpose Input/Output

The Z8 Encore! F0830 Series products support a maximum of 25 port pins (Ports A–D) for General Purpose Input/Output (GPIO) operations. Each port contains control and data registers. The GPIO control registers determine data direction, open-drain, output drive current, programmable pull-ups, Stop Mode Recovery functionality and alternate pin functions. Each port pin is individually programmable. In addition, the Port C pins are capable of direct LED drive at programmable drive strengths.

GPIO Port Availability by Device

Table 15 lists the port pins available with each device and package type.

Table 15. Port Availability by Device and Package Type

Devices	Package	10-Bit ADC	Port A	Port B	Port C	Port D	Total I/O
Z8F1232, Z8F0830, Z8F0430, Z8F0230, Z8F0130	20-pin	Yes	[7:0]	[3:0]	[3:0]	[0]	17
Z8F1233, Z8F0831 Z8F0431, Z8F0231 Z8F0131	20-pin	No	[7:0]	[3:0]	[3:0]	[0]	17
Z8F1232, Z8F0830, Z8F0430, Z8F0230, Z8F0130	28-pin	Yes	[7:0]	[5:0]	[7:0]	[0]	23
Z8F1233, Z8F0831 Z8F0431, Z8F0231 Z8F0131	28-pin	No	[7:0]	[7:0]	[7:0]	[0]	25

Note: 20-pin and 28-pin and 10-bit ADC Enabled or Disabled can be selected via the option bits.

Architecture

Figure 8 displays a simplified block diagram of a GPIO port pin. In this figure, the ability to accommodate alternate functions and variable port current drive strength is not displayed.

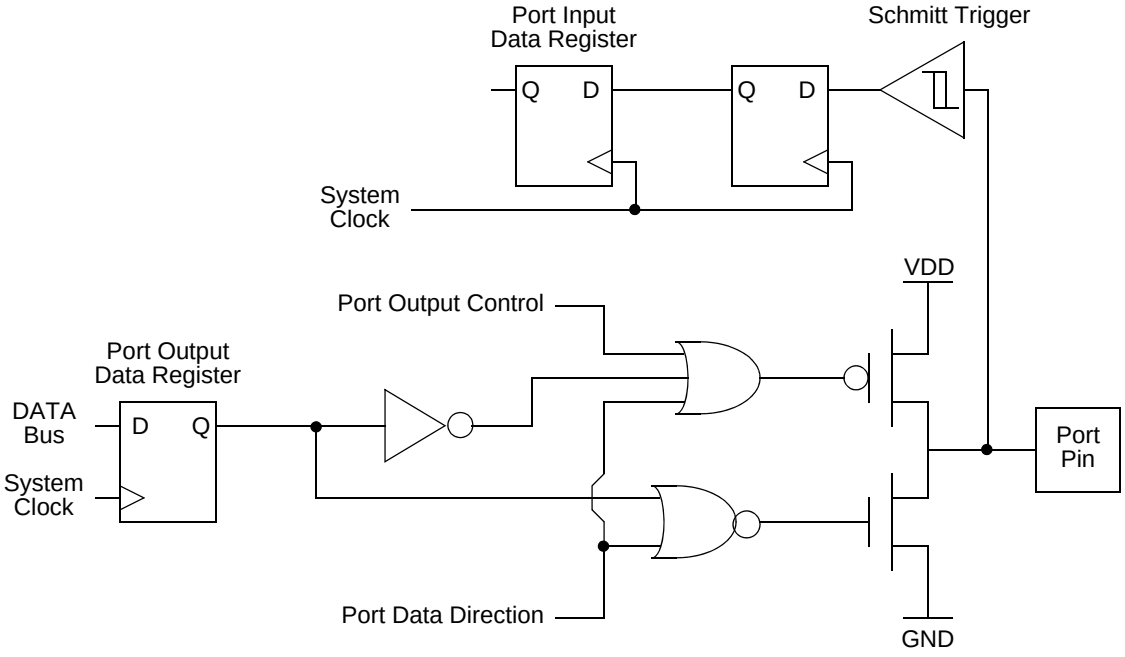

Figure 8. GPIO Port Pin Block Diagram

GPIO Alternate Functions

Many of the GPIO port pins can be used for general purpose input/output and access to on-chip peripheral functions such as the timers and serial communication devices. The Port A–D Alternate Function subregisters configure these pins for either GPIO or Alternate function operation. When a pin is configured for Alternate function, control of the port pin direction (input/output) is passed from the Port A–D data direction registers to the Alternate function assigned to this pin. Table 16 on page 36 lists the alternate functions possible with each port pin. The alternate function associated at a pin is defined through Alternate Function subregisters AFS1 and AFS2.

The crystal oscillator functionality is not controlled by the GPIO block. When the crystal oscillator is enabled in the oscillator control block, the GPIO functionality of PA0 and PA1 is overridden. In that case, pins PA0 and PA1 functions as input and output for the crystal oscillator.

PA0 and PA6 contain two different Timer functions, a timer input and a complementary timer output. Both of these functions require the same GPIO configuration, the selection between the two is based on the TIMER mode. For more details, see the Timers chapter on page 68.

Direct LED Drive

The Port C pins provide a sinked current output, capable of driving an LED without requiring an external resistor. The output sinks current at programmable levels, 3mA, 7mA, 13mA and 20mA. This mode is enabled through the LED Control registers.

For proper function, the LED anode must be connected to V_{DD} and the cathode to the GPIO pin.

Using all Port C pins in LED drive mode with maximum current may result in excessive total current. See the Electrical Characteristics chapter on page 184 for the maximum total current for the applicable package.

Shared Reset Pin

On the 20- and 28-pin devices, the Port D0 pin shares function with a bidirectional reset pin. Unlike all other I/O pins, this pin does not default to GPIO function on power-up. This pin acts as a bidirectional input/output open-drain reset with an internal pull-up until the user software reconfigures it as a GPIO PD0. When in GPIO mode, the Port D0 pin functions as output only, and must be configured as an output. PD0 supports the high drive feature, but not the stop-mode recovery feature.

Crystal Oscillator Override

For systems using a crystal oscillator, the pins PA0 and PA1 are connected to the crystal. When the crystal oscillator is enabled, the GPIO settings are overridden and PA0 and PA1 are disabled. See the Oscillator Control Register Definitions section on page 154.

5V Tolerance

In the 20- and 28-pin versions of this device, any pin, which shares functionality with an ADC, crystal or comparator port is not 5V-tolerant, including PA[1:0], PB[5:0] and PC[2:0]. All other signal pins are 5V-tolerant and can safely handle inputs higher than V_{DD} even with the pull-ups enabled, but with excess power consumption on pull-up resistor.

External Clock Setup

For systems using an external TTL drive, PB3 is the clock source for 20- and 28-pin devices. In this case, configure PB3 for Alternate function CLKIN. Write to the Oscillator Control Register (see the Oscillator Control Register Definitions section on page 154) to select the PB3 as the system clock.

Table 16. Port Alternate Function Mapping

Port	Pin	Mnemonic	Alternate Function Description	Alternate Function Set Register AFS1
Port A[1]	PA0	T0IN/$\overline{\text{T0OUT}}$	Timer 0 input/Timer 0 output complement	N/A
		Reserved		
	PA1	T0OUT	Timer 0 output	
		Reserved		
	PA2	Reserved	Reserved	
		Reserved		
	PA3	Reserved	Reserved	
		Reserved		
	PA4	Reserved	Reserved	
		Reserved		
	PA5	Reserved	Reserved	
		Reserved		
	PA6	T1IN/$\overline{\text{T1OUT}}$	Timer 1 input/Timer 1 output complement	
		Reserved		
	PA7	T1OUT	Timer 1 output	
		Reserved		

Notes:
1. Because there is only a single alternate function for each Port A and Port D (PD0) pin, the Alternate Function Set registers are not implemented for Port A and Port D (PD0). Enabling alternate function selections (as described in the Port A–D Alternate Function Subregisters section on page 42) automatically enables the associated alternate function.
2. Because there are at most two choices of alternate functions for any Port B pin, the AFS2 Alternate Function Set Register is implemented but is not used to select the function. Additionally, alternate function selection (as described in the Port A–D Alternate Function Subregisters section on page 42) must also be enabled.
3. Because there are at most two choices of alternate functions for any Port C pin, the AFS2 Alternate Function Set Register is implemented but is not used to select the function. Additionally, alternate function selection (as described in the Port A–D Alternate Function Subregisters section on page 42) must also be enabled.

Table 16. Port Alternate Function Mapping (Continued)

Port	Pin	Mnemonic	Alternate Function Description	Alternate Function Set Register AFS1
Port B[2]	PB0	Reserved		AFS1[0]: 0
		ANA0	ADC analog input	AFS1[0]: 1
	PB1	Reserved		AFS1[1]: 0
		ANA1	ADC analog input	AFS1[1]: 1
	PB2	Reserved		AFS1[2]: 0
		ANA2	ADC analog input	AFS1[2]: 1
	PB3	CLKIN	External input clock	AFS1[3]: 0
		ANA3	ADC analog input	AFS1[3]: 1
	PB4	Reserved		AFS1[4]: 0
		ANA7	ADC analog input	AFS1[4]: 1
	PB5	Reserved		AFS1[5]: 0
		V_{REF}	ADC reference voltage	AFS1[5]: 1
	PB6	Reserved		AFS1[6]: 0
		Reserved		AFS1[6]: 1
	PB7	Reserved		AFS1[7]: 0
		Reserved		AFS1[7]: 1

Notes:
1. Because there is only a single alternate function for each Port A and Port D (PD0) pin, the Alternate Function Set registers are not implemented for Port A and Port D (PD0). Enabling alternate function selections (as described in the Port A–D Alternate Function Subregisters section on page 42) automatically enables the associated alternate function.
2. Because there are at most two choices of alternate functions for any Port B pin, the AFS2 Alternate Function Set Register is implemented but is not used to select the function. Additionally, alternate function selection (as described in the Port A–D Alternate Function Subregisters section on page 42) must also be enabled.
3. Because there are at most two choices of alternate functions for any Port C pin, the AFS2 Alternate Function Set Register is implemented but is not used to select the function. Additionally, alternate function selection (as described in the Port A–D Alternate Function Subregisters section on page 42) must also be enabled.

Table 16. Port Alternate Function Mapping (Continued)

Port	Pin	Mnemonic	Alternate Function Description	Alternate Function Set Register AFS1
Port C[3]	PC0	Reserved		AFS1[0]: 0
		ANA4/CINP	ADC or comparator input	AFS1[0]: 1
	PC1	Reserved		AFS1[1]: 0
		ANA5/CINN	ADC or comparator input	AFS1[1]: 1
	PC2	Reserved		AFS1[2]: 0
		ANA6	ADC analog input	AFS1[2]: 1
	PC3	COUT	Comparator output	AFS1[3]: 0
		Reserved		AFS1[3]: 1
	PC4	Reserved		AFS1[4]: 0
				AFS1[4]: 1
	PC5	Reserved		AFS1[5]: 0
				AFS1[5]: 1
	PC6	Reserved		AFS1[6]: 0
				AFS1[6]: 1
	PC7	Reserved		AFS1[7]: 0
				AFS1[7]: 1
Port D[1]	PD0	RESET	Default to be Reset function	N/A

Notes:
1. Because there is only a single alternate function for each Port A and Port D (PD0) pin, the Alternate Function Set registers are not implemented for Port A and Port D (PD0). Enabling alternate function selections (as described in the Port A–D Alternate Function Subregisters section on page 42) automatically enables the associated alternate function.
2. Because there are at most two choices of alternate functions for any Port B pin, the AFS2 Alternate Function Set Register is implemented but is not used to select the function. Additionally, alternate function selection (as described in the Port A–D Alternate Function Subregisters section on page 42) must also be enabled.
3. Because there are at most two choices of alternate functions for any Port C pin, the AFS2 Alternate Function Set Register is implemented but is not used to select the function. Additionally, alternate function selection (as described in the Port A–D Alternate Function Subregisters section on page 42) must also be enabled.

GPIO Interrupts

Many of the GPIO port pins can be used as interrupt sources. Some port pins can be configured to generate an interrupt request on either the rising edge or falling edge of the input pin signal. Other port pin interrupt sources, generate an interrupt when any edge occurs (both rising and falling). See the Interrupt Controller chapter on page 53 for more information about interrupts using the GPIO pins.

GPIO Control Register Definitions

Four registers for each port provide access to GPIO control, input data and output data; Table 17 lists these port registers. Use the Port A–D Address and Control registers together to provide access to subregisters for port configuration and control.

Table 17. GPIO Port Registers and Subregisters

Port Register Mnemonic	Port Register Name
P*x*ADDR	Port A–D Address Register (selects subregisters)
P*x*CTL	Port A–D Control Register (provides access to subregisters)
P*x*IN	Port A–D Input Data Register
P*x*OUT	Port A–D Output Data Register
Port Subregister Mnemonic	**Port Register Name**
P*x*DD	Data Direction
P*x*AF	Alternate Function
P*x*OC	Output Control (open-drain)
P*x*HDE	High Drive Enable
P*x*SMRE	Stop Mode Recovery Source Enable
P*x*PUE	Pull-Up Enable
PxAFS1	Alternate Function Set 1
PxAFS2	Alternate Function Set 2

Port A–D Address Registers

The Port A–D Address registers select the GPIO port functionality accessible through the Port A–D Control registers. The Port A–D Address and Control registers combine to provide access to all GPIO port controls; see Tables 18 and 19.

Table 18. Port A–D GPIO Address Registers (PxADDR)

Bit	7	6	5	4	3	2	1	0
Field	PADDR[7:0]							
RESET	00h							
R/W	R/W	R/W	R/W	R/W	R/W	R/W	R/W	R/W
Address	FD0h, FD4h, FD8h, FDCh							

Bit	Description
[7:0] PADDR	**Port Address** The port address selects one of the subregisters accessible through the Port Control Register.

Table 19. Port Control Subregister Access

PADDR[7:0]	Port Control Subregister accessible using the Port A–D Control registers
00h	No function. Provides some protection against accidental port reconfiguration.
01h	Data Direction
02h	Alternate Function
03h	Output Control (open-drain)
04h	High Drive Enable
05h	Stop Mode Recovery Source Enable
06h	Pull-Up Enable
07h	Alternate Function Set 1
08h	Alternate Function Set 2
09h–FFh	No function

Port A–D Control Registers

The Port A–D Control registers, shown in Table 20, set the GPIO port operation. The value in the corresponding Port A–D Address Register determines which subregister is read from or written to by a Port A–D Control Register transaction.

Table 20. Port A–D Control Registers (P*x*CTL)

Bit	7	6	5	4	3	2	1	0
Field	PCTL							
RESET	00h							
R/W	R/W	R/W	R/W	R/W	R/W	R/W	R/W	R/W
Address	FD1h, FD5h, FD9h, FDDh							

Bit	Description
[7:0] PCTL	**Port Control** The Port Control Register provides access to all subregisters that configure the GPIO port operation.

Port A–D Data Direction Subregisters

The Port A–D Data Direction Subregister, shown in Table 21, is accessed through the Port A–D Control Register by writing `01h` to the Port A–D Address Register.

Table 21. Port A–D Data Direction Subregisters (PxDD)

Bit	7	6	5	4	3	2	1	0
Field	DD7	DD6	DD5	DD4	DD3	DD2	DD1	DD0
RESET	1	1	1	1	1	1	1	1
R/W	R/W	R/W	R/W	R/W	R/W	R/W	R/W	R/W
Address	If 01h in Port A–D Address Register, accessible through the Port A–D Control Register							

Bit	Description
[7:0] DDx	**Data Direction** These bits control the direction of the associated port pin. Port Alternate Function operation overrides the Data Direction Register setting. 0 = Output. Data in the Port A–D Output Data Register is driven onto the port pin. 1 = Input. The port pin is sampled and the value written into the Port A–D Input Data Register. The output driver is tristated.

Note: x indicates the specific GPIO port pin number (7–0).

Port A–D Alternate Function Subregisters

The Port A–D Alternate Function Subregister is accessed through the Port A–D Control Register by writing `02h` to the Port A–D Address Register. See Table 22 on page 42. The Port A–D Alternate Function subregisters enable the alternate function selection on pins. If disabled, the pins function as GPIOs. If enabled, select one of four alternate functions using Alternate Function Set subregisters 1 and 2, as described in the the Port A–D Alternate Function Set 1 Subregisters section on page 47 and the Port A–D Alternate Function Set 2 Subregisters section on page 48**.** See the GPIO Alternate Functions section on page 34 to determine the alternate functions associated with each port pin.

Caution: Do not enable alternate functions for GPIO port pins for which there is no associated Alternate function. Failure to follow this guideline can result in unpredictable operation.

Table 22. Port A–D Alternate Function Subregisters (PxAF)

Bit	7	6	5	4	3	2	1	0
Field	AF7	AF6	AF5	AF4	AF3	AF2	AF1	AF0
RESET	00h (Ports A–C); 01h (Port D)							
R/W	R/W							
Address	If 02h in Port A–D Address Register, then accessible through the Port A–D Control Register							

Bit	Description
[7:0] AFx	**Port Alternate Function Enable** 0 = The port pin is in Normal Mode and the `DDx` bit in the Port A–D Data Direction Subregister determines the direction of the pin. 1 = The alternate function selected through Alternate function set subregisters is enabled. Port pin operation is controlled by the Alternate function.

Note: x indicates the specific GPIO port pin number (7–0).

Port A–D Output Control Subregisters

The Port A–D Output Control Subregister, shown in Table 23, is accessed through the Port A–D Control Register by writing `03h` to the Port A–D Address Register. Setting the bits in the Port A–D Output Control subregisters to 1 configures the specified port pins for open-drain operation. These subregisters affect the pins directly and, as a result, alternate functions are also affected.

Table 23. Port A–D Output Control Subregisters (PxOC)

Bit	7	6	5	4	3	2	1	0
Field	POC7	POC6	POC5	POC4	POC3	POC2	POC1	POC0
RESET	0	0	0	0	0	0	0	0
R/W	R/W	R/W	R/W	R/W	R/W	R/W	R/W	R/W
Address	If 03h in Port A–D Address Register, accessible through the Port A–D Control Register							

Bit	Description
[7:0] POCx	**Port Output Control** These bits function independently of the Alternate function bit and always disable the drains, if set to 1. 0 = The drains are enabled for any OUTPUT Mode (unless overridden by the Alternate function). 1 = The drain of the associated pin is disabled (OPEN-DRAIN mode).

Note: x indicates the specific GPIO port pin number (7–0).

Port A–D High Drive Enable Subregisters

The Port A–D High Drive Enable Subregister, shown in Table 24, is accessed through the Port A–D Control Register by writing `04h` to the Port A–D Address Register. Setting the bits in the Port A–D High Drive Enable subregisters to 1 configures the specified port pins for high-output current drive operation. The Port A–D High Drive Enable Subregister affects the pins directly and, as a result, alternate functions are also affected.

Table 24. Port A–D High Drive Enable Subregisters (PxHDE)

Bit	7	6	5	4	3	2	1	0
Field	PHDE7	PHDE6	PHDE5	PHDE4	PHDE3	PHDE2	PHDE1	PHDE0
RESET	0	0	0	0	0	0	0	0
R/W	R/W	R/W	R/W	R/W	R/W	R/W	R/W	R/W
Address	If 04h in Port A–D Address Register, accessible through the Port A–D Control Register							

Bit	Description
[7:0] PHDEx	**Port High Drive Enable** 0 = The port pin is configured for standard output current drive. 1 = The port pin is configured for high output current drive.

Note: x indicates the specific GPIO port pin number (7–0).

Port A–D Stop Mode Recovery Source Enable Subregisters

The Port A–D Stop Mode Recovery Source Enable Subregister, shown in Table 25, is accessed through the Port A–D Control Register by writing `05h` to the Port A–D Address Register. Setting the bits in the Port A–D Stop Mode Recovery Source Enable subregisters to 1 configures the specified port pins as a Stop Mode Recovery source. During Stop Mode, any logic transition on a port pin enabled as a Stop Mode Recovery source initiates a Stop Mode Recovery event.

Table 25. Port A–D Stop Mode Recovery Source Enable Subregisters (PxSMRE)

Bit	7	6	5	4	3	2	1	0
Field	PSMRE7	PSMRE6	PSMRE5	PSMRE4	PSMRE3	PSMRE2	PSMRE1	PSMRE0
RESET	0	0	0	0	0	0	0	0
R/W	R/W	R/W	R/W	R/W	R/W	R/W	R/W	R/W
Address	If 05h in Port A–D Address Register, accessible through the Port A–D Control Register							

Bit	Description
[7:0] PSMREx	**Port Stop Mode Recovery Source Enable** 0 = The port pin is not configured as a Stop Mode Recovery source. Transitions on this pin during Stop Mode do not initiate Stop Mode Recovery. 1 = The port pin is configured as a Stop Mode Recovery source. Any logic transition on this pin during Stop Mode initiates Stop Mode Recovery.

Note: x indicates the specific GPIO port pin number (7–0).

Port A–D Pull-up Enable Subregisters

The Port A–D Pull-Up Enable Subregister is accessed through the Port A–D Control Register by writing `06h` to the Port A–D Address Register. See Table 26. Setting the bits in the Port A–D Pull-Up Enable subregisters enables a weak internal resistive pull-up on the specified port pins.

Table 26. Port A–D Pull-Up Enable Subregisters (PxPUE)

Bit	7	6	5	4	3	2	1	0
Field	PPUE7	PPUE6	PPUE5	PPUE4	PPUE3	PPUE2	PPUE1	PPUE0
RESET	0	0	0	0	0	0	0	0
R/W	R/W	R/W	R/W	R/W	R/W	R/W	R/W	R/W
Address	If 06h in Port A–D Address Register, accessible through the Port A–D Control Register							

Bit	Description
[7:0] P*x*PUE	**Port Pull-Up Enable** 0 = The weak pull-up on the port pin is disabled. 1 = The weak pull-up on the port pin is enabled.

Note: x indicates the specific GPIO port pin number (7–0).

Port A–D Alternate Function Set 1 Subregisters

The Port A–D Alternate Function Set 1 Subregister, shown in Table 27, is accessed through the Port A–D Control Register by writing `07h` to the Port A–D Address Register. The Alternate Function Set 1 subregisters select the alternate function available at a port pin. Alternate functions selected by setting or clearing bits in this register are defined in the GPIO Alternate Functions section on page 34.

Note: Alternate function selection on the port pins must also be enabled, as described in the Port A–D Alternate Function Subregisters section on page 42.

Table 27. Port A–D Alternate Function Set 1 Subregisters (PxAFS1)

Bit	7	6	5	4	3	2	1	0
Field	PAFS17	PAFS16	PAFS15	PAFS14	PAFS13	PAFS12	PAFS11	PAFS10
RESET	0	0	0	0	0	0	0	0
R/W	R/W	R/W	R/W	R/W	R/W	R/W	R/W	R/W
Address	If 07h in Port A–D Address Register, accessible through the Port A–D Control Register							

Bit	Description
[7:0] PAFS1x	**Port Alternate Function Set 1** 0 = Port Alternate function selected as defined in Table 16 in GPIO Alternate Functions section. 1 = Port Alternate function selected as defined in Table 16 in GPIO Alternate Functions section.

Note: x indicates the specific GPIO port pin number (7–0).

Port A–D Alternate Function Set 2 Subregisters

The Port A–D Alternate Function Set 2 Subregister, shown in Table 28, is accessed through the Port A–D Control Register by writing `08h` to the Port A–D Address Register. The Alternate Function Set 2 subregisters select the alternate function available at a port pin. Alternate functions selected by setting or clearing bits in this register are defined in Table 16 in the GPIO Alternate Functions section on page 34.

Note: Alternate function selection on the port pins must also be enabled, as described in the Port A–D Alternate Function Subregisters section on page 42.

Table 28. Port A–D Alternate Function Set 2 Subregisters (PxAFS2)

Bit	7	6	5	4	3	2	1	0
Field	PAFS27	PAFS26	PAFS25	PAFS24	PAFS23	PAFS22	PAFS21	PAFS20
RESET	0	0	0	0	0	0	0	0
R/W	R/W	R/W	R/W	R/W	R/W	R/W	R/W	R/W
Address	If 08h in Port A–D Address Register, accessible through the Port A–D Control Register							

Bit	Description
[7:0] PAFS2x	**Port Alternate Function Set 2** 0 = The Port Alternate function is selected, as defined in Table 16 in the GPIO Alternate Functions section on page 34. 1 = The Port Alternate function is selected, as defined in Table 16 in the GPIO Alternate Functions section on page 34.

Note: x indicates the specific GPIO port pin number (7–0).

Port A–C Input Data Registers

Reading from the Port A–C Input Data registers, shown in Table 29, return the sampled values from the corresponding port pins. The Port A–C Input Data registers are read-only. The value returned for any unused ports is 0. Unused ports include those not included in the 8- and 28-pin packages, as well as those not included in the ADC-enabled 28-pin packages.

Table 29. Port A–C Input Data Registers (PxIN)

Bit	7	6	5	4	3	2	1	0
Field	PIN7	PIN6	PIN5	PIN4	PIN3	PIN2	PIN1	PIN0
RESET	X	X	X	X	X	X	X	X
R/W	R	R	R	R	R	R	R	R
Address	FD2h, FD6h, FDAh							

Bit	Description
[7:0] PxIN	**Port Input Data** Sampled data from the corresponding port pin input. 0 = Input data is logical 0 (Low). 1 = Input data is logical 1 (High).

Note: x indicates the specific GPIO port pin number (7–0).

Port A–D Output Data Register

The Port A–D Output Data Register, shown in Table 30, controls the output data to the pins.

Table 30. Port A–D Output Data Register (PxOUT)

Bit	7	6	5	4	3	2	1	0
Field	POUT7	POUT6	POUT5	POUT4	POUT3	POUT2	POUT1	POUT0
RESET	0	0	0	0	0	0	0	0
R/W	R/W	R/W	R/W	R/W	R/W	R/W	R/W	R/W
Address	FD3h, FD7h, FDBh, FDFh							

Bit	Description
[7:0] PxOUT	**Port Output Data** These bits contain the data to be driven to the port pins. The values are only driven if the corresponding pin is configured as an output and the pin is not configured for Alternate function operation. 0 = Drive a logical 0 (Low). 1= Drive a logical 1 (High). High value is not driven if the drain has been disabled by setting the corresponding port output Control Register bit to 1.

Note: x indicates the specific GPIO port pin number (7–0).

LED Drive Enable Register

The LED Drive Enable Register, shown in Table 31, activates the controlled current drive. The Alternate Function Register has no control over the LED function; therefore, setting the Alternate Function Register to select the LED function is not required. LEDEN bits [7:0] correspond to Port C bits [7:0], respectively.

Table 31. LED Drive Enable (LEDEN)

Bit	7	6	5	4	3	2	1	0
Field	LEDEN[7:0]							
RESET	0	0	0	0	0	0	0	0
R/W	R/W	R/W	R/W	R/W	R/W	R/W	R/W	R/W
Address	F82h							

Bit	Description
[7:0] LEDEN	**LED Drive Enable** These bits determine which Port C pins are connected to an internal current sink. 0 = Tristate the Port C pin. 1= Connect controlled current sink to the Port C pin.

LED Drive Level High Register

The LED Drive Level High Register, shown in Table 32, contains two control bits for each Port C pin. These two bits select one of four programmable current drive levels for each Port C pin. Each pin is individually programmable.

Table 32. LED Drive Level High Register (LEDLVLH)

Bit	7	6	5	4	3	2	1	0
Field	LEDLVLH[7:0]							
RESET	0	0	0	0	0	0	0	0
R/W	R/W	R/W	R/W	R/W	R/W	R/W	R/W	R/W
Address	F83h							

Bit	Description
[7:0] LEDLVLH	**LED Level High Bits** {LEDLVLH, LEDLVLL} select one of four programmable current drive levels for each Port C pin. 00 = 3mA. 01= 7mA. 10= 13mA. 11= 20mA.

LED Drive Level Low Register

The LED Drive Level Low Register, shown in Table 33, contains two control bits for each Port C pin. These two bits select one of four programmable current drive levels for each Port C pin. Each pin is individually programmable.

Table 33. LED Drive Level Low Register (LEDLVLL)

Bit	7	6	5	4	3	2	1	0
Field	LEDLVLL[7:0]							
RESET	0	0	0	0	0	0	0	0
R/W	R/W	R/W	R/W	R/W	R/W	R/W	R/W	R/W
Address	F84h							

Bit	Description
[7:0] LEDLVLL	**LED Level Low Bits** {LEDLVLH, LEDLVLL} select one of four programmable current drive levels for each Port C pin. 00 = 3mA. 01 = 7mA. 10 = 13mA. 11 = 20mA.

Interrupt Controller

The Interrupt Controller on the Z8 Encore!® F0830 Series products prioritize the interrupt requests from the on-chip peripherals and the GPIO port pins. The features of the Interrupt Controller include:

- Seventeen interrupt sources using sixteen unique interrupt vectors:
  - Twelve GPIO port pin interrupt sources
  - Five on-chip peripheral interrupt sources (Comparator Output interrupt shares one interrupt vector with PA6)
- Flexible GPIO interrupts
  - Eight selectable rising and falling edge GPIO interrupts
  - Four dual-edge interrupts
- Three levels of individually programmable interrupt priority
- Watchdog Timer can be configured to generate an interrupt
  m

Interrupt requests (IRQs) allow peripheral devices to suspend CPU operation in an orderly manner and force the CPU to start an interrupt service routine (ISR). Usually this interrupt service routine is involved with the exchange of data, status information or control information between the CPU and the interrupting peripheral. When the service routine is completed, the CPU returns to the operation from which it was interrupted.

The eZ8 CPU supports both vectored and polled interrupt handling. For polled interrupts, the Interrupt Controller has no effect on operation. For more information about interrupt servicing by the eZ8 CPU, refer to the eZ8 CPU User Manual (UM0128), which is available for download at www.zilog.com.

Interrupt Vector Listing

Table 34 lists the interrupts available in order of priority. The interrupt vector is stored with the most significant byte (MSB) at the even program memory address and the least significant byte (LSB) at the odd program memory address.

Note: Some port interrupts are not available on the 20-pin and 28-pin packages. The ADC interrupt is unavailable on devices not containing an ADC.

Table 34. Trap and Interrupt Vectors in Order of Priority

Priority	Program Memory Vector Address	Interrupt or Trap Source
Highest	0002h	Reset (not an interrupt)
	0004h	Watchdog Timer (see Watchdog Timer chapter)
	003Ah	Primary oscillator fail trap (not an interrupt)
	003Ch	Watchdog Oscillator fail trap (not an interrupt)
	0006h	Illegal instruction trap (not an interrupt)
	0008h	Reserved
	000Ah	Timer 1
	000Ch	Timer 0
	000Eh	Reserved
	0010h	Reserved
	0012h	Reserved
	0014h	Reserved
	0016h	ADC
	0018h	Port A7, selectable rising or falling input edge
	001Ah	Port A6, selectable rising or falling input edge or Comparator Output
	001Ch	Port A5, selectable rising or falling input edge
	001Eh	Port A4, selectable rising or falling input edge
	0020h	Port A3, selectable rising or falling input edge
	0022h	Port A2, selectable rising or falling input edge
	0024h	Port A1, selectable rising or falling input edge
	0026h	Port A0, selectable rising or falling input edge
	0028h	Reserved
	002Ah	Reserved
	002Ch	Reserved
	002Eh	Reserved
	0030h	Port C3, both input edges
	0032h	Port C2, both input edges
	0034h	Port C1, both input edges
	0036h	Port C0, both input edges
Lowest	0038h	Reserved

Architecture

Figure 9 displays the Interrupt Controller block diagram.

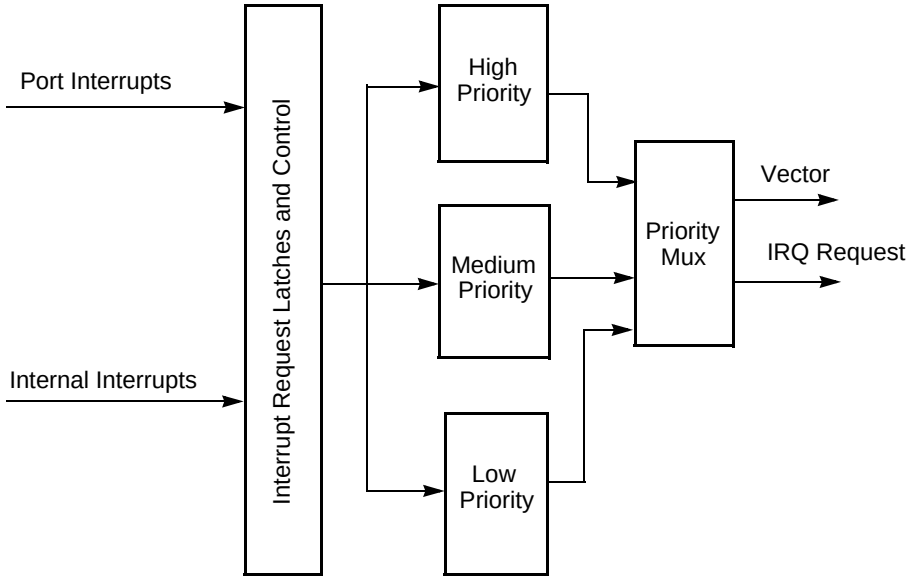

Figure 9. Interrupt Controller Block Diagram

Operation

This section describes the operational aspects of the following functions.

Master Interrupt Enable: see page 55

Interrupt Vectors and Priority: see page 56

Interrupt Assertion: see page 56

Software Interrupt Assertion: see page 57

Master Interrupt Enable

The master interrupt enable bit (IRQE) in the Interrupt Control Register globally enables and disables the interrupts.

Interrupts are globally enabled by any of the following actions:

- Execution of an EI (enable interrupt) instruction
- Execution of an IRET (return from interrupt) instruction

- Writing 1 to the IRQE bit in the Interrupt Control Register

Interrupts are globally disabled by any of the following actions:

- Execution of a Disable Interrupt (DI) instruction
- eZ8 CPU acknowledgement of an interrupt service request from the Interrupt Controller
- Writing a 0 to the IRQE bit in the Interrupt Control Register
- Reset
- Execution of a trap instruction
- Illegal instruction Trap
- Primary oscillator fail trap
- Watchdog Oscillator fail trap

Interrupt Vectors and Priority

The Interrupt Controller supports three levels of interrupt priority. Level 3 is the highest priority, level 2 is the second highest priority and level 1 is the lowest priority. If all of the interrupts are enabled with identical interrupt priority (all as level 2 interrupts, for example), the interrupt priority is assigned from highest to lowest as specified in Table 34 on page 54. Level 3 interrupts are always assigned higher priority than level 2 interrupts and level 2 interrupts are assigned higher priority than level 1 interrupts. Within each interrupt priority level (level 1, level 2 or level 3), priority is assigned as specified in Table 34, above. Reset, Watchdog Timer interrupt (if enabled), primary oscillator fail trap, Watchdog Oscillator fail trap and illegal instruction trap always have highest (level 3) priority.

Interrupt Assertion

Interrupt sources assert their interrupt requests for only a single system clock period (single pulse). When the interrupt request is acknowledged by the eZ8 CPU, the corresponding bit in the interrupt request register is cleared. Writing 0 to the corresponding bit in the interrupt request register clears the interrupt request.

Caution: Zilog recommends not using a coding style that clears bits in the Interrupt Request registers. All incoming interrupts received between execution of the first LDX command and the final LDX command are lost. See Example 1, which follows.

Example 1. A poor coding style that can result in lost interrupt requests:

```
LDX r0, IRQ0
AND r0, MASK
LDX IRQ0, r0
```

To avoid missing interrupts, use the coding style in Example 2 to clear bits in the Interrupt Request 0 Register:

Example 2. A good coding style that avoids lost interrupt requests:

```
ANDX IRQ0, MASK
```

Software Interrupt Assertion

Program code can generate interrupts directly. Writing 1 to the correct bit in the interrupt request register triggers an interrupt (assuming that interrupt is enabled). When the interrupt request is acknowledged by the eZ8 CPU, the bit in the interrupt request register is automatically cleared to 0.

Caution: Zilog recommends not using a coding style to generate software interrupts by setting bits in the Interrupt Request registers. All incoming interrupts received between execution of the first LDX command and the final LDX command are lost. See Example 3, which follows.

Example 3. A poor coding style that can result in lost interrupt requests:

```
LDX r0, IRQ0
OR r0, MASK
LDX IRQ0, r0
```

To avoid missing interrupts, use the coding style in Example 4 to set bits in the Interrupt Request registers:

Example 4. A good coding style that avoids lost interrupt requests:

```
ORX IRQ0, MASK
```

Interrupt Control Register Definitions

The Interrupt Control registers enable individual interrupts, set interrupt priorities and indicate interrupt requests for all of the interrupts other than the Watchdog Timer interrupt, the primary oscillator fail trap and the Watchdog Oscillator fail trap interrupts.

Interrupt Request 0 Register

The Interrupt Request 0 (IRQ0) Register, shown in Table 35 stores the interrupt requests for both vectored and polled interrupts. When a request is sent to the Interrupt Controller, the corresponding bit in the IRQ0 Register becomes 1. If interrupts are globally enabled (vectored interrupts), the Interrupt Controller passes an interrupt request to the eZ8 CPU. If interrupts are globally disabled (polled interrupts), the eZ8 CPU can read the Interrupt Request 0 Register to determine if any interrupt requests are pending.

Table 35. Interrupt Request 0 Register (IRQ0)

Bit	7	6	5	4	3	2	1	0
Field	Reserved	T1I	T0I	Reserved				ADCI
RESET	0	0	0	0	0	0	0	0
R/W	R/W	R/W	R/W	R/W	R/W	R/W	R/W	R/W
Address	FC0h							

Bit	Description
[7]	**Reserved** This bit is reserved and must be programmed to 0.
[6] T1I	**Timer 1 Interrupt Request** 0 = No interrupt request is pending for timer 1. 1 = An interrupt request from timer 1 is awaiting service.
[5] T0I	**Timer 0 Interrupt Request** 0 = No interrupt request is pending for timer 0. 1 = An interrupt request from timer 0 is awaiting service.
[4:1]	**Reserved** These registers are reserved and must be programmed to 0000.
[0] ADCI	**ADC Interrupt Request** 0 = No interrupt request is pending for the analog-to-digital converter. 1 = An interrupt request from the analog-to-digital converter is awaiting service.

Interrupt Request 1 Register

The Interrupt Request 1 (IRQ1) Register, shown in Table 36, stores interrupt requests for both vectored and polled interrupts. When a request is sent to the Interrupt Controller, the corresponding bit in the IRQ1 Register becomes 1. If interrupts are globally enabled (vectored interrupts), the Interrupt Controller passes an interrupt request to the eZ8 CPU. If interrupts are globally disabled (polled interrupts), the eZ8 CPU can read the Interrupt Request 1 Register to determine if any interrupt requests are pending.

Table 36. Interrupt Request 1 Register (IRQ1)

Bit	7	6	5	4	3	2	1	0
Field	PA7I	PA6CI	PA5I	PA4I	PA3I	PA2I	PA1I	PA0I
RESET	0	0	0	0	0	0	0	0
R/W	R/W	R/W	R/W	R/W	R/W	R/W	R/W	R/W
Address	FC3h							

Bit	Description
[7] PA7I	**Port A7** 0 = No interrupt request is pending for GPIO Port A. 1 = An interrupt request from GPIO Port A.
[6] PA6CI	**Port A6 or Comparator Interrupt Request** 0 = No interrupt request is pending for GPIO Port A or comparator. 1 = An interrupt request from GPIO Port A or comparator.
[5] PAxI	**Port A Pin *x* Interrupt Request** 0 = No interrupt request is pending for GPIO Port A pin *x*. 1 = An interrupt request from GPIO Port A pin *x* is awaiting service.

Note: x indicates the specific GPIO port pin number (5–0).

Interrupt Request 2 Register

The Interrupt Request 2 (IRQ2) Register, shown in Table 37, stores interrupt requests for both vectored and polled interrupts. When a request is sent to the Interrupt Controller, the corresponding bit in the IRQ2 Register becomes 1. If interrupts are globally enabled (vectored interrupts), the Interrupt Controller passes an interrupt request to the eZ8 CPU. If interrupts are globally disabled (polled interrupts), the eZ8 CPU can read the Interrupt Request 2 Register to determine if any interrupt requests are pending.

Table 37. Interrupt Request 2 Register (IRQ2)

Bit	7	6	5	4	3	2	1	0
Field	Reserved				PC3I	PC2I	PC1I	PC0I
RESET	0	0	0	0	0	0	0	0
R/W	R/W	R/W	R/W	R/W	R/W	R/W	R/W	R/W
Address	FC6h							

Bit	Description
[7:4]	**Reserved** These registers are reserved and must be programmed to 0000.
[3] PC*x*I	**Port C Pin *x* Interrupt Request** 0 = No interrupt request is pending for GPIO Port C pin *x*. 1 = An interrupt request from GPIO Port C pin *x* is awaiting service.

Note: x indicates the specific GPIO port pin number (3–0).

IRQ0 Enable High and Low Bit Registers

Table 38 lists the priority control values for IRQ0. The IRQ0 Enable High and Low Bit registers, shown in Tables 39 and 40, form a priority-encoded enabling service for interrupts in the Interrupt Request 0 Register. Priority is generated by setting the bits in each register.

Table 38. IRQ0 Enable and Priority Encoding

IRQ0ENH[*x*]	IRQ0ENL[*x*]	Priority	Description
0	0	Disabled	Disabled
0	1	Level 1	Low
1	0	Level 2	Nominal
1	1	Level 3	High

Note: *x* indicates the register bits in the range 7–0.

Table 39. IRQ0 Enable High Bit Register (IRQ0ENH)

Bit	7	6	5	4	3	2	1	0
Field	Reserved	T1ENH	T0ENH	Reserved				ADCENH
RESET	0	0	0	0	0	0	0	0
R/W	R/W	R/W	R/W	R/W	R/W	R/W	R/W	R/W
Address	FC1h							

Bit	Description
[7]	**Reserved** This bit is reserved and must be programmed to 0.
[6] T1ENH	**Timer 1 Interrupt Request Enable High Bit**
[5] T0ENH	**Timer 0 Interrupt Request Enable High Bit**
[4:1]	**Reserved** These registers are reserved and must be programmed to 0000.
[0] ADCENH	**ADC Interrupt Request Enable High Bit**

Table 40. IRQ0 Enable Low Bit Register (IRQ0ENL)

Bit	7	6	5	4	3	2	1	0
Field	Reserved	T1ENL	T0ENL	Reserved				ADCENL
RESET	0	0	0	0	0	0	0	0
R/W	R	R/W	R/W	R/W	R/W	R	R	R/W
Address	FC2h							

Bit	Description
[7]	**Reserved** This bit is reserved and must be programmed to 0.
[6] T1ENL	**Timer 1 Interrupt Request Enable Low Bit**
[5] T0ENL	**Timer 0 Interrupt Request Enable Low Bit**
[4:1]	**Reserved** These registers are reserved and must be programmed to 0000.
[0] ADCENL	**ADC Interrupt Request Enable Low Bit**

IRQ1 Enable High and Low Bit Registers

Table 41 describes the priority control for IRQ1. The IRQ1 Enable High and Low Bit registers, shown in Tables 42 and 43, form a priority-encoded enabling service for interrupts in the Interrupt Request 1 Register. Priority is generated by setting the bits in each register.

Table 41. IRQ1 Enable and Priority Encoding

IRQ1ENH[*x*]	IRQ1ENL[*x*]	Priority	Description
0	0	Disabled	Disabled
0	1	Level 1	Low
1	0	Level 2	Nominal
1	1	Level 3	High

Note: *x* indicates register bits in the address range 7–0.

Table 42. IRQ1 Enable High Bit Register (IRQ1ENH)

Bit	7	6	5	4	3	2	1	0
Field	PA7ENH	PA6CENH	PA5ENH	PA4ENH	PA3ENH	PA2ENH	PA1ENH	PA0ENH
RESET	0	0	0	0	0	0	0	0
R/W	R/W	R/W	R/W	R/W	R/W	R/W	R/W	R/W
Address	FC4h							

Bit	Description
[7] PA7ENH	**Port A Bit[7] Interrupt Request Enable High Bit**
[6] PA6CENH	**Port A Bit[7] or Comparator Interrupt Request Enable High Bit**
[5:0] PA*x*ENH	**Port A Bit[*x*] Interrupt Request Enable High Bit** See the interrupt port select register for selection of either Port A or Port D as the interrupt source.

Note: *x* indicates register bits in the address range 5–0.

Table 43. IRQ1 Enable Low Bit Register (IRQ1ENL)

Bit	7	6	5	4	3	2	1	0
Field	PA7ENL	PA6CENL	PA5ENL	PA4ENL	PA3ENL	PA2ENL	PA1ENL	PA0ENL
RESET	0	0	0	0	0	0	0	0
R/W	R/W	R/W	R/W	R/W	R/W	R/W	R/W	R/W
Address	FC5h							

Bit	Description
[7] PA7ENL	**Port A Bit[7] Interrupt Request Enable Low Bit**
[6] PA6CENL	**Port A Bit[7] or Comparator Interrupt Request Enable Low Bit**
[5:0] PA*x*ENL	**Port A Bit[*x*] Interrupt Request Enable Low Bit** See the interrupt port select register for selection of either Port A or Port D as the interrupt source.

Note: *x* indicates register bits in the address range 5–0.

IRQ2 Enable High and Low Bit Registers

Table 44 describes the priority control for IRQ2. The IRQ2 Enable High and Low Bit registers, shown in Tables 45 and 46, form a priority-encoded enabling service for interrupts in the Interrupt Request 2 Register. Priority is generated by setting the bits in each register.

Table 44. IRQ2 Enable and Priority Encoding

IRQ2ENH[*x*]	IRQ2ENL[*x*]	Priority	Description
0	0	Disabled	Disabled
0	1	Level 1	Low
1	0	Level 2	Nominal
1	1	Level 3	High

Note: *x* indicates register bits in the address range 7–0.

Table 45. IRQ2 Enable High Bit Register (IRQ2ENH)

Bit	7	6	5	4	3	2	1	0
Field	Reserved				C3ENH	C2ENH	C1ENH	C0ENH
RESET	0	0	0	0	0	0	0	0
R/W	R/W	R/W	R/W	R/W	R/W	R/W	R/W	R/W
Address	FC7h							

Bit	Description
[7:4]	**Reserved** These registers are reserved and must be programmed to 0000.
[3] C3ENH	**Port C3 Interrupt Request Enable High Bit**
[2] C2ENH	**Port C2 Interrupt Request Enable High Bit**
[1] C1ENH	**Port C1 Interrupt Request Enable High Bit**
[0] C0ENH	**Port C0 Interrupt Request Enable High Bit**

Table 46. IRQ2 Enable Low Bit Register (IRQ2ENL)

Bit	7	6	5	4	3	2	1	0
Field	Reserved				C3ENL	C2ENL	C1ENL	C0ENL
RESET	0	0	0	0	0	0	0	0
R/W	R/W	R/W	R/W	R/W	R/W	R/W	R/W	R/W
Address	FC8h							

Bit	Description
[7:4]	**Reserved** These registers are reserved and must be programmed to 0000.
[3] C3ENL	**Port C3 Interrupt Request Enable Low Bit**
[2] C2ENL	**Port C2 Interrupt Request Enable Low Bit**
[1] C1ENL	**Port C1 Interrupt Request Enable Low Bit**
[0] C0ENL	**Port C0 Interrupt Request Enable Low Bit**

Interrupt Edge Select Register

The interrupt edge select (IRQES) register determines whether an interrupt is generated for the rising edge or falling edge on the selected GPIO Port A or Port D input pin. See Table 47.

Table 47. Interrupt Edge Select Register (IRQES)

Bit	7	6	5	4	3	2	1	0
Field	IES7	IES6	IES5	IES4	IES3	IES2	IES1	IES0
RESET	0	0	0	0	0	0	0	0
R/W	R/W	R/W	R/W	R/W	R/W	R/W	R/W	R/W
Address	FCDh							

Bit	Description
[7] IES*x*	**Interrupt Edge Select *x*** 0 = An interrupt request is generated on the falling edge of the PA*x* input or PDx. 1 = An interrupt request is generated on the rising edge of the PA*x* input or PDx.

Note: *x* indicates register bits in the address range 7–0.

Shared Interrupt Select Register

The shared interrupt select (IRQSS) register determines the source of the PADxS interrupts. See Table 48. The shared interrupt select register selects between Port A and alternate sources for the individual interrupts.

Because these shared interrupts are edge-triggered, it is possible to generate an interrupt just by switching from one shared source to another. For this reason, an interrupt must be disabled before switching between sources.

Table 48. Shared Interrupt Select Register (IRQSS)

Bit	7	6	5	4	3	2	1	0
Field	Reserved	PA6CS	Reserved					
RESET	0	0	0	0	0	0	0	0
R/W	R/W	R/W	R/W	R/W	R/W	R/W	R/W	R/W
Address	FCEh							

Bit	Description
[7]	**Reserved** This bit is reserved and must be programmed to 0.
[6] PA6CS	**PA6/Comparator Selection** 0 = PA6 is used for the interrupt caused by PA6CS interrupt request. 1 = The comparator is used for the interrupt caused by PA6CS interrupt request.
[5:0]	**Reserved** These registers are reserved and must be programmed to 000000.

Interrupt Control Register

The Interrupt Control (IRQCTL) Register, shown in Table 49, contains the master enable bit for all interrupts.

Table 49. Interrupt Control Register (IRQCTL)

Bit	7	6	5	4	3	2	1	0
Field	IRQE	Reserved						
RESET	0	0	0	0	0	0	0	0
R/W	R/W	R	R	R	R	R	R	R
Address	FCFh							

Bit	Description
[7] IRQE	**Interrupt Request Enable** This bit is set to 1 by executing an Enable Interrupts (EI) or Interrupt Return (IRET) instruction or by a direct register write of 1 to this bit. It is reset to 0 by executing a DI instruction, eZ8 CPU acknowledgement of an interrupt request, reset, or by a direct register write of a 0 to this bit. 0 = Interrupts are disabled. 1 = Interrupts are enabled.
[6:0]	**Reserved** These registers are reserved and must be programmed to 0000000.

Timers

The Z8 Encore! F0830 Series products contain up to two 16-bit reloadable timers that can be used for timing, event counting or generation of pulse width modulated (PWM) signals. The timers feature include:

- 16-bit reload counter
- Programmable prescaler with prescale values ranging from 1 to 128
- PWM output generation
- Capture and compare capability
- External input pin for timer input, clock gating or capture signal. External input pin signal frequency is limited to a maximum of one-fourth the system clock frequency
- Timer output pin
- Timer interrupt

Architecture

Figure 10 displays the architecture of the timers.

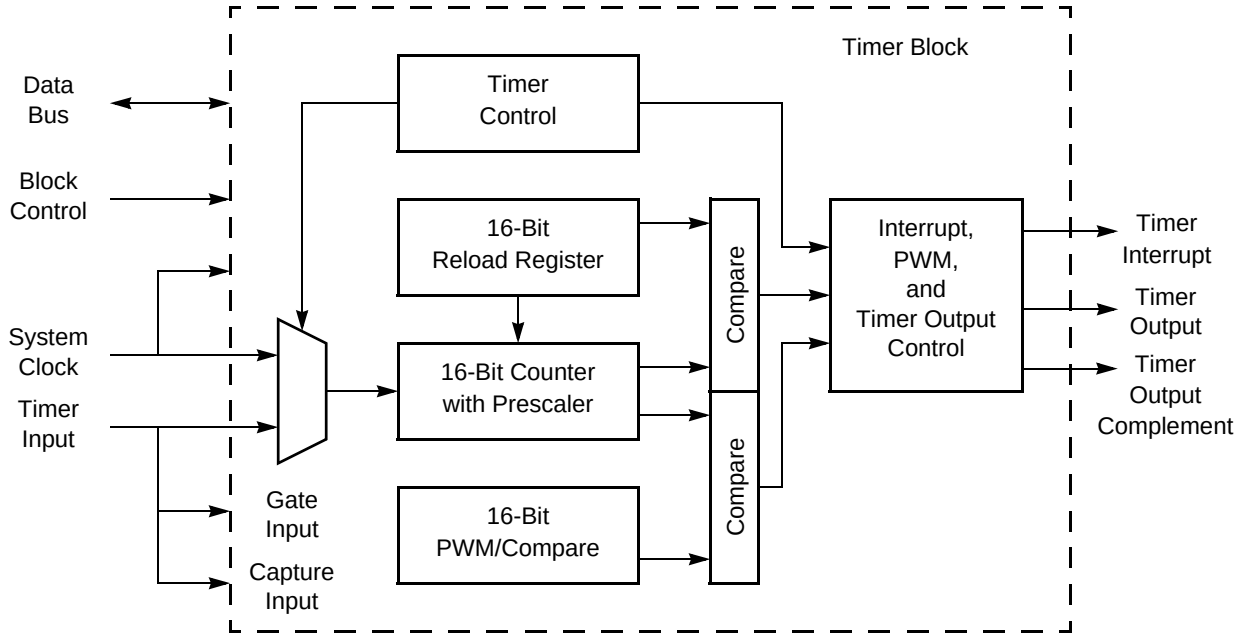

Figure 10. Timer Block Diagram

Operation

The timers are 16-bit up-counters. Minimum time-out delay is set by loading the value `0001h` into the Timer Reload High and Low Byte registers and setting the prescale value to 1. Maximum time-out delay is set by loading the value `0000h` into the Timer Reload High and Low Byte registers and setting the prescale value to 128. If the Timer reaches `FFFFh`, the timer resets back to `0000h` and continues counting.

Timer Operating Modes

The timers can be configured to operate in the following modes:

ONE-SHOT Mode

In ONE-SHOT Mode, the timer counts up to the 16-bit reload value stored in the Timer Reload High and Low Byte registers. The timer input is the system clock. Upon reaching the reload value, the timer generates an interrupt and the count value in the Timer High and Low Byte registers is reset to `0001h`. The timer is automatically disabled and stops counting.

Additionally, if the timer output alternate function is enabled, the timer output pin changes state for one system clock cycle (from Low to High or from High to Low) upon timer

reload. For the timer output to make a state change at a ONE-SHOT time-out (rather than a single cycle pulse), first set the TPOL bit in the Timer Control Register to the start value before enabling ONE-SHOT Mode. After starting the timer, set TPOL to the opposite bit value.

Observe the following steps for configuring a timer for ONE-SHOT Mode and for initiating the count:

1. Write to the Timer Control Register to:
   - Disable the timer
   - Configure the timer for ONE-SHOT Mode
   - Set the prescale value
   - Set the initial output level (High or Low) if using the timer output Alternate function
2. Write to the Timer High and Low Byte registers to set the starting count value.
3. Write to the Timer Reload High and Low Byte registers to set the reload value.
4. If appropriate, enable the timer interrupt and set the timer interrupt priority by writing to the relevant interrupt registers.
5. If using the timer output function, configure the associated GPIO port pin for the timer output alternate function.
6. Write to the Timer Control Register to enable the timer and initiate counting.

In ONE-SHOT Mode, the system clock always provides the timer input. The timer period is calculated with the following equation:

$$\text{One-Shot Mode Time-Out Period (s)} = \frac{(\text{Reload Value} - \text{Start Value}) \times \text{Prescale}}{\text{System Clock Frequency (Hz)}}$$

CONTINUOUS Mode

In CONTINUOUS Mode, the timer counts up to the 16-bit reload value stored in the Timer Reload High and Low Byte registers. The timer input is the system clock. Upon reaching the reload value, the timer generates an interrupt, the count value in the Timer High and Low Byte registers is reset to `0001h` and the counting resumes. Additionally, if the timer output alternate function is enabled, the timer output pin changes state (from Low to High or from High to Low) at timer reload.

Observe the following steps for configuring a timer for CONTINUOUS Mode and for initiating the count:

1. Write to the Timer Control Register to:

- Disable the timer
- Configure the timer for CONTINUOUS Mode
- Set the prescale value
- If using the timer output Alternate function, set the initial output level (High or Low)

2. Write to the Timer High and Low Byte registers to set the starting count value (usually `0001h`). This action only affects the first pass in CONTINUOUS Mode. After the first timer reload in CONTINUOUS Mode, counting always begins at the reset value of `0001h`.
3. Write to the Timer Reload High and Low Byte registers to set the reload value.
4. Enable the timer interrupt (if appropriate) and set the timer interrupt priority by writing to the relevant interrupt registers.
5. Configure the associated GPIO port pin (if using the timer output function) for the timer output alternate function.
6. Write to the Timer Control Register to enable the timer and initiate counting.

In CONTINUOUS Mode, the system clock always provides the timer input. The timer period is calculated with the following equation:

$$\text{Continuous Mode Time-Out Period (s)} = \frac{\text{Reload Value} \times \text{Prescale}}{\text{System Clock Frequency (Hz)}}$$

If an initial starting value other than `0001h` is loaded into the Timer High and Low Byte registers, use the ONE-SHOT Mode equation to determine the first time-out period.

COUNTER Mode

In COUNTER Mode, the timer counts input transitions from a GPIO port pin. The timer input is taken from the GPIO port pin: timer input alternate function. The TPOL bit in the Timer Control Register determines whether the count occurs on the rising edge or the falling edge of the timer input signal. In COUNTER Mode, the prescaler is disabled.

Caution: The input frequency of the timer input signal must not exceed one-fourth the system clock frequency.

Upon reaching the reload value stored in the Timer Reload High and Low Byte registers, the timer generates an interrupt, the count value in the Timer High and Low Byte registers is reset to `0001h` and counting resumes. Additionally, if the timer output alternate function

is enabled, the timer output pin changes state (from Low to High or from High to Low) at timer reload.

Observe the following steps for configuring a timer for COUNTER Mode and for initiating the count:

1. Write to the Timer Control Register to:
   - Disable the timer
   - Configure the timer for COUNTER Mode
   - Select either the rising edge or falling edge of the timer input signal for the count. This selection also sets the initial logic level (High or Low) for the timer output alternate function. However, the timer output function is not required to be enabled.
2. Write to the Timer High and Low Byte registers to set the starting count value. This only affects the first pass in COUNTER Mode. After the first timer reload in COUNTER Mode, counting always begins at the reset value `0001h`. In COUNTER Mode, the Timer High and Low Byte registers must be written with the value `0001h`.
3. Write to the Timer Reload High and Low Byte registers to set the reload value.
4. If appropriate, enable the timer interrupt and set the timer interrupt priority by writing to the relevant interrupt registers.
5. Configure the associated GPIO port pin for the timer input alternate function.
6. If using the timer output function, configure the associated GPIO port pin for the timer output alternate function.
7. Write to the Timer Control Register to enable the timer.

In COUNTER Mode, the number of timer input transitions is calculated with the following equation:

Counter Mode Timer Input Transitions = Current Count Value – Start Value

COMPARATOR COUNTER Mode

In COMPARATOR COUNTER Mode, the timer counts the input transitions from the analog comparator output. The TPOL bit in the Timer Control Register determines whether the count occurs on the rising edge or the falling edge of the comparator output signal. In COMPARATOR COUNTER Mode, the prescaler is disabled.

Caution: The frequency of the comparator output signal must not exceed one-fourth the system clock frequency.

After reaching the reload value stored in the Timer Reload High and Low Byte registers, the timer generates an interrupt, the count value in the Timer High and Low Byte registers is reset to `0001h` and counting resumes. Additionally, if the timer output alternate function is enabled, the timer output pin changes state (from Low to High or from High to Low) at timer reload.

Observe the following steps for configuring a timer for COMPARATOR COUNTER Mode and for initiating the count:

1. Write to the Timer Control Register to:
   - Disable the timer
   - Configure the timer for COMPARATOR COUNTER Mode.
   - Select either the rising edge or falling edge of the comparator output signal for the count. This also sets the initial logic level (High or Low) for the timer output alternate function. However, the timer output function is not required to be enabled.
2. Write to the Timer High and Low Byte registers to set the starting count value. This action only affects the first pass in COMPARATOR COUNTER Mode. After the first timer reload in COMPARATOR COUNTER Mode, counting always begins at the reset value `0001h`. Generally, in COMPARATOR COUNTER Mode, the Timer High and Low Byte registers must be written with the value `0001h`.
3. Write to the Timer Reload High and Low Byte registers to set the reload value.
4. If appropriate, enable the timer interrupt and set the timer interrupt priority by writing to the relevant interrupt registers.
5. If using the timer output function, configure the associated GPIO port pin for the timer output alternate function.
6. Write to the Timer Control Register to enable the timer.

In COMPARATOR COUNTER Mode, the number of comparator output transitions is calculated with the following equation:

Comparator Output Transitions = Current Count Value – Start Value

PWM SINGLE OUTPUT Mode

In PWM SINGLE OUTPUT Mode, the timer outputs a pulse width modulated (PWM) output signal through a GPIO port pin. The timer input is the system clock. The timer first counts up to 16-bit PWM match value stored in the timer PWM High and Low Byte registers. When the timer count value matches the PWM value, the timer output toggles. The timer continues counting until it reaches the reload value stored in the Timer Reload High and Low Byte registers. Upon reaching the reload value, the timer generates an interrupt, the count value in the Timer High and Low Byte registers is reset to `0001h` and counting resumes.

If the TPOL bit in the Timer Control Register is set to 1, the timer output signal begins as a High (1) and transitions to a Low (0) when the timer value matches the PWM value. The timer output signal returns to a High (1) after the timer reaches the reload value and is reset to `0001h`.

If the TPOL bit in the Timer Control Register is set to 0, the timer output signal begins as a Low (0) and transitions to a High (1) when the timer value matches the PWM value. The timer output signal returns to a Low (0) after the timer reaches the reload value and is reset to `0001h`.

Observe the following steps for configuring a timer for PWM SINGLE OUTPUT Mode and for initiating PWM operation:

1. Write to the Timer Control Register to:
   - Disable the timer
   - Configure the timer for PWM Mode
   - Set the prescale value
   - Set the initial logic level (High or Low) and PWM High/Low transition for the timer output alternate function
2. Write to the Timer High and Low Byte registers to set the starting count value (typically `0001h`). This value only affects the first pass in PWM Mode. After the first timer reset in PWM Mode, counting always begins at the reset value of `0001h`.
3. Write to the PWM High and Low Byte registers to set the PWM value.
4. Write to the Timer Reload High and Low Byte registers to set the reload value (PWM period). The reload value must be greater than the PWM value.
5. If appropriate, enable the timer interrupt and set the timer interrupt priority by writing to the relevant interrupt registers.
6. Configure the associated GPIO port pin for the timer output alternate function.
7. Write to the Timer Control Register to enable the timer and initiate counting.

The PWM period is represented by the following equation:

$$\text{PWM Period (s)} = \frac{\text{Reload Value} \times \text{Prescale}}{\text{System Clock Frequency (Hz)}}$$

If an initial starting value other than `0001h` is loaded into the Timer High and Low Byte registers, use the ONE-SHOT Mode equation to determine the first PWM time-out period.

If TPOL bit is set to 0, the ratio of the PWM output high time to the total period is represented by:

$$\text{PWM Output High Time Ratio (\%)} = \frac{\text{Reload Value} - \text{PWM Value}}{\text{Reload Value}} \times 100$$

If TPOL bit is set to 1, the ratio of the PWM output high time to the total period is represented by:

$$\text{PWM Output High Time Ratio (\%)} = \frac{\text{PWM Value}}{\text{Reload Value}} \times 100$$

PWM DUAL OUTPUT Mode

In PWM DUAL OUTPUT Mode, the timer outputs a PWM output signal pair (basic PWM signal and its complement) through two GPIO port pins. The timer input is the system clock. The timer first counts up to 16-bit PWM match value stored in the timer PWM High and Low Byte registers. When the timer count value matches the PWM value, the timer output toggles. The timer continues counting until it reaches the reload value stored in the Timer Reload High and Low Byte registers. Upon reaching the reload value, the timer generates an interrupt, the count value in the Timer High and Low Byte registers is reset to `0001h` and counting resumes.

If the TPOL bit in the Timer Control Register is set to 1, the timer output signal begins as a High (1) and transitions to a Low (0) when the timer value matches the PWM value. The timer output signal returns to a High (1) after the timer reaches the reload value and is reset to `0001h`.

If the TPOL bit in the Timer Control Register is set to 0, the timer output signal begins as a Low (0) and transitions to a High (1) when the timer value matches the PWM value. The timer output signal returns to a Low (0) after the timer reaches the reload value and is reset to `0001h`.

The timer also generates a second PWM output signal: the timer output complement. The timer output complement is the complement of the timer output PWM signal. A programmable deadband delay can be configured to time delay (0 to 128 system clock cycles) PWM output transitions on these two pins from a Low to a High (inactive to active) to ensure a time gap between the deassertion of one PWM output to the assertion of its complement.

Observe the following steps for configuring a timer for PWM DUAL OUTPUT Mode and for initiating the PWM operation:

1. Write to the Timer Control Register to:
   - Disable the timer
   - Configure the timer for PWM DUAL OUTPUT Mode; setting the mode also involves writing to TMODEHI bit in the TxCTL1 Register
   - Set the prescale value
   - Set the initial logic level (High or Low) and PWM High/Low transition for the timer output alternate function
2. Write to the Timer High and Low Byte registers to set the starting count value (typically `0001h`). This write only affects the first pass in PWM Mode. After the first timer reset in PWM Mode, counting always begins at the reset value of `0001h`.
3. Write to the PWM High and Low Byte registers to set the PWM value.
4. Write to the PWM Control Register to set the PWM deadband delay value. The deadband delay must be less than the duration of the positive phase of the PWM signal (as defined by the PWM High and Low Byte registers). It must also be less than the duration of the negative phase of the PWM signal (as defined by the difference between the PWM registers and the Timer Reload registers).
5. Write to the Timer Reload High and Low Byte registers to set the reload value (PWM period). The reload value must be greater than the PWM value.
6. If appropriate, enable the timer interrupt and set the timer interrupt priority by writing to the relevant interrupt registers.
7. Configure the associated GPIO port pin for the timer output and timer output complement alternate functions. The timer output complement function is shared with the timer input function for both timers. Setting the timer mode to DUAL PWM will automatically switch the function from timer-in to timer-out complement.
8. Write to the Timer Control Register to enable the timer and initiate counting.

The PWM period is represented by the following equation:

$$\text{PWM Period (s)} = \frac{\text{Reload Value} \times \text{Prescale}}{\text{System Clock Frequency (Hz)}}$$

If an initial starting value other than `0001h` is loaded into the Timer High and Low Byte registers, the ONE-SHOT Mode equation determines the first PWM time-out period.

If `TPOL` is set to 0, the ratio of the PWM output high time to the total period is represented by:

$$\text{PWM Output High Time Ratio (\%)} = \frac{\text{Reload Value} - \text{PWM Value}}{\text{Reload Value}} \times 100$$

If `TPOL` is set to 1, the ratio of the PWM output high time to the total period is represented by:

$$\text{PWM Output High Time Ratio (\%)} = \frac{\text{PWM Value}}{\text{Reload Value}} \times 100$$

CAPTURE Mode

In CAPTURE Mode, the current timer count value is recorded when the appropriate external timer input transition occurs. The capture count value is written to the timer PWM High and Low Byte registers. The timer input is the system clock. The TPOL bit in the Timer Control Register determines if the capture occurs on a rising edge or a falling edge of the timer input signal.

When the capture event occurs, an interrupt is generated and the timer continues counting. The INPCAP bit in the TxCTL1 Register is set to indicate the timer interrupt because of an input capture event.

The timer continues counting up to the 16-bit reload value stored in the Timer Reload High and Low Byte registers. Upon reaching the reload value, the timer generates an interrupt and continues counting. The INPCAP bit in the TxCTL1 Register clears, indicating that the timer interrupt has not occurred because of an input capture event.

Observe the following steps for configuring a timer for CAPTURE Mode and initiating the count:

1. Write to the Timer Control Register to:
   - Disable the timer
   - Configure the timer for CAPTURE Mode
   - Set the prescale value
   - Set the capture edge (rising or falling) for the timer input
2. Write to the Timer High and Low Byte registers to set the starting count value (typically `0001h`).
3. Write to the Timer Reload High and Low Byte registers to set the reload value.
4. Clear the timer PWM High and Low Byte registers to `0000h`. Clearing these registers allows user software to determine if interrupts were generated either by a capture event or by a reload. If the PWM High and Low Byte registers still contain `0000h` after the interrupt, the interrupt were generated by a reload.

5. Enable the timer interrupt, if appropriate and set the timer interrupt priority by writing to the relevant interrupt registers. By default, the timer interrupt is generated for both input capture and Reload events. If appropriate, configure the timer interrupt to be generated only at the input capture event or the reload event by setting the TICONFIG field of the TxCTL1 Register.
6. Configure the associated GPIO port pin for the timer input alternate function.
7. Write to the Timer Control Register to enable the timer and initiate counting.

In CAPTURE Mode, the elapsed time between the timer start and the capture event can be calculated using the following equation:

$$\text{Capture Elapsed Time (s)} = \frac{(\text{Capture Value} - \text{Start Value}) \times \text{Prescale}}{\text{System Clock Frequency (Hz)}}$$

CAPTURE RESTART Mode

In CAPTURE RESTART Mode, the current timer count value is recorded when the acceptable external timer input transition occurs. The capture count value is written to the timer PWM High and Low Byte registers. The timer input is the system clock. The TPOL bit in the Timer Control Register determines whether the capture occurs on a rising edge or a falling edge of the timer input signal. When the capture event occurs, an interrupt is generated and the count value in the Timer High and Low Byte registers is reset to `0001h` and counting resumes. The INPCAP bit in the TxCTL1 Register is set to indicate that the timer interrupt has been caused by an input capture event.

If no capture event occurs, the timer counts up to 16-bit compare value stored in the Timer Reload High and Low Byte registers. Upon reaching the reload value, the timer generates an interrupt, the count value in the Timer High and Low Byte registers is reset to `0001h` and counting resumes. The INPCAP bit in the TxCTL1 Register is cleared to indicate that the timer interrupt has not been caused by an input capture event.

Observe the following steps for configuring a timer for CAPTURE RESTART Mode and for initiating the count:

1. Write to the Timer Control Register to:
   - Disable the timer
   - Configure the timer for CAPTURE RESTART Mode; setting the mode also involves writing to TMODEHI bit in the TxCTL1 Register
   - Set the prescale value
   - Set the capture edge (rising or falling) for the timer input
2. Write to the Timer High and Low Byte registers to set the starting count value (typically `0001h`).

3. Write to the Timer Reload High and Low Byte registers to set the reload value.
4. Clear the timer PWM High and Low Byte registers to `0000h`. This allows user software to determine if interrupts are generated by either a capture event or a reload. If the PWM High and Low Byte registers still contain `0000h` after the interrupt, the interrupt were generated by a reload.
5. Enable the timer interrupt, if appropriate and set the timer interrupt priority by writing to the relevant interrupt registers. By default, the timer interrupt is generated for both input capture and Reload events. The user can configure the timer interrupt to be generated only at the input capture event or the reload event by setting the TICONFIG field of the TxCTL1 Register.
6. Configure the associated GPIO port pin for the timer input alternate function.
7. Write to the Timer Control Register to enable the timer and initiate counting.

In CAPTURE Mode, the elapsed time between the timer start and the capture event can be calculated using the following equation:

$$\text{Capture Elapsed Time (s)} = \frac{(\text{Capture Value} - \text{Start Value}) \times \text{Prescale}}{\text{System Clock Frequency (Hz)}}$$

COMPARE Mode

In COMPARE Mode, the timer counts up to 16-bit maximum compare value stored in the Timer Reload High and Low Byte registers. The timer input is the system clock. Upon reaching the compare value, the timer generates an interrupt and counting continues (the timer value is not reset to `0001h`). Additionally, if the timer output alternate function is enabled, the timer output pin changes state (from Low to High or from High to Low) upon compare.

If the timer reaches `FFFFh`, the timer resets to `0000h` and continues counting.

Observe the following steps for configuring a timer for COMPARE Mode and for initiating the count:

1. Write to the Timer Control Register to:
   - Disable the timer
   - Configure the timer for COMPARE Mode
   - Set the prescale value
   - Set the initial logic level (High or Low) for the timer output alternate function
2. Write to the Timer High and Low Byte registers to set the starting count value.
3. Write to the Timer Reload High and Low Byte registers to set the compare value.

4. Enable the timer interrupt and set the timer interrupt priority by writing to the relevant interrupt registers.
5. If using the timer output function, configure the associated GPIO port pin for the timer output alternate function.
6. Write to the Timer Control Register to enable the timer and initiate counting.

In COMPARE Mode, the system clock always provides the timer input. The compare time can be calculated by the following equation:

$$\text{Compare Mode Time (s)} = \frac{(\text{Compare Value} - \text{Start Value}) \times \text{Prescale}}{\text{System Clock Frequency (Hz)}}$$

GATED Mode

In GATED Mode, the timer counts only when the timer input signal is in its active state (asserted), as determined by the TPOL bit in the Timer Control Register. When the timer input signal is asserted, counting begins. A timer interrupt is generated when the timer input signal is deasserted or a timer reload occurs. To determine whether the timer input signal deassertion generated the interrupt, read the associated GPIO input value and compare to the value stored in the TPOL bit.

The timer counts up to the 16-bit reload value stored in the Timer Reload High and Low Byte registers. The timer input is the system clock. Upon reaching the reload value, the timer generates an interrupt, the count value in the Timer High and Low Byte registers is reset to `0001h` and counting resumes (assuming the timer input signal remains asserted). Additionally, if the timer output alternate function is enabled, the timer output pin changes state (from Low to High or from High to Low) at timer reset.

Observe the following steps for configuring a timer for GATED Mode and for initiating the count:

1. Write to the Timer Control Register to:
   - Disable the timer
   - Configure the timer for GATED Mode
   - Set the prescale value
2. Write to the Timer High and Low Byte registers to set the starting count value. Writing these registers only affects the first pass in GATED Mode. After the first timer reset in GATED Mode, counting always begins at the reset value of `0001h`.
3. Write to the Timer Reload High and Low Byte registers to set the reload value.
4. Enable the timer interrupt and set the timer interrupt priority by writing to the relevant interrupt registers. By default, the timer interrupt is generated for both input deasser-

tion and reload events. The user can configure the timer interrupt to be generated only at the input deassertion event or the reload event by setting the TICONFIG field of the TxCTL1 Register.

5. Configure the associated GPIO port pin for the timer input alternate function.
6. Write to the Timer Control Register to enable the timer.
7. Assert the timer input signal to initiate the counting.

CAPTURE/COMPARE Mode

In CAPTURE/COMPARE Mode, the timer begins counting on the first external timer input transition. The acceptable transition (rising edge or falling edge) is set by the TPOL bit in the Timer Control Register. The timer input is the system clock.

Every subsequent acceptable transition (after the first) of the timer input signal, captures the current count value. The capture value is written to the timer PWM High and Low Byte registers. When the capture event occurs, an interrupt is generated, the count value in the Timer High and Low Byte registers is reset to `0001h` and the counting resumes. The INPCAP bit in the TxCTL1 Register is set to indicate that the timer interrupt is caused by an input capture event.

If no capture event occurs, the timer counts up to the 16-bit compare value stored in the Timer Reload High and Low Byte registers. Upon reaching the compare value, the timer generates an interrupt, the count value in the Timer High and Low Byte registers is reset to `0001h` and counting resumes. The INPCAP bit in the TxCTL1 Register is cleared to indicate that the timer interrupt has not been caused by an input capture event.

Observe the following steps for configuring a timer for CAPTURE/COMPARE Mode and for initiating the count:

1. Write to the Timer Control Register to:
   - Disable the timer
   - Configure the timer for CAPTURE/COMPARE Mode.
   - Set the prescale value.
   - Set the capture edge (rising or falling) for the timer input.
2. Write to the Timer High and Low Byte registers to set the starting count value (typically `0001h`).
3. Write to the Timer Reload High and Low Byte registers to set the compare value.
4. Enable the timer interrupt and set the timer interrupt priority by writing to the relevant interrupt registers.By default, the timer interrupt are generated for both input capture and Reload events. The user can configure the timer interrupt to be generated only at the input capture event or the reload event by setting TICONFIG field of the TxCTL1 Register.
5. Configure the associated GPIO port pin for the timer input alternate function.

6. Write to the Timer Control Register to enable the timer.
7. Counting begins on the first appropriate transition of the timer input signal. No interrupt is generated by the first edge.

In CAPTURE/COMPARE Mode, the elapsed time from timer start to capture event can be calculated using the following equation:

$$\text{Capture Elapsed Time (s)} = \frac{(\text{Capture Value} - \text{Start Value}) \times \text{Prescale}}{\text{System Clock Frequency (Hz)}}$$

Reading the Timer Count Values

The current count value in the timers can be read while counting (enabled). This capability has no effect on Timer operation. When the timer is enabled and the Timer High Byte Register is read, the contents of the timer low byte register are placed in a holding register. A subsequent read from the timer low byte register returns the value in the holding register. This operation allows accurate reads of the full 16-bit timer count value when enabled. When the timers are not enabled, a read from the timer low byte register returns the actual value in the counter.

Timer Pin Signal Operation

Timer output is a GPIO port pin alternate function. The timer output is toggled every time the counter is reloaded.

The timer input can be used as a selectable counting source. It shares the same pin as the complementary timer output. When selected by the GPIO alternate function registers, this pin functions as a timer input in all modes except for the DUAL PWM OUTPUT Mode. For this mode, no timer input is available.

Timer Control Register Definitions

This section defines the features of the following Timer Control registers.

Timer 0–1 High and Low Byte Registers: see page 83

Timer Reload High and Low Byte Registers: see page 85

Timer 0–1 PWM High and Low Byte Registers: see page 86

Timer 0–1 Control Registers: see page 87

Timer 0–1 High and Low Byte Registers

The Timer 0–1 High and Low Byte (TxH and TxL) registers, shown in Tables 50 and 51, contain the current 16-bit timer count value. When the timer is enabled, a read from TxH causes the value in TxL to be stored in a temporary holding register. A read from TxL always returns this temporary register content when the timer is enabled; however, when the timer is disabled, a read from the TxL reads the TxL Register content directly.

Writing to the Timer High and Low Byte registers while the timer is enabled is not recommended. There are no temporary holding registers available for write operations; therefore, simultaneous 16-bit writes are not possible. If either the timer High or Low Byte registers are written during counting, the 8-bit written value is placed in the counter (High or Low byte) at the next clock edge. The counter continues counting from the new value.

Table 50. Timer 0–1 High Byte Register (TxH)

Bit	7	6	5	4	3	2	1	0
Field	TH							
RESET	0	0	0	0	0	0	0	0
R/W	R/W	R/W	R/W	R/W	R/W	R/W	R/W	R/W
Address	F00h, F08h							

Table 51. Timer 0–1 Low Byte Register (TxL)

Bit	7	6	5	4	3	2	1	0
Field	TL							
RESET	0	0	0	0	0	0	0	1
R/W	R/W	R/W	R/W	R/W	R/W	R/W	R/W	R/W
Address	F01h, F09h							

Bit	Description
[7:0] TH, TL	**Timer High and Low Bytes** These 2 bytes, {TH[7:0], TL[7:0]}, contain the current 16-bit timer count value.

Timer Reload High and Low Byte Registers

The Timer 0–1 Reload High and Low Byte (TxRH and TxRL) registers, shown in Tables 52 and 53, store a 16-bit reload value, {TRH[7:0], TRL[7:0]}. Values written to the Timer Reload High Byte Register are stored in a temporary holding register. When a write to the Timer Reload Low Byte Register occurs, the temporary holding register value is written to the Timer High Byte Register. This operation allows simultaneous updates of the 16-bit timer reload value. In COMPARE Mode, the Timer Reload High and Low Byte registers store the 16-bit compare value.

Table 52. Timer 0–1 Reload High Byte Register (TxRH)

Bit	7	6	5	4	3	2	1	0
Field	TRH							
RESET	1	1	1	1	1	1	1	1
R/W	R/W	R/W	R/W	R/W	R/W	R/W	R/W	R/W
Address	F02h, F0Ah							

Table 53. Timer 0–1 Reload Low Byte Register (TxRL)

Bit	7	6	5	4	3	2	1	0
Field	TRL							
RESET	1	1	1	1	1	1	1	1
R/W	R/W	R/W	R/W	R/W	R/W	R/W	R/W	R/W
Address	F03h, F0Bh							

Bit	Description
[7:0] TRH, TRL	**Timer Reload Register High and Low** These two bytes form the 16-bit reload value, {TRH[7:0], TRL[7:0]}. This value sets the maximum count value, which initiates a timer reload to `0001h`. In COMPARE Mode, these two bytes form the 16-bit compare value.

Timer 0–1 PWM High and Low Byte Registers

The Timer 0–1 PWM High and Low Byte (TxPWMH and TxPWML) registers, shown in Tables 54 and 55, control PWM operations. These registers also store the capture values for the CAPTURE and CAPTURE/COMPARE modes.

Table 54. Timer 0–1 PWM High Byte Register (TxPWMH)

Bit	7	6	5	4	3	2	1	0
Field	PWMH							
RESET	0	0	0	0	0	0	0	0
R/W	R/W	R/W	R/W	R/W	R/W	R/W	R/W	R/W
Address	F04h, F0Ch							

Table 55. Timer 0–1 PWM Low Byte Register (TxPWML)

Bit	7	6	5	4	3	2	1	0
Field	PWML							
RESET	0	0	0	0	0	0	0	0
R/W	R/W	R/W	R/W	R/W	R/W	R/W	R/W	R/W
Address	F05h, F0Dh							

Bit	Description
[7:0] PWMH, PWML	**Pulse Width Modulator High and Low Bytes** These two bytes, {PWMH[7:0], PWML[7:0]}, form a 16-bit value that is compared to the current 16-bit timer count. When a match occurs, the PWM output changes state. The PWM output value is set by the TPOL bit in the Timer Control Register (TxCTL1). The TxPWMH and TxPWML registers also store the 16-bit captured timer value when operating in capture or CAPTURE/COMPARE modes.

Timer 0–1 Control Registers

The Timer Control registers are 8-bit read/write registers that control the operation of their associated counter/timers.

Time 0–1 Control Register 0

The Timer Control 0 (TxCTL0) and Timer Control 1 (TxCTL1) registers determine the timer operating mode. These registers also include a programmable PWM deadband delay, two bits to configure the timer interrupt definition, and a status bit to identify if the most recent timer interrupt is caused by an input capture event.

Table 56. Timer 0–1 Control Register 0 (TxCTL0)

Bit	7	6	5	4	3	2	1	0
Field	TMODEHI	TICONFIG		Reserved	PWMD			INPCAP
RESET	0	0	0	0	0	0	0	0
R/W	R/W	R/W	R/W	R/W	R/W	R/W	R/W	R/W
Address	F06h, F0Eh							

Bit	Description
[7] TMODEHI	**Timer Mode High Bit** This bit along with the TMODE field in the TxCTL1 Register determines the operating mode of the timer. This is the most significant bit of the timer mode selection value. See the TxCTL1 Register description on the next page for additional details.
[6:5] TICONFIG	**Timer Interrupt Configuration** This field configures timer interrupt definition. 0x = Timer interrupt occurs on all of the defined reload, compare and input events. 10 = Timer interrupt occurs only on defined input capture/deassertion events. 11 = Timer interrupt occurs only on defined reload/compare events.
[4]	**Reserved** This bit is reserved and must be programmed to 0.
[3:1] PWMD	**PWM Delay Value** This field is a programmable delay to control the number of system clock cycles delay before the timer output and the timer output complement are forced to their Active state. 000 = No delay. 001 = 2 cycles delay. 010 = 4 cycles delay. 011 = 8 cycles delay. 100 = 16 cycles delay. 101 = 32 cycles delay. 110 = 64 cycles delay. 111 = 128 cycles delay.

Bit	Description (Continued)
[0] INPCAP	**Input Capture Event** This bit indicates whether the most recent timer interrupt is caused by a timer input capture event. 0 = Previous timer interrupt is not caused by timer input capture event. 1 = Previous timer interrupt is caused by timer input capture event.

Timer 0–1 Control Register 1

The Timer 0–1 Control (TxCTL1) registers enable/disable the timers, set the prescaler value, and determine the timer operating mode.

Table 57. Timer 0–1 Control Register 1 (TxCTL1)

Bit	7	6	5	4	3	2	1	0
Field	TEN	TPOL	PRES			TMODE		
RESET	0	0	0	0	0	0	0	0
R/W	R/W	R/W	R/W	R/W	R/W	R/W	R/W	R/W
Address	F07h, F0Fh							

Bit	Description
[7] TEN	**Timer Enable** 0 = Timer is disabled. 1 = Timer enabled to count.

Bit	Description (Continued)
[6] TPOL	**Timer Input/Output Polarity** Operation of this bit is a function of the current operating mode of the timer. **ONE-SHOT Mode** When the timer is disabled, the timer output signal is set to the value of this bit. When the timer is enabled, the timer output signal is complemented on timer reload. **CONTINUOUS Mode** When the timer is disabled, the timer output signal is set to the value of this bit. When the timer is enabled and reloaded, the timer output signal is complemented. **COUNTER Mode** If the timer is disabled, the timer output signal is set to the value of this bit. If the timer is enabled the timer output signal is complemented after timer reload. 0 = Count occurs on the rising edge of the timer input signal. 1 = Count occurs on the falling edge of the timer input signal. **PWM SINGLE OUTPUT Mode** 0 = Timer output is forced Low (0), when the timer is disabled. The timer output is forced High (1) when the timer is enabled and the PWM count matches and the timer output is forced Low (0) when the timer is enabled and reloaded. 1 = Timer output is forced High (1), when the timer is disabled. The timer output is forced low(0), when the timer is enabled and the PWM count matches and forced High (1) when the timer is enabled and reloaded. **CAPTURE Mode** 0 = Count is captured on the rising edge of the timer input signal. 1 = Count is captured on the falling edge of the timer input signal. **COMPARE Mode** When the timer is disabled, the timer output signal is set to the value of this bit. When the timer is enabled and reloaded, the timer output signal is complemented. **GATED Mode** 0 = Timer counts when the timer input signal is High (1) and interrupts are generated on the falling edge of the timer input. 1 = Timer counts when the timer input signal is Low (0) and interrupts are generated on the rising edge of the timer input. **CAPTURE/COMPARE Mode** 0 = Counting is started on the first rising edge of the timer input signal. The current count is captured on subsequent rising edges of the timer input signal. 1 = Counting is started on the first falling edge of the timer input signal. The current count is captured on subsequent falling edges of the timer input signal.

Bit	Description (Continued)
[6] TPOL (cont'd)	**PWM DUAL OUTPUT Mode** 0 = Timer output is forced Low (0) and timer output complement is forced High (1), when the timer is disabled. When enabled and the PWM count matches, the timer output is forced High (1) and forced Low (0) when enabled and reloaded. When enabled and the PWM count matches, the timer output complement is forced Low (0) and forced High (1) when enabled and reloaded. 1 = Timer output is forced High (1) and timer output complement is forced Low (0) when the timer is disabled. When enabled and the PWM count matches, the timer output is forced Low (0) and forced High (1) when enabled and reloaded.When enabled and the PWM count matches, the timer output complement is forced High (1) and forced Low (0) when enabled and reloaded. The PWMD field in the TxCTL0 register determines an optional added delay on the assertion (Low to High) transition of both timer output and timer output complement for deadband generation. **CAPTURE RESTART Mode** 0 = Count is captured on the rising edge of the timer input signal. 1 = Count is captured on the falling edge of the timer input signal. **COMPARATOR COUNTER Mode** When the timer is disabled, the timer output signal is set to the value of this bit. When the timer is enabled, the timer output signal is complemented on timer reload. **Caution:** When the timer output alternate function TxOUT on a GPIO port pin is enabled, TxOUT will change to whatever state the TPOL bit is in. The timer does not need to be enabled for that to happen. Additionally, the port data direction sub register is not needed to be set to output on TxOUT. Changing the TPOL bit when the timer is enabled and running does not immediately change the polarity TxOUT.
[5:3] PRES	**Prescale Value** The timer input clock is divided by 2^{PRES}, where PRES can be set from 0 to 7. The prescaler is reset each time the timer is disabled. This reset ensures proper clock division each time the timer is restarted. 000 = Divide by 1. 001 = Divide by 2. 010 = Divide by 4. 011 = Divide by 8. 100 = Divide by 16. 101 = Divide by 32. 110 = Divide by 64. 111 = Divide by 128.

Bit	Description (Continued)
[2:0] TMODE	**Timer Mode** This field along with the TMODEHI bit in TxCTL0 register determines the operating mode of the timer. TMODEHI is the most significant bit of the timer mode selection value. 0000 = ONE-SHOT Mode. 0001 = CONTINUOUS Mode. 0010 = COUNTER Mode. 0011 = PWM SINGLE OUTPUT Mode. 0100 = CAPTURE Mode. 0101 = COMPARE Mode. 0110 = GATED Mode. 0111 = CAPTURE/COMPARE Mode. 1000 = PWM DUAL OUTPUT Mode. 1001 = CAPTURE RESTART Mode. 1010 = COMPARATOR COUNTER Mode.

Watchdog Timer

The Watchdog Timer (WDT) protects from corrupted or unreliable software, power faults and other system-level problems which can place the Z8 Encore! F0830 Series devices into unsuitable operating states. The features of the Watchdog Timer include:

- On-chip RC oscillator
- A selectable time-out response: reset or interrupt
- 24-bit programmable time-out value

Operation

The Watchdog Timer is a retriggerable one-shot timer that resets or interrupts the Z8 Encore! F0830 Series devices when the WDT reaches its terminal count. The WDT uses a dedicated on-chip RC oscillator as its clock source. The WDT operates only in two modes: ON and OFF. Once enabled, it always counts and must be refreshed to prevent a time-out. Perform an enable by executing the WDT instruction or by setting the WDT_AO Flash option bit. The WDT_AO bit forces the WDT to operate immediately on reset, even if a WDT instruction has not been executed.

The Watchdog Timer is a 24-bit reloadable downcounter that uses three 8-bit registers in the eZ8 CPU register space to set the reload value. The nominal WDT time-out period is calculated using the following equation:

$$\text{WDT Time-out Period (ms)} = \frac{\text{WDT Reload Value}}{10}$$

where the WDT reload value is the 24-bit decimal value provided by {WDTU[7:0], WDTH[7:0], WDTL[7:0]} and the typical Watchdog Timer RC oscillator frequency is 10KHz. The Watchdog Timer cannot be refreshed after it reaches `000002h`. The WDT reload value must not be set to values below `000004h`. Table 58 provides information about approximate time-out delays for the minimum and maximum WDT reload values.

Table 58. Watchdog Timer Approximate Time-Out Delays

WDT Reload Value (Hex)	WDT Reload Value (Decimal)	Approximate Time-Out Delay (with 10KHz Typical WDT Oscillator Frequency)	
		Typical	Description
000004	4	400µs	Minimum time-out delay
000400	1024	102ms	Default time-out delay
FFFFFF	16,777,215	28 minutes	Maximum time-out delay

Watchdog Timer Refresh

Upon first enable, the Watchdog Timer is loaded with the value in the Watchdog Timer Reload registers. The Watchdog Timer counts down to `000000h` unless a WDT instruction is executed by the eZ8 CPU. Execution of the WDT instruction causes the downcounter to be reloaded with the WDT reload value stored in the Watchdog Timer Reload registers. Counting resumes following the Reload operation.

When the Z8 Encore! F0830 Series devices are operating in DEBUG Mode (using the On-Chip Debugger), the Watchdog Timer must be continuously refreshed to prevent any WDT time-outs.

Watchdog Timer Time-Out Response

The Watchdog Timer times out when the counter reaches `000000h`. A time-out of the Watchdog Timer generates either an interrupt or a system reset. The WDT_RES Flash option bit determines the time-out response of the Watchdog Timer. See the Flash Option Bits chapter on page 124 for information about programming the WDT_RES Flash option bit.

WDT Interrupt in Normal Operation

If configured to generate an interrupt when a time-out occurs, the Watchdog Timer issues an interrupt request to the Interrupt Controller and sets the WDT status bit in the Reset Status Register. If interrupts are enabled, the eZ8 CPU responds to the interrupt request by fetching the Watchdog Timer interrupt vector and executing code from the vector address. After time-out and interrupt generation, the Watchdog Timer counter resets to its maximum value of `FFFFFh` and continues counting. The Watchdog Timer counter will not automatically return to its reload value.

The Reset Status Register (see Table 12 on page 29) must be read before clearing the WDT interrupt. This read clears the WDT time-out flag and prevents further WDT interrupts occurring immediately.

WDT Interrupt in Stop Mode

If configured to generate an interrupt when a time-out occurs and the Z8 Encore! F0830 Series devices are in Stop Mode, the Watchdog Timer automatically initiates a Stop Mode Recovery and generates an interrupt request. Both the WDT status bit and the STOP bit in the Watchdog Timer Control Register are set to 1 following a WDT time-out in Stop Mode. See the Reset and Stop Mode Recovery chapter on page 21 for more information about Stop Mode Recovery operations.

If interrupts are enabled, following completion of the Stop Mode Recovery, the eZ8 CPU responds to the interrupt request by fetching the Watchdog Timer interrupt vector and executes the code from the vector address.

WDT Reset in Normal Operation

If configured to generate a reset when a time-out occurs, the Watchdog Timer forces the device into the System Reset state. The WDT status bit in the Watchdog Timer Control Register is set to 1. See the Reset and Stop Mode Recovery chapter on page 21 for more information about system reset operations.

WDT Reset in Stop Mode

If configured to generate a reset when a time-out occurs and the device is in Stop Mode, the Watchdog Timer initiates a Stop Mode Recovery. Both the WDT status bit and the STOP bit in the Watchdog Timer Control Register are set to 1 following WDT time-out in Stop Mode. See the Reset and Stop Mode Recovery chapter on page 21 for more information about Stop Mode Recovery operations.

Watchdog Timer Reload Unlock Sequence

Writing the unlock sequence to the Watchdog Timer (WDTCTL) Control Register address, unlocks the three Watchdog Timer Reload Byte registers (WDTU, WDTH and WDTL) to allow changes to the time-out period. These write operations to the WDTCTL Register address produce no effect on the bits in the WDTCTL Register. The locking mechanism prevents spurious writes to the reload registers.

The following sequence is required to unlock the Watchdog Timer Reload Byte registers (WDTU, WDTH and WDTL) for write access:

1. Write `55h` to the Watchdog Timer Control Register (WDTCTL).
2. Write `AAh` to the Watchdog Timer Control Register (WDTCTL).
3. Write the Watchdog Timer Reload Upper Byte Register (WDTU).
4. Write the Watchdog Timer Reload High Byte Register (WDTH).
5. Write the Watchdog Timer Reload Low Byte Register (WDTL).

All three Watchdog Timer Reload registers must be written in the order listed above. There must be no other register writes between each of these operations. If a register write occurs, the lock state machine resets and no further writes can occur unless the sequence is restarted. The value in the Watchdog Timer Reload registers is loaded into the counter when the Watchdog Timer is first enabled and every time a WDT instruction is executed.

Watchdog Timer Control Register Definitions

This section defines the features of the following Watchdog Timer Control registers.

Watchdog Timer Control Register (WDTCTL): see page 95

Watchdog Timer Reload Low Byte Register (WDTL): see page 97

Watchdog Timer Reload Upper Byte Register (WDTU): see page 96

Watchdog Timer Reload High Byte Register (WDTH): see page 96

Watchdog Timer Control Register

The Watchdog Timer Control (WDTCTL) Register is a write-only control register. Writing the unlock sequence: 55h, AAh to the WDTCTL Register address unlocks the three Watchdog Timer Reload Byte registers (WDTU, WDTH and WDTL) to allow changes to the time-out period. These write operations to the WDTCTL Register address have no effect on the bits in the WDTCTL Register. The locking mechanism prevents spurious writes to the reload registers.

This register address is shared with the read-only Reset Status Register.

Table 59. Watchdog Timer Control Register (WDTCTL)

Bit	7	6	5	4	3	2	1	0
Field	WDTUNLK							
RESET	X	X	X	X	X	X	X	X
R/W	W	W	W	W	W	W	W	W
Address	FF0h							

Bit	Description
[7:0] WDTUNLK	**Watchdog Timer Unlock** The user software must write the correct unlocking sequence to this register before it is allowed to modify the contents of the Watchdog Timer Reload registers.

Watchdog Timer Reload Upper, High and Low Byte Registers

The Watchdog Timer Reload Upper, High and Low Byte (WDTU, WDTH, WDTL) registers, shown in Tables 60 through 62, form the 24-bit reload value that is loaded into the Watchdog Timer when a WDT instruction executes. This 24-bit value ranges across bits [23:0] to encompass the three bytes {WDTU[7:0], WDTH[7:0], WDTL[7:0]}. Writing to these registers sets the appropriate reload value; reading from these registers returns the current Watchdog Timer count value.

Caution: The 24-bit WDT reload value must not be set to a value less than `000004h`.

Table 60. Watchdog Timer Reload Upper Byte Register (WDTU)

Bit	7	6	5	4	3	2	1	0
Field	WDTU							
RESET	0	0	0	0	0	0	0	0
R/W	R/W*	R/W*	R/W*	R/W*	R/W*	R/W*	R/W*	R/W*
Address	FF1h							
Note: *A read returns the current WDT count value; a write sets the appropriate reload value.								

Bit	Description
[7:0] WDTU	**WDT Reload Upper Byte** Most significant byte (MSB), Bits[23:16], of the 24-bit WDT reload value.

Table 61. Watchdog Timer Reload High Byte Register (WDTH)

Bit	7	6	5	4	3	2	1	0
Field	WDTH							
RESET	0	0	0	0	0	1	0	0
R/W	R/W*	R/W*	R/W*	R/W*	R/W*	R/W*	R/W*	R/W*
Address	FF2h							
Note: *A read returns the current WDT count value; a write sets the appropriate reload value.								

Bit	Description
[7:0] WDTH	**WDT Reload High Byte** Middle byte, bits[15:8] of the 24-bit WDT reload value.

Table 62. Watchdog Timer Reload Low Byte Register (WDTL)

Bit	7	6	5	4	3	2	1	0
Field	WDTL							
RESET	0	0	0	0	0	0	0	0
R/W	R/W*	R/W*	R/W*	R/W*	R/W*	R/W*	R/W*	R/W*
Address	FF3h							
Note: *A read returns the current WDT count value; a write sets the appropriate reload value.								

Bit	Description
[7:0] WDTL	**WDT Reload Low** Least significant byte (LSB), bits[7:0] of the 24-bit WDT reload value.

Analog-to-Digital Converter

The Z8 Encore! MCU includes an eight-channel Successive Approximation Register (SAR) Analog-to-Digital Converter (ADC). The ADC converts an analog input signal to a 10-bit binary number. The features of the SAR ADC include:

- Eight analog input sources multiplexed with general purpose I/O ports
- Fast conversion time, less than 11.9 µs
- Programmable timing controls
- Interrupt on conversion complete
- Internal voltage reference generator
- Ability to select external reference voltage
- When configuring an ADC using external V_{REF}, PB5 is used as V_{REF} in the 28-pin package

Architecture

The ADC architecture, displayed in Figure 11, consists of an 8-input multiplexer, sample-and-hold amplifier and 10-bit SAR ADC. The ADC digitizes the signal on a selected channel and stores the digitized data in the ADC data registers. In an environment with high electrical noise, an external RC filter must be added at the input pins to reduce high-frequency noise.

$T_{CONV} = T_{S/H} + T_{CON}$

$T_{CONV} = T_S + T_H + 13 * SCLK * 16$

where:

SCLK = System Clock

T_{CONV} = Total conversion time

T_S = Sample time (SCLK * ADCST)

T_{CON} = Conversion time (13 * SCLK * 16)

T_H = Hold time (SCLK * ADCSST)

DIV = 16 (fixed to divide by 16 for F0830 Series products)

Example: For an F0830 Series MCU running @ 20 MHz:

$T_{CONV} = 1\mu s + 0.5\mu s + 13 * SCLK * DIV$

$T_{CONV} = 1\,\mu s + 0.5\,\mu s + 13 * (1/20\,MHz) * 16 = 11.9\,\mu s$

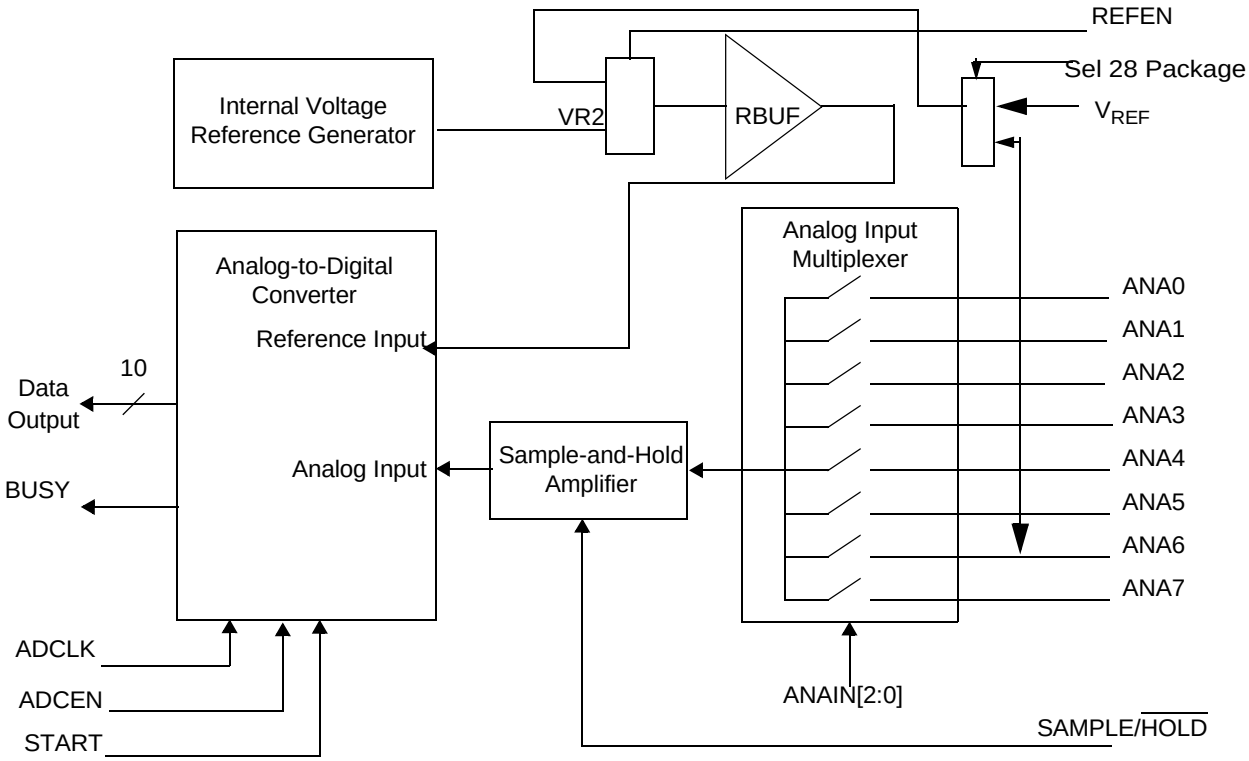

Figure 11. Analog-to-Digital Converter Block Diagram

Operation

The ADC converts the analog input, ANA_X, to a 10-bit digital representation. The equation for calculating the digital value is represented by:

$$ADCOutput = 1024 \times (ANA_X \div V_{REF})$$

Assuming zero gain and offset errors, any voltage outside the ADC input limits of AV_{SS} and V_{REF} returns all 0s or 1s, respectively. A new conversion can be initiated by a software to the ADC Control Register's start bit.

Initiating a new conversion, stops any conversion currently in progress and begins a new conversion. To avoid disrupting a conversion already in progress, the START bit can be read to determine ADC operation status (busy or available).

ADC Timing

Each ADC measurement consists of three phases:

1. Input sampling (programmable, minimum of 1.0µs)
2. Sample-and-hold amplifier settling (programmable, minimum of 0.5µs)
3. Conversion is 13 ADCLK cycles

Figures 12 and 13 display the timing of an ADC conversion.

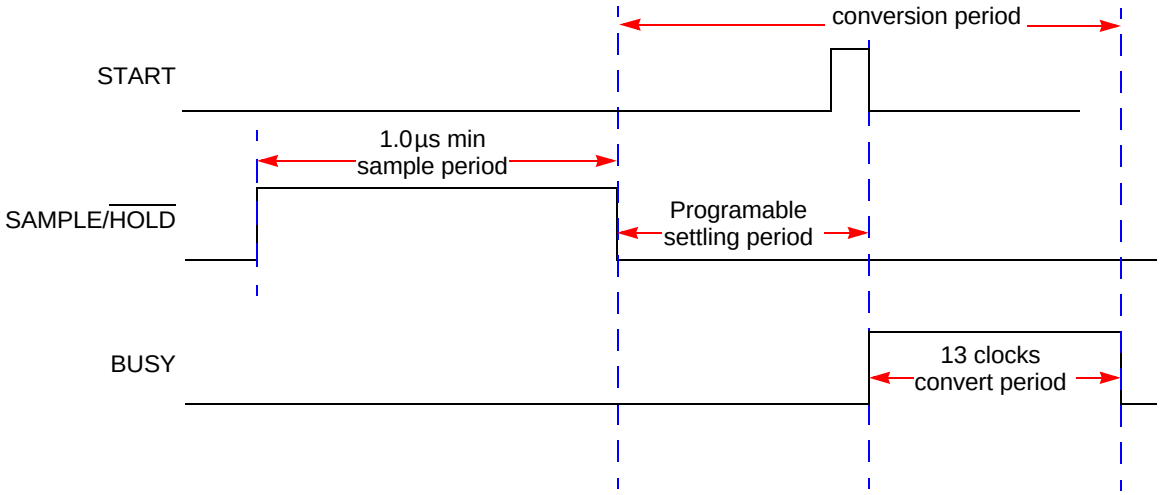

Figure 12. ADC Timing Diagram

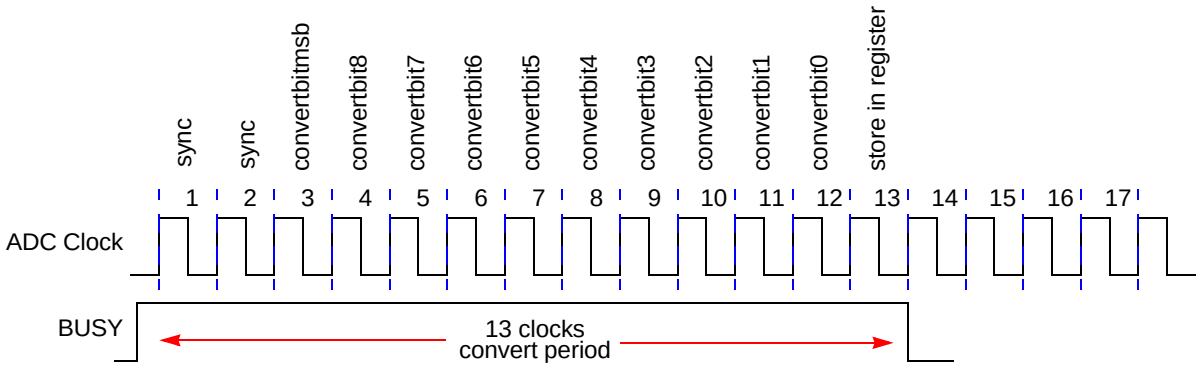

Figure 13. ADC Convert Timing

ADC Interrupt

The ADC can generate an interrupt request when a conversion has been completed. An interrupt request that is pending when the ADC is disabled is not cleared automatically.

Reference Buffer

The reference buffer, RBUF, supplies the reference voltage for the ADC. When enabled, the internal voltage reference generator supplies the ADC. When RBUF is disabled, the ADC must have the reference voltage supplied externally through the V_{REF} pin in 28-pin package. RBUF is controlled by the REFEN bit in the ADC Control Register.

Internal Voltage Reference Generator

The internal voltage reference generator provides the voltage VR2, for the RBUF. VR2 is 2 V.

Calibration and Compensation

A user can perform calibration and store the values into Flash or the user code can perform a manual offset calibration. There is no provision for manual gain calibration.

ADC Control Register Definitions

The ADC Control registers are defined in this section.

ADC Control Register 0

The ADC Control 0 Register, shown in Table 63, initiates an A/D conversion and provides ADC status information.

Table 63. ADC Control Register 0 (ADCCTL0)

Bit	7	6	5	4	3	2	1	0
Field	START	Reserved	REFEN	ADCEN	Reserved	ANAIN[2:0]		
RESET	0	0	0	0	0	0	0	0
R/W	R/W1	R/W	R/W	R/W	R/W	R/W	R/W	R/W
Address	F70h							

Bit	Description
[7] START	**ADC Start/Busy** 0 = Writing to 0 has no effect; reading a 0 indicates that the ADC is available to begin a conversion. 1 = Writing to 1 starts a conversion; reading a 1 indicates that a conversion is currently in progress.
[6]	**Reserved** This bit is reserved and must be programmed to 0.
[5] REFEN	**Reference Enable** 0 = Internal reference voltage is disabled allowing an external reference voltage to be used by the ADC. 1 = Internal reference voltage for the ADC is enabled. The internal reference voltage can be measured on the V_{REF} pin.
[4] ADCEN	**ADC Enable** 0 = ADC is disabled for low power operation. 1 = ADC is enabled for normal use.
[3]	**Reserved** This bit is reserved and must be programmed to 0.
[2:0] ANAIN	**Analog Input Select** 000 = ANA0 input is selected for analog to digital conversion. 001 = ANA1 input is selected for analog to digital conversion. 010 = ANA2 input is selected for analog to digital conversion. 011 = ANA3 input is selected for analog to digital conversion. 100 = ANA4 input is selected for analog to digital conversion. 101 = ANA5 input is selected for analog to digital conversion. 110 = ANA6 input is selected for analog to digital conversion. 111 = ANA7 input is selected for analog to digital conversion.

ADC Data High Byte Register

The ADC Data High Byte Register, listed in Table 64, contains the upper eight bits of the ADC output. Access to the ADC Data High Byte Register is read-only. Reading the ADC Data High Byte Register latches data in the ADC Low Bits Register.

Table 64. ADC Data High Byte Register (ADCD_H)

Bit	7	6	5	4	3	2	1	0
Field	ADCDh							
RESET	X							
R/W	R							
Address	F72h							

Bit	Description
[7:0] ADCDh	**ADC High Byte** 00h–FFh = The last conversion output is held in the data registers until the next ADC conversion is completed.

ADC Data Low Bits Register

The ADC Data Low Bits Register, shown in Table 65, contains the lower bits of the ADC output. Access to the ADC Data Low Bits Register is read-only. Reading the ADC Data High Byte Register latches lower bits of the ADC in the ADC Data Low Bits Register.

Table 65. ADC Data Low Bits Register (ADCD_L)

Bit	7	6	5	4	3	2	1	0
Field	ADCDL		Reserved					
RESET	X		X					
R/W	R		R					
Address	F73h							

Bit	Description
[7:6] ADCDL	**ADC Low Bits** 00–11b = These bits are the two least-significant bits of the 10-bit ADC output. These bits are undefined after a reset. The low bits are latched into this register whenever the ADC Data High Byte Register is read.
[5:0]	**Reserved** These bits are reserved and must be programmed to 000000.

Sample Settling Time Register

The Sample Settling Time Register, shown in Table 66, is used to program a delay after the SAMPLE/HOLD signal is asserted and before the START signal is asserted; an ADC conversion then begins. The number of clock cycles required for settling will vary from system to system depending on the system clock period used. The system designer should program this register to contain the number of clocks required to meet a 0.5µs minimum settling time.

Table 66. Sample Settling Time (ADCSST)

Bit	7	6	5	4	3	2	1	0
Field	Reserved				SST			
RESET	0				1	1	1	1
R/W	R				R/W			
Address	F74h							

Bit	Description
[7:4]	**Reserved** These bits are reserved and must be programmed to 0000.
[3:0] SST	0h–Fh = Sample settling time in number of system clock periods to meet 0.5 µs minimum.

Sample Time Register

The Sample Time Register, shown in Table 67, is used to program the length of active time for a sample after a conversion has begun by setting the START bit in the ADC Control Register. The number of system clock cycles required for the sample time varies from system to system, depending on the clock period used. The system designer should program this register to contain the number of system clocks required to meet a 1 µs minimum sample time.

Table 67. Sample Time (ADCST)

Bit	7	6	5	4	3	2	1	0
Field	Reserved		ST					
RESET	0		1	1	1	1	1	1
R/W	R/W		R/W					
Address	F75h							

Bit	Description
[7:6]	**Reserved** These bits are reserved and must be programmed to 00.
[5:0] ST	0h–Fh = Sample-hold time in number of system clock periods to meet 1 µs minimum.

Comparator

The Z8 Encore! F0830 Series devices feature a general purpose comparator that compares two analog input signals. A GPIO (`CINP`) pin provides the positive comparator input. The negative input (`CINN`) can be taken from either an external GPIO pin or from an internal reference. The output is available as an interrupt source or can be routed to an external pin using the GPIO multiplex. The comparator includes the following features:

- Positive input is connected to a GPIO pin
- Negative input can be connected to either a GPIO pin or a programmable internal reference
- Output can be either an interrupt source or an output to an external pin

Operation

One of the comparator inputs can be connected to an internal reference that is a user-selectable reference and is user-programmable with 200 mV resolution.

The comparator can be powered down to save supply current. For details, see the Power Control Register 0 section on page 31.

Caution: As a result of the propagation delay of the comparator, Zilog does not recommend enabling the comparator without first disabling interrupts and waiting for the comparator output to settle. This delay prevents spurious interrupts after comparator enabling.

The following example shows how to safely enable the comparator:

```
di
ld cmp0,r0; load some new configuration
nop
nop      ; wait for output to settle
clr irq0 ; clear any spurious interrupts pending
ei
```

Comparator Control Register Definitions

The Comparator Control Register (CMP0) configures the comparator inputs and sets the value of the internal voltage reference. The GPIO pin is always used as positive comparator input.

Table 68. Comparator Control Register (CMP0)

Bit	7	6	5	4	3	2	1	0
Field	Reserved	INNSEL	REFLVL				Reserved	
RESET	0	0	0	1	0	1	0	0
R/W	R/W	R/W	R/W	R/W	R/W	R/W	R/W	R/W
Address	F90h							

Bit	Description
[7]	**Reserved** This bit is reserved and must be programmed to 0.
[6] INNSEL	**Signal Select for Negative Input** 0 = internal reference disabled, GPIO pin used as negative comparator input. 1 = internal reference enabled as negative comparator input.
[5:2] REFLVL	**Internal Reference Voltage Level** This reference is independent of the ADC voltage reference. 0000 = 0.0V. 0001 = 0.2V. 0010 = 0.4V. 0011 = 0.6V. 0100 = 0.8V. 0101 = 1.0V (Default). 0110 = 1.2V. 0111 = 1.4V. 1000 = 1.6V. 1001 = 1.8V. 1010–1111 = Reserved.
[1:0]	**Reserved** These bits are reserved and must be programmed to 00.

Flash Memory

The products in the Z8 Encore! F0830 Series features either 1KB (1024 bytes with NVDS), 2KB (2048 bytes with NVDS), 4KB (4096 bytes with NVDS), 8KB (8192 bytes with NVDS) or 12KB (12288 bytes with no NVDS) of nonvolatile Flash memory with read/write/erase capability. Flash memory can be programmed and erased in-circuit by either user code or through the On-Chip Debugger.

The Flash memory array is arranged in pages with 512 bytes per page. The 512-byte page is the minimum Flash block size that can be erased. Each page is divided into eight rows of 64 bytes.

For program/data protection, Flash memory is also divided into sectors. In the Z8 Encore! F0830 Series, each sector maps to one page (for 1KB, 2KB and 4KB devices), two pages (8KB device) or three pages (12KB device).

The first two bytes of Flash program memory is used as Flash option bits. For more information, see the Flash Option Bits chapter on page 124.

Table 69 lists the Flash memory configuration for each device in the Z8 Encore! F0830 Series. Figures 14 through 18 display the memory arrangements for each Flash memory size.

Table 69. Z8 Encore! F0830 Series Flash Memory Configuration

Part Number	Flash Size KB (Bytes)	Flash Pages	Program Memory Addresses	Flash Sector Size (bytes)
Z8F123x	12 (12,288)	24	0000h–2FFFh	1536
Z8F083x	8 (8196)	16	0000h–1FFFh	1024
Z8F043x	4 (4096)	8	0000h–0FFFh	512
Z8F023x	2 (2048)	4	0000h–07FFh	512
Z8F013x	1 (1024)	2	0000h–03FFh	512

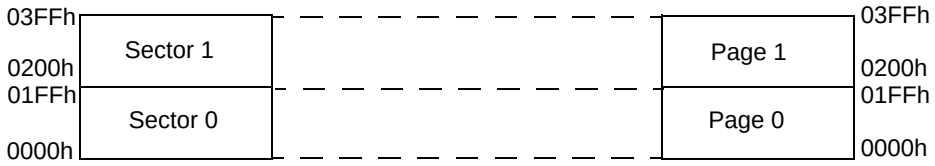

Figure 14. 1K Flash with NVDS

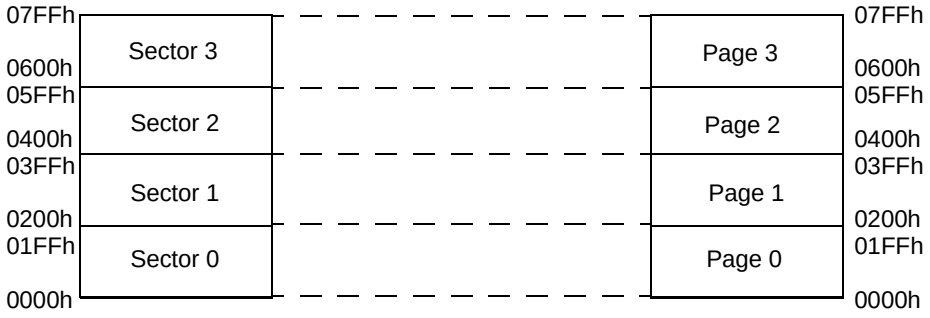

Figure 15. 2K Flash with NVDS

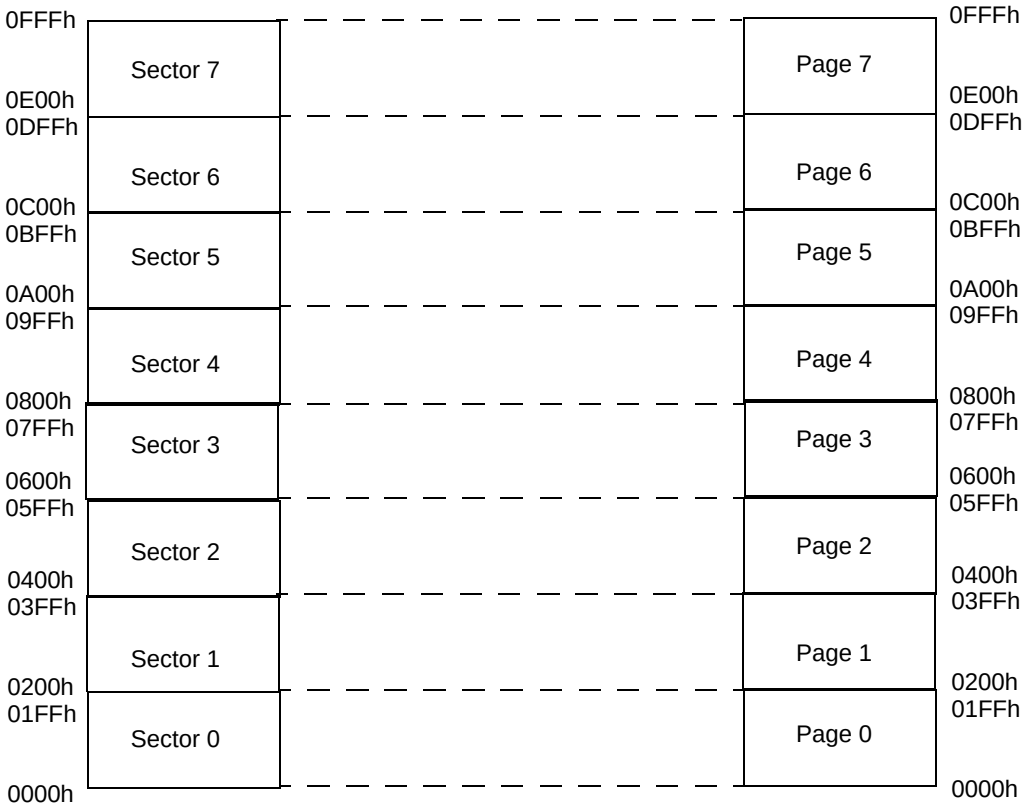

Figure 16. 4K Flash with NVDS

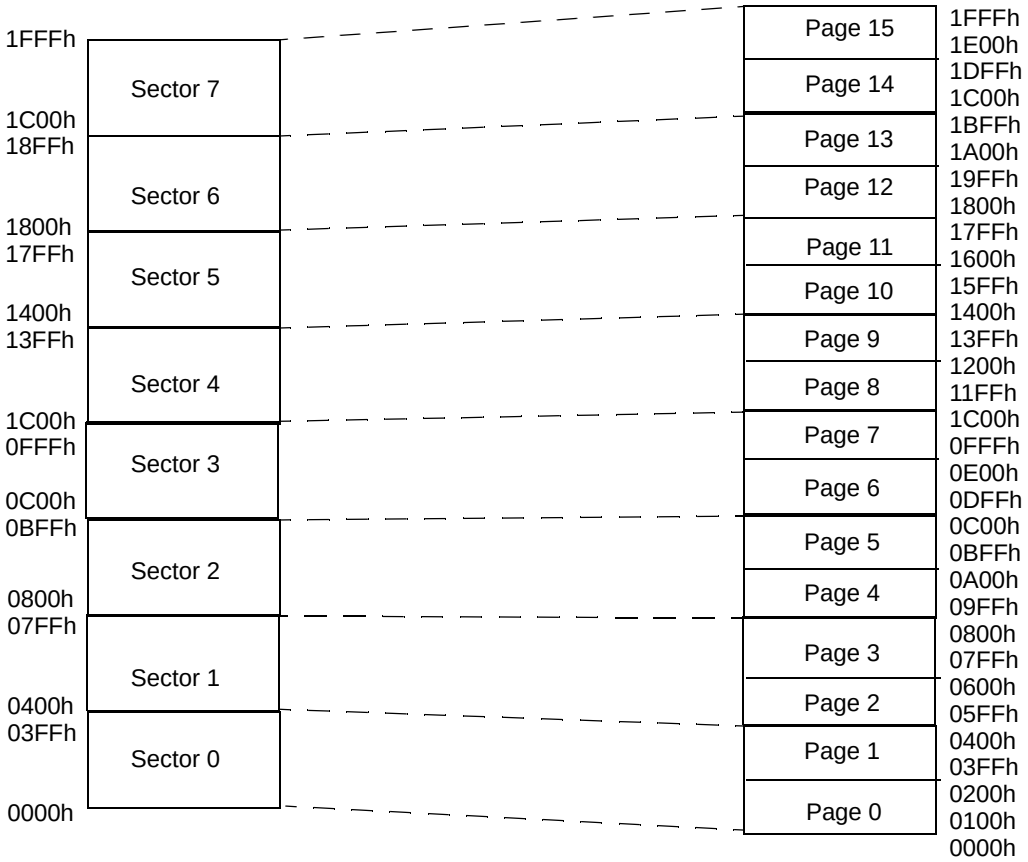

Figure 17. 8K Flash with NVDS

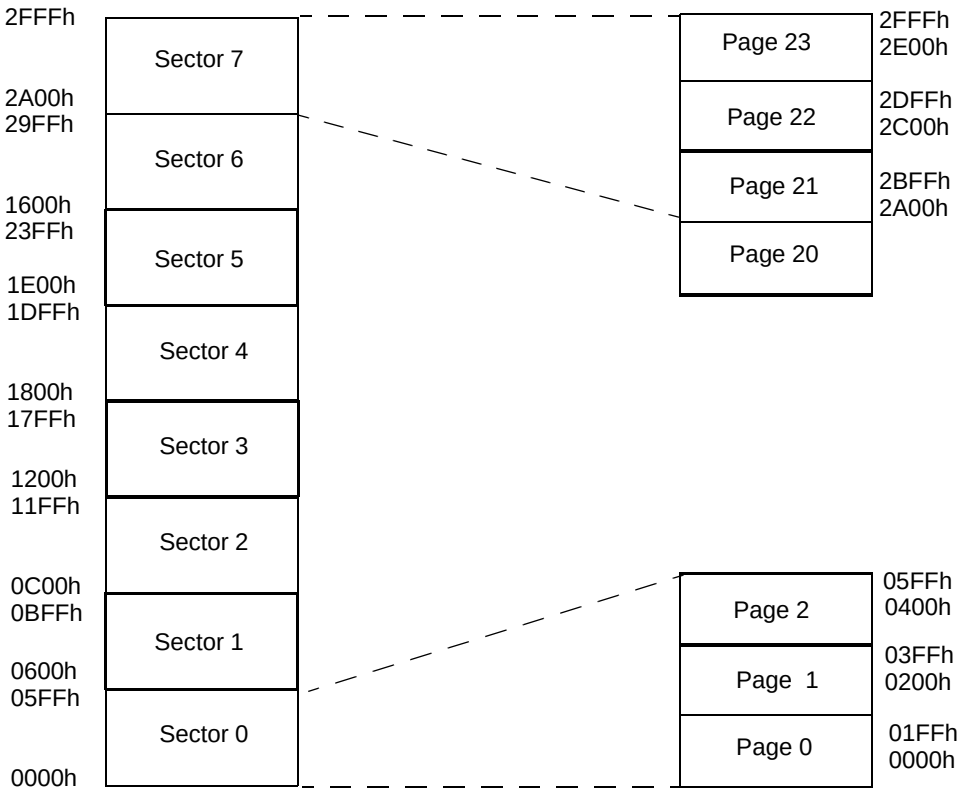

Figure 18. 12K Flash without NVDS

Data Memory Address Space

The Flash information area, including Zilog Flash option bits, are located in the data memory address space. The Z8 Encore! MCU is configured by these proprietary Flash option bits to prevent the user from writing to the eZ8 CPU data memory address space.

Flash Information Area

The Flash information area is physically separate from program memory and is mapped to the address range `FE00h` to `FE7Fh`. Not all of these addresses are user-accessible. Factory trim values for the VBO, Internal Precision Oscillator and factory calibration data for the ADC are stored here.

Table 70 describes the Flash information area. This 128-byte information area is accessed by setting the bit 7 of the Flash Page Select Register to 1. When access is enabled, the

Flash information area is mapped into program memory and overlays the 128 bytes in the address range `FE00h` to `FE7Fh`. When the information area access is enabled, all reads from these program memory addresses return the information area data rather than the program memory data. Access to the Flash information area is read-only.

The trim bits are handled differently than the other Zilog Flash option bits. The trim bits are the hybrid of the user option bits and the standard Zilog option bits. These trim bits must be user-accessible for reading at all times using external registers regardless of the state of bit 7 in the Flash Page Select Register. Writes to the trim space change the value of the Option Bit Holding Register but do not affect the Flash bits, which remain as read-only.

Table 70. Z8F083 Flash Memory Area Map

Program Memory Address (Hex)	Function
FE00–FE3F	Zilog option bits
FE40–FE53	Part number 20-character ASCII alphanumeric code Left justified and filled with Fh
FE54–FE5F	Reserved
FE60–FE7F	Reserved

Operation

The Flash Controller programs and erases Flash memory. The Flash Controller provides the proper Flash controls and timing for byte programming, page erase and mass erase of Flash memory.

The Flash Controller contains several protection mechanisms to prevent accidental programming or erasure. These mechanism operate on the page, sector and full-memory levels.

The flowchart in Figure 19 display basic Flash Controller operation. The following subsections provide details about the various operations (Lock, Unlock, Byte Programming, Page Protect, Page Unprotect, Page Select Page Erase and Mass Erase) displayed in Figure 19.

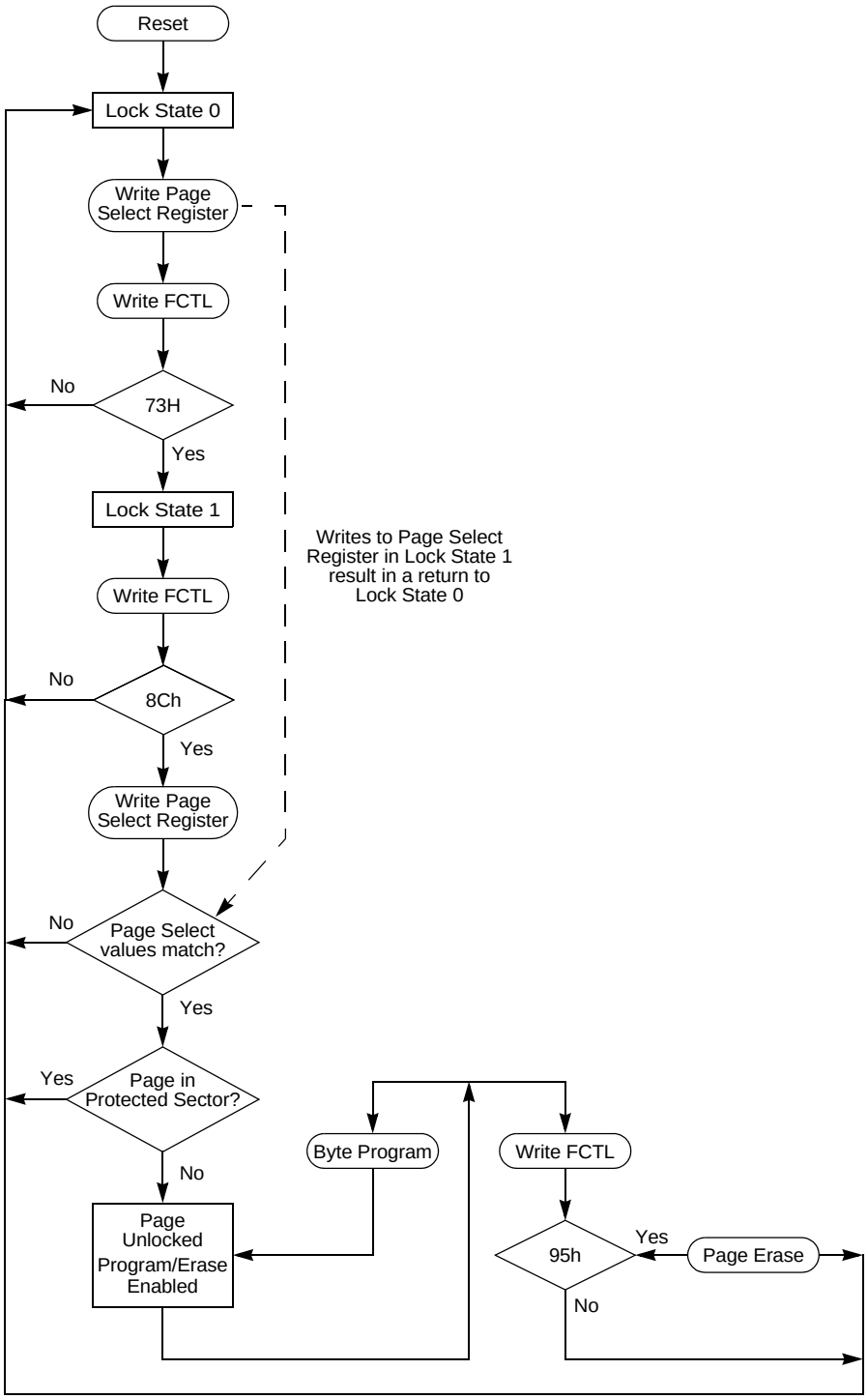

Figure 19. Flash Controller Operation Flow Chart

Flash Operation Timing Using the Flash Frequency Registers

Before performing either a Program or Erase operation on Flash memory, the user must first configure the Flash Frequency High and Low Byte registers. The Flash frequency registers allow programming and erasing of the Flash with system clock frequencies ranging from 10 kHz to 20 MHz.

The Flash Frequency High and Low Byte registers combine to form a 16-bit value, FFREQ, to control the timing for Flash Program and Erase operations. The 16-bit binary Flash frequency value must contain the system clock frequency (in kHz). This value is calculated using the following equation:

$$\text{FFREQ[15:0]} = \frac{\text{System Clock Frequency (Hz)}}{1000}$$

Caution: Flash programming and erasure are not supported for system clock frequencies below 10 kHz or above 20 MHz. The Flash Frequency High and Low Byte registers must be loaded with the correct value to ensure operation of the Z8 Encore! F0830 Series devices.

Flash Code Protection Against External Access

The user code contained within Flash memory can be protected against external access by using the On-Chip Debugger. Programming the FRP Flash option bit prevents reading of the user code using the On-Chip Debugger. For more information, see the Flash Option Bits chapter on page 124 and the On-Chip Debugger chapter on page 139.

Flash Code Protection Against Accidental Program and Erasure

The Z8 Encore! F0830 Series provides several levels of protection against accidental program and erasure of the Flash memory contents. This protection is provided by a combination of the Flash option bits, the register locking mechanism, the page select redundancy and the sector level protection control of the Flash Controller.

Flash Code Protection Using the Flash Option Bits

The FHSWP and FWP Flash option bits combine to provide three levels of Flash program memory protection, as listed in Table 71. See the Flash Option Bits chapter on page 124 for more information.

Table 71. Flash Code Protection using the Flash Option Bits

FHSWP	FWP	Flash Code Protection Description
0	0	Programming and erasing disabled for all Flash program memory. In user code programming, page erase and mass erase are all disabled. Mass erase is available through the On-Chip Debugger.
0 or 1	1	Programming, page erase and mass erase are enabled for all of the Flash program memory.

At reset, the Flash Controller is locked to prevent accidental program or erasure of Flash memory. To program or erase Flash memory, first write the target page to the page select register. Unlock the Flash Controller by making two consecutive writes to the Flash Control Register with the values `73h` and `8Ch`, sequentially. The page select register must be rewritten with the same page previously stored there. If the two page select writes do not match, the controller reverts to a Locked state. If the two writes match, the selected page becomes active. See Figure 19 for details.

After unlocking a specific page, you can enable either page program or erase. Writing the value `95h` causes a page erase only if the active page resides in a sector that is not protected. Any other value written to the Flash Control Register locks the Flash Controller. Mass erase is not allowed in the user code, but is allowed through the debug port.

After unlocking a specific page, the user can also write to any byte on that page. After a byte is written, the page remains unlocked, allowing for subsequent writes to other bytes on the same page. Further writes to the Flash Control Register causes the active page to revert to a Locked state.

Sector Based Flash Protection

The final protection mechanism is implemented on a per-sector basis. The Flash memories of Z8 Encore! devices are divided into maximum number of eight sectors. A sector is one-eighth of the total size of Flash memory, unless this value is smaller than the page size, in which case the sector and page sizes are equal. On Z8 Encore! F0830 Series devices, the sector size is varied according to the Z8 Encore! F0830 Series Flash Memory Configuration shown in Table 69 on page 108 and in Figures 14 through 18, which follow the table

The Flash Sector Protect Register can be configured to prevent sectors from being programmed or erased. After a sector is protected, it cannot be unprotected by user code. The Flash Sector Protect Register is cleared after reset and any previously written protection values is lost. User code must write this register in their initialization routine if they want to enable sector protection.

The Flash Sector Protect Register shares its Register File address with the Page Select Register. The Flash Sector Protect Register is accessed by writing the Flash Control Register with `5Eh`. After the Flash Sector Protect Register is selected, it can be accessed at the Page Select Register address. When user code writes the Flash Sector Protect Register,

bits can only be set to 1. Thus, sectors can be protected, but not unprotected, via register write operations. Writing a value other than `5Eh` to the Flash Control Register deselects the Flash Sector Protect Register and reenables access to the Page Select Register. Observe the following procedure to setup the Flash Sector Protect Register from user code:

1. Write `00h` to the Flash Control Register to reset the Flash Controller.
2. Write `5Eh` to the Flash Control Register to select the Flash Sector Protect Register.
3. Read and/or write the Flash Sector Protect Register which is now at Register File address `FF9h`.
4. Write `00h` to the Flash Control Register to return the Flash Controller to its reset state.

The Sector Protect Register is initialized to 0 on reset, putting each sector into an unprotected state. When a bit in the Sector Protect Register is written to 1, the corresponding sector can no longer be written or erased. After setting a bit in the Sector Protect Register, the bit cannot be cleared by the user.

Byte Programming

Flash memory is enabled for byte programming after unlocking the Flash Controller and successfully enabling either mass erase or page erase. When the Flash Controller is unlocked and mass erase is successfully enabled, all of the program memory locations are available for byte programming. In contrast, when the Flash Controller is unlocked and page erase is successfully enabled, only the locations of the selected page are available for byte programming. An erased Flash byte contains all 1's (`FFh`). The programming operation can only be used to change bits from 1 to 0. To change a Flash bit (or multiple bits) from 0 to 1 requires execution of either the page erase or mass erase commands.

Byte programming can be accomplished using the On-Chip Debugger's write memory command or eZ8 CPU execution of the LDC or LDCI instructions. Refer to the eZ8 CPU Core User Manual (UM0128), which is available for download on www.zilog.com, for the description of the `LDC` and `LDCI` instructions. While the Flash Controller programs the Flash memory, the eZ8 CPU idles, but the system clock and on-chip peripherals continue to operate. To exit programming mode and lock the Flash, write any value to the Flash Control Register, except the mass erase or page erase commands.

Caution: The byte at each address within Flash memory cannot be programmed (any bits written to 0) more than twice before an erase cycle occurs.

Page Erase

Flash memory can be erased one page (512 bytes) at a time. Page erasing Flash memory sets all bytes in that page to the value FFh. The Flash Page Select Register identifies the page to be erased. Only a page residing in an unprotected sector can be erased. With the Flash Controller unlocked and the active page set, writing the value 95h to the Flash Control Register initiates the Page Erase operation. While the Flash Controller executes the Page Erase operation, the eZ8 CPU idles, but the system clock and on-chip peripherals continue to operate. The eZ8 CPU resumes operation after the page erase operation completes. If the Page Erase operation is performed using the On-Chip Debugger, poll the Flash Status Register to determine when the Page Erase operation is complete. When the page erase is complete, the Flash Controller returns to its Locked state.

Mass Erase

Flash memory can also be mass erased using the Flash Controller, but only by using the On-Chip Debugger. Mass erasing Flash memory sets all bytes to the value FFh. With the Flash Controller unlocked and the mass erase successfully enabled, writing the value 63h to the Flash Control Register initiates the Mass Erase operation. While the Flash Controller executes the Mass Erase operation, the eZ8 CPU idles, but the system clock and on-chip peripherals continue to operate. Using the On-Chip Debugger, poll the Flash Status Register to determine when the Mass Erase operation is complete. When the mass erase is complete, the Flash Controller returns to its Locked state.

Flash Controller Bypass

The Flash Controller can be bypassed; instead, the control signals for Flash memory can be brought out to the GPIO pins. Bypassing the Flash Controller allows faster row programming algorithms by controlling the Flash programming signals directly.

Row programing is recommended for gang programming applications and large volume customers who do not require in-circuit initial programming of Flash memory. Mass Erase and Page Erase operations are also supported, when the Flash Controller is bypassed.

For more information about bypassing the Flash Controller, refer to *Third-Party Flash Programming Support for Z8 Encore!*. This document is available for download at www.zilog.com.

Flash Controller Behavior in Debug Mode

The following behavioral changes can be observed in the Flash Controller when the Flash Controller is accessed using the On-Chip Debugger:

- The Flash write protect option bit is ignored.

- The Flash Sector Protect Register is ignored for programming and Erase operations.
- Programming operations are not limited to the page selected in the page select register.
- Bits in the Flash Sector Protect Register can be written to one or zero.
- The second write of the page select register to unlock the Flash Controller is not necessary.
- The page select register can be written when the Flash Controller is unlocked.
- The mass erase command is enabled through the Flash Control Register

Caution: For security reasons, Flash Controller allows only a single page to be opened for write/erase. When writing multiple Flash pages, the Flash Controller must go through the unlock sequence again to select another page.

NVDS Operational Requirements

The device uses a 12KB Flash memory space, despite the maximum specified Flash size of 8KB (with the exception of 12KB mode with non-NVDS). User code accesses the lower 8KB of Flash, leaving the upper 4KB for proprietary (for Zilog-only) memory. The NVDS is implemented by using this proprietary memory space for special-purpose routines and for the data required by these routines, which are factory-programmed and cannot be altered by the user. The NVDS operation is described in detail in the Nonvolatile Data Storage chapter on page 134.

The NVDS routines are triggered by a user code: CALL into proprietary memory. Code executing from this proprietary memory must be able to read and write other locations within proprietary memory. User code must not be able to read or write proprietary memory.

Flash Control Register Definitions

This section defines the features of the following Flash Control registers.

Flash Control Register: see page 119

Flash Status Register: see page 120

Flash Page Select Register: see page 121

Flash Sector Protect Register: see page 122

Flash Frequency High and Low Byte Registers: see page 123

Flash Control Register

The Flash Controller must be unlocked using the Flash Control Register before programming or erasing Flash memory. Writing the sequence `73h 8Ch`, sequentially, to the Flash Control Register unlocks the Flash Controller. When the Flash Controller is unlocked, Flash memory can be enabled for mass erase or page erase by writing the appropriate enable command to the FCTL. Page erase applies only to the active page selected in Flash Page Select Register. Mass erase is enabled only through the On-Chip Debugger. Writing an invalid value or an invalid sequence returns the Flash Controller to its Locked state. The write-only Flash Control Register shares its register file address with the read-only Flash Status Register.

Table 72. Flash Control Register (FCTL)

Bit	7	6	5	4	3	2	1	0
Field	FCMD							
RESET	0	0	0	0	0	0	0	0
R/W	W	W	W	W	W	W	W	W
Address	FF8h							

Bit	Description
[7:0] FCMD	**Flash Command** 73h = First unlock command. 8Ch = Second unlock command. 95h = Page erase command (must be third command in sequence to initiate page erase). 63h = Mass erase command (must be third command in sequence to initiate mass erase). 5Eh = Enable Flash Sector Protect Register access.

Flash Status Register

The Flash Status Register indicates the current state of the Flash Controller. This register can be read at any time. The read-only Flash Status Register shares its register file address with the write-only Flash Control Register.

Table 73. Flash Status Register (FSTAT)

Bit	7	6	5	4	3	2	1	0
Field	Reserved		FSTAT					
RESET	0	0	0	0	0	0	0	0
R/W	R	R	R	R	R	R	R	R
Address	FF8h							

Bit	Description
[7:6]	**Reserved** These bits are reserved and must be programmed to 00.
[5:0] FSTAT	**Flash Controller Status** 000000 = Flash Controller locked. 000001 = First unlock command received (73h written). 000010 = Second unlock command received (8Ch written). 000011 = Flash Controller unlocked. 000100 = Sector protect register selected. 001xxx = Program operation in progress. 010xxx = Page Erase operation in progress. 100xxx = Mass Erase operation in progress.

Flash Page Select Register

The Flash Page Select Register shares address space with the Flash Sector Protect Register. Unless the Flash Controller is locked and written with `5Eh`, any writes to this address will target the Flash Page Select Register.

The register selects one of the eight available Flash memory pages to be programmed or erased. Each Flash page contains 512-bytes of Flash memory. During a page erase operation, all Flash memory containing addresses with the most significant 7 bits within FPS[6:0] are chosen for program/erase operations.

Table 74. Flash Page Select Register (FPS)

Bit	7	6	5	4	3	2	1	0
Field	INFO_EN	PAGE						
RESET	0	0	0	0	0	0	0	0
R/W	R/W	R/W	R/W	R/W	R/W	R/W	R/W	R/W
Address	FF9h							

Bit	Description
[7] INFO_EN	**Information Area Enable** 0 = Information area is not selected. 1 = Information area is selected. The information area is mapped into the program memory address space at addresses FE00h through FFFFh.
[6:0] PAGE	**Page Select** This 7-bit field identifies the Flash memory page for page erase and page unlocking. Program memory address[15:9] = PAGE[6:0]. For Z8F04xx and Z8F02xx devices, the upper four bits must always be 0. For Z8F01xx devices, the upper five bits must always be 0.

Flash Sector Protect Register

The Flash Sector Protect Register is shared with the Flash Page Select Register. When the Flash Control Register is locked and written with 5Eh, the next write to this address targets the Flash Sector Protect Register. In all other cases, it targets the Flash Page Select Register.

This register selects one of the eight available Flash memory sectors to be protected. The Reset state of each sector protect bit is the zero (unprotected) state. After a sector is protected by setting its corresponding register bit, the register bit cannot be cleared by the user.

To determine the appropriate Flash memory sector address range and sector number for your F0830 Series product, please refer to Table 70 on page 112.

Table 75. Flash Sector Protect Register (FPROT)

Bit	7	6	5	4	3	2	1	0
Field	SPROT7	SPROT6	SPROT5	SPROT4	SPROT3	SPROT2	SPROT1	SPROT0
RESET	0	0	0	0	0	0	0	0
R/W	R/W	R/W	R/W	R/W	R/W	R/W	R/W	R/W
Address	FF9h							

Bit	Description
[7:0] SPROT*x*	**Sector Protection** For Z8F12xx, Z8F08xx and Z8F04xx devices, all bits are used. For Z8F02xx devices, the upper four bits remain unused. For Z8F01xx devices, the upper six bits remain unused. To determine the appropriate Flash memory sector address range and sector number for your F0830 Series product, please refer to Table 69 and to Figures 14 through 18.

Note: *x* indicates bits in the range 7–0.

Flash Frequency High and Low Byte Registers

The Flash Frequency High and Low Byte registers, shown in Tables 76 and 77, combine to form a 16-bit value, FFREQ, to control timing for Flash program and erase operations. The 16-bit binary Flash frequency value must contain the system clock frequency (in kHz) and is calculated using the following equation:

$$\text{FFREQ[15:0]} = \{\text{FFREQH[7:0],FFREQL[7:0]}\} = \frac{\text{System Clock Frequency}}{1000}$$

Caution: Flash programming and erasure is not supported for system clock frequencies below 10 kHz or above 20 MHz. The Flash Frequency High and Low Byte registers must be loaded with the correct value to ensure proper operation of the device.

Table 76. Flash Frequency High Byte Register (FFREQH)

Bit	7	6	5	4	3	2	1	0
Field	FFREQH							
RESET	0	0	0	0	0	0	0	0
R/W	R/W	R/W	R/W	R/W	R/W	R/W	R/W	R/W
Address	FFAh							

Bit	Description
[7:0] FFREQH	**Flash Frequency High Byte** High byte of the 16-bit Flash frequency value.

Table 77. Flash Frequency Low Byte Register (FFREQL)

Bit	7	6	5	4	3	2	1	0
Field	FFREQL							
RESET	0							
R/W	R/W							
Address	FFBh							

Bit	Description
[7:0] FFREQL	**Flash Frequency High Byte** Low byte of the 16-bit Flash frequency value.

Flash Option Bits

Programmable Flash option bits allow user configuration of certain aspects of Z8 Encore! F0830 Series operation. The feature configuration data is stored in the Flash program memory and read during reset. The features available for control through the Flash option bits are:

- Watchdog Timer time-out response selection–interrupt or system reset
- Watchdog Timer enabled at reset
- The ability to prevent unwanted read access to user code in program memory
- The ability to prevent accidental programming and erasure of all or a portion of the user code in program memory
- Voltage Brown-Out configuration always enabled or disabled during Stop Mode to reduce Stop Mode power consumption
- OSCILLATOR Mode selection for high, medium and low power crystal oscillators or external RC oscillator
- Factory trimming information for the Internal Precision Oscillator and VBO voltage

Operation

This section describes the type and configuration of the programmable Flash option bits.

Option Bit Configuration by Reset

Each time the Flash option bits are programmed or erased, the device must be reset for the change to be effective. During any Reset operation (system reset or Stop Mode Recovery), the Flash option bits are automatically read from Flash program memory and written to the Option Configuration registers, which control Z8 Encore! F0830 Series device operation. Option bit control is established before the device exits reset and the eZ8 CPU begins code execution. The Option Configuration registers are not part of the register file and are not accessible for read or write access.

Option Bit Types

This section describes the two types of Flash option bits offered in the F0830 Series.

User Option Bits

The user option bits are contained in the first two bytes of program memory. User access to these bits is provided because these locations contain application specific device configurations. The information contained here is lost when page 0 of program memory is erased.

Trim Option Bits

The trim option bits are contained in the information page of the Flash memory. These bits are factory programmed values required to optimize the operation of onboard analog circuitry and cannot be permanently altered by the user. Program memory can be erased without endangering these values. It is possible to alter working values of these bits by accessing the trim bit address and data registers, but these working values are lost after a power loss.

There are 32 bytes of trim data. To modify one of these values, the user code must first write a value between `00h` and `1Fh` into the Trim Bit Address Register. The next write to the Trim Bit Data Register changes the working value of the target trim data byte.

Reading the trim data requires the user code to write a value between `00h` and `1Fh` into the Trim Bit Address Register. The next read from the Trim Bit Data Register returns the working value of the target trim data byte.

Note: The trim address range is from information address `20–3F` only. The remaining information page is not accessible via the Trim Bit Address and Data registers.

During reset, the first 43 system clock cycles perform 43 Flash accesses. The six bits of the counter provide the lower six bits of the Flash memory address. All other address bits are set to 0. The option bit registers use the 6-bit address from the counter as an address and latch the data from the Flash on the positive edge of the IPO clock, allowing for a maximum of 344 bits (43 bytes) of option information to be read from Flash.

Because option information is stored in both the first two bytes of program memory and in the information area of Flash memory, the data must be placed in specific locations to be read correctly. In this case, the first two bytes at addresses 0 and 1 in program memory are read out and the remainder of the bytes are read out of the Flash information area.

Flash Option Bit Control Register Definitions

This section briefly describes the features of the Trim Bit Address and Data registers.

Trim Bit Address Register

The Trim Bit Address Register, shown in Table 78, contains the target address to access the trim option bits. Trim bit addresses in the range `00h–1Fh` map to the information area at addresses `20h–3Fh`, as shown in Table 79.

Table 78. Trim Bit Address Register (TRMADR)

Bit	7	6	5	4	3	2	1	0
Field	TRMADR: Trim Bit Address (00h to 1Fh)							
RESET	0	0	0	0	0	0	0	0
R/W	R/W	R/W	R/W	R/W	R/W	R/W	R/W	R/W
Address	FF6h							

Table 79. Trim Bit Address Map

Trim Bit Address	Information Area Address
00h	20h
01h	21h
02h	22h
03h	23h
:	:
1Fh	3Fh

Trim Bit Data Register

The Trim Bit Data Register, shown in Table 80, contains the read or write data to access the trim option bits.

Table 80. Trim Bit Data Register (TRMDR)

Bit	7	6	5	4	3	2	1	0
Field	TRMDR: Trim Bit Data							
RESET	0	0	0	0	0	0	0	0
R/W	R/W	R/W	R/W	R/W	R/W	R/W	R/W	R/W
Address	FF7h							

Flash Option Bit Address Space

The first two bytes of Flash program memory at addresses `0000h` and `0001h` are reserved for the user-programmable Flash option bits. See Tables 81 and 82.

Table 81. Flash Option Bits at Program Memory Address 0000h

Bit	7	6	5	4	3	2	1	0
Field	WDT_RES	WDT_AO	OSC_SEL[1:0]		VBO_AO	FRP	Reserved	FWP
RESET	U	U	U	U	U	U	U	U
R/W	R/W	R/W	R/W	R/W	R/W	R/W	R/W	R/W
Address	Program Memory 0000h							
Note: U = Unchanged by Reset. R/W = Read/Write.								

Bit	Description
[7] WDT_RES	**Watchdog Timer Reset** 0 = Watchdog Timer time-out generates an interrupt request. Interrupts must be globally enabled for the eZ8 CPU to acknowledge the interrupt request. 1 = Watchdog Timer time-out causes a system reset. This is the default setting for unprogrammed (erased) Flash.
[6] WDT_AO	**Watchdog Timer Always On** 0 = On application of system power, Watchdog Timer is automatically enabled. Watchdog Timer cannot be disabled. 1 = Watchdog Timer is enabled on execution of the WDT instruction. Once enabled, the Watchdog Timer can only be disabled by a reset. This is the default setting for unprogrammed (erased) Flash.
[5:4] OSC_SEL	**OSCILLATOR Mode Selection** 00 = On-chip oscillator configured for use with external RC networks (<4MHz). 01 = Minimum power for use with very low frequency crystals (32 kHz to 1.0MHz). 10 = Medium power for use with medium frequency crystals or ceramic resonators (0.5MHz to 5.0MHz). 11 = Maximum power for use with high frequency crystals (5.0MHz to 20.0MHz). This is the default setting for unprogrammed (erased) Flash.

Bit	Description (Continued)
[3] VBO_AO	**Voltage Brown-Out Protection Always On** 0 = Voltage Brown-Out protection is disabled in Stop Mode to reduce total power consumption. 1 = Voltage Brown-Out protection is always enabled, even during Stop Mode. This setting is the default setting for unprogrammed (erased) Flash.
[2] FRP	**Flash Read Protect** 0 = User program code is inaccessible. Limited control features are available through the On-Chip Debugger. 1 = User program code is accessible. All On-Chip Debugger commands are enabled. This is the default setting for unprogrammed (erased) Flash.
[1]	**Reserved** This bit is reserved and must be programmed to 1.
[0] FWP	**Flash Write Protect** This option bit provides Flash program memory protection. 0 = Programming and erasure disabled for all Flash program memory. Programming, page erase and mass erase through user code is disabled. Mass erase is available using the On-Chip Debugger. 1 = Programming, page erase and mass erase are enabled for all Flash program memory.

Table 82. Flash Options Bits at Program Memory Address 0001h

Bit	7	6	5	4	3	2	1	0
Field	VBO_RES	Reserved		XTLDIS	Reserved			
RESET	U	U	U	U	U	U	U	U
R/W	R/W	R/W	R/W	R/W	R/W	R/W	R/W	R/W
Address	Program Memory 0001h							
Note: U = Unchanged by Reset. R/W = Read/Write.								

Bit	Description
[7] VBO_RES	**Voltage Brown-Out reset** 1 = VBO detection causes a system reset. This setting is the default setting for unprogrammed (erased) Flash.
[6:5]	**Reserved** These bits are reserved and must be programmed to 11.

Bit	Description (Continued)
[4] XTLDIS	**State of the Crystal Oscillator at Reset** This bit enables only the crystal oscillator. Selecting the crystal oscillator as the system clock must be performed manually. 0 = The crystal oscillator is enabled during reset, resulting in longer reset timing. 1 = The crystal oscillator is disabled during reset, resulting in shorter reset timing.
[3:0]	**Reserved** These bits are reserved and must be programmed to 1111.

Trim Bit Address Space

All available trim bit addresses and their functions are listed in Tables 83 through 90.

Table 83. Trim Bit Address Space

Address	Function
00h	ADC reference voltage
01h	ADC and comparator
02h	Internal Precision Oscillator
03h	Oscillator and VBO
06h	ClkFltr

Table 84. Trim Option Bits at 0000h (ADCREF)

Bit	7	6	5	4	3	2	1	0
Field	ADCREF_TRIM					Reserved		
RESET	U					U		
R/W	R/W					R/W		
Address	Information Page Memory 0020h							
Note: U = Unchanged by Reset. R/W = Read/Write.								

Bit	Description
[7:3] ADCREF_TRIM	**ADC Reference Voltage Trim Byte** Contains trimming bits for ADC reference voltage.
[2:0]	**Reserved** These bits are reserved and must be programmed to 111.

Note: The bit values used in Table 84 are set at the factory; no calibration is required.

Table 85. Trim Option Bits at 0001h (TADC_COMP)

Bit	7	6	5	4	3	2	1	0
Field	Reserved							
RESET	U	U	U	U	U	U	U	U
R/W	R/W	R/W	R/W	R/W	R/W	R/W	R/W	R/W
Address	Information Page Memory 0021h							
Note: U = Unchanged by Reset. R/W = Read/Write.								

Bit	Description
[7:0]	**Reserved** Altering this register may result in incorrect device operation.

Note: The bit values used in Table 85 are set at the factory; no calibration is required.

Table 86. Trim Option Bits at 0002h (TIPO)

Bit	7	6	5	4	3	2	1	0
Field	IPO_TRIM							
RESET	U							
R/W	R/W							
Address	Information Page Memory 0022h							
Note: U = Unchanged by Reset. R/W = Read/Write.								

Bit	Description
[7:0] IPO_TRIM	**Internal Precision Oscillator Trim Byte** Contains trimming bits for the Internal Precision Oscillator.

Note: The bit values used in Table 86 are set at the factory; no calibration is required.

Table 87. Trim Option Bits at 0003h (TVBO)

Bit	7	6	5	4	3	2	1	0
Field	Reserved				Reserved	VBO_TRIM		
RESET	U				U	1	0	0
R/W	R/W				R/W	R/W		
Address	Information Page Memory 0023h							
Note: U = Unchanged by Reset. R/W = Read/Write.								

Bit	Description
[7:3]	**Reserved** These bits are reserved and must be programmed to 11111.
[2] VBO_TRIM	**VBO Trim Values** Contains factory-trimmed values for the oscillator and the VBO.

Note: The bit values used in Table 87 are set at the factory; no calibration is required.

Table 88. VBO Trim Definition

VBO_TRIM	Trigger Voltage Level
000	1.7
001	1.6
101	2.2
110	2.0
100	2.4
111	1.8

On-chip Flash memory is only guaranteed to perform write operations when voltage supplies exceed 2.7V. Write operations at voltages below 2.7V will yield unpredictable results.

Table 89. Trim Option Bits at 0006h (TCLKFLT)

Bit	7	6	5	4	3	2	1	0
Field	DivBy4	Reserved	DlyCtl1	DlyCtl2	DlyCtl3	Reserved	FilterSel1	FilterSel0
RESET	0	1	0	0	0	1	0	0
R/W	R/W	R/W	R/W	R/W	R/W	R/W	R/W	R/W
Address	Information Page Memory 0026h							

Note: U = Unchanged by Reset. R/W = Read/Write.

Bit	Description
[7] DivBy4	**Output Frequency Selection** 0 = Output frequency is input frequency. 1 = Output frequency is 1/4 of the input frequency.
[6]	**Reserved** This bit is reserved and must be programmed to 1.
[5:3] DlyCtl*x*	**Delay Control** 3-bit selection for the pulse width that can be filtered. See Table 90 for Delay Control values at 3.3V operation voltage.
[2]	**Reserved** This bit is reserved and must be programmed to 1.

Notes: x indicates bit values 3–1; y indicates bit values 1–0.

Bit	Description (Continued)
[1:0] FilterSel*y*	**Filter Select** 2-bit selection for the clock filter mode. 00 = No filter. 01 = Filter low level noise on high level signal. 10 = Filter high level noise on low level signal. 11 = Filter both.
Notes: x indicates bit values 3–1; y indicates bit values 1–0.	

Note: The bit values used in Table 89 are set at factory and no calibration is required.

Table 90. ClkFlt Delay Control Definition

DlyCtl3, DlyCtl2, DlyCtl1	Low Noise Pulse on High Signal (ns)	High Noise Pulse on Low Signal (ns)
000	5	5
001	7	7
010	9	9
011	11	11
100	13	13
101	17	17
110	20	20
111	25	25
Note: The variation is about 30%.		

Nonvolatile Data Storage

Z8 Encore! F0830 Series devices contain a Nonvolatile Data Storage (NVDS) element of up to 64 bytes (except when in Flash 12KB mode). This type of memory can perform over 100,000 write cycles.

Operation

NVDS is implemented by special-purpose Zilog software stored in areas of program memory that are not user-accessible. These special-purpose routines use Flash memory to store the data, and incorporate a dynamic addressing scheme to maximize the write/erase endurance of the Flash.

Note: The products in the Z8 Encore! F0830 Series feature multiple NVDS array sizes. See the Z8 Encore! F0830 Series Family Part Selection Guide section on page 2 for details.

NVDS Code Interface

Two routines are required to access the NVDS: a write routine and a read routine. Both of these routines are accessed with a `CALL` instruction to a predefined address outside of program memory that is accessible to the user. Both the NVDS address and data are single-byte values. In order to not disturb the user code, these routines save the working register set before using it so that 16 bytes of stack space are required to preserve the site. After finishing the call to these routines, the working register set of the user code is recovered.

During both read and write accesses to the NVDS, interrupt service is not disabled. Any interrupts that occur during NVDS execution must not disturb the working register and existing stack contents; otherwise, the array can become corrupted. Zilog recommends the user disable interrupts before executing NVDS operations.

Use of the NVDS requires 16 bytes of available stack space. The contents of the working register set are saved before calling NVDS read or write routines.

For correct NVDS operation, the Flash Frequency registers must be programmed based on the system clock frequency. See the Flash Operation Timing Using the Flash Frequency Registers section on page 114.

Byte Write

To write a byte to the NVDS array, the user code must first push the address, then the data byte onto the stack. The user code issues a `CALL` instruction to the address of the Byte Write routine (`0x20B3`). At the return from the subroutine, the write status byte resides in working register R0. The bit fields of this status byte are defined in Table 91. Additionally, user code should pop the address and data bytes off the stack.

The write routine uses 16 bytes of stack space in addition to the two bytes of address and data pushed by the user code. Sufficient memory must be available for this stack usage.

Because of the Flash memory architecture, NVDS writes exhibit a nonuniform execution time. In general, a write takes 136µs (assuming a 20MHz system clock). For every 200 writes, however, a maintenance operation is necessary. In this rare occurrence, the write takes up to 58ms to complete. Slower system clock speeds result in proportionally higher execution times.

NVDS byte writes to invalid addresses (those exceeding the NVDS array size) have no effect. Illegal write operations have a 7µs execution time.

Table 91. Write Status Byte

Bit	7	6	5	4	3	2	1	0
Field	Reserved					FE	IGADDR	WE
Default Value	0	0	0	0	0	0	0	0

Bit	Description
[7:3]	**Reserved** These bits are reserved and must be programmed to 00000.
[2] FE	**Flash Error** If a Flash error is detected, this bit is set to 1.
[1] IGADDR	**Illegal Address** When an NVDS byte writes to invalid addresses occur (those exceeding the NVDS array size), this bit is set to 1.
[0] WE	**Write Error** A failure occurs during data writes to Flash. When writing data into a certain address, a read-back operation is performed. If the read-back value is not the same as the value written, this bit is set to 1.

Byte Read

To read a byte from the NVDS array, user code must first push the address onto the stack. User code issues a `CALL` instruction to the address of the byte-read routine (`0x2000`). At the return from the subroutine, the read byte resides in working register R0 and the read status byte resides in working register R1. The bit fields of this status byte are defined in Table 92. Additionally, the user code should pop the address byte off the stack.

The read routine uses 16 bytes of stack space in addition to the one byte of address pushed by the user code. Sufficient memory must be available for this stack usage.

Due to the Flash memory architecture, NVDS reads exhibit a nonuniform execution time. A read operation takes between 71µs and 258µs (assuming a 20MHz system clock). Slower system clock speeds result in proportionally higher execution times.

NVDS byte reads from invalid addresses (those exceeding the NVDS array size) return `0xff`. Illegal read operations have a 6µs execution time.

The status byte returned by the NVDS read routine is zero for a successful read. If the status byte is nonzero, there is a corrupted value in the NVDS array at the location being read. In this case, the value returned in R0 is the byte most recently written to the array that does not have an error.

Table 92. Read Status Byte

Bit	7	6	5	4	3	2	1	0
Field	Reserved			DE	Reserved	FE	IGADDR	Reserved
Default Value	0	0	0	0	0	0	0	0

Bit	Description
[7:5]	**Reserved** These bits are reserved and must be programmed to 000.
[4] DE	**Data Error** When reading an NVDS address, if an error is found in the latest data corresponding to this NVDS address, this bit is set to 1. NVDS source code steps forward until it finds valid data at this address.
[3]	**Reserved** This bit is reserved and must be programmed to 0.
[2] FE	**Flash Error** If a Flash error is detected, this bit is set to 1.
[1] IGADDR	**Illegal Address** When NVDS byte reads from invalid addresses (those exceeding the NVDS array size) occur, this bit is set to 1.
[0]	**Reserved** This bit is reserved and must be programmed to 0.

Power Failure Protection

NVDS routines employ error-checking mechanisms to ensure that any power failure will only endanger the most recently written byte. Bytes previously written to the array are not perturbed. For this protection to function, the VBO must be enabled (see the Low-Power Modes chapter on page 30) and configured for a threshold voltage of 2.4V or greater (see the Trim Bit Address Space section on page 129).

A system reset (such as a pin reset or Watchdog Timer reset) that occurs during a write operation also perturbs the byte currently being written. All other bytes in the array are unperturbed.

Optimizing NVDS Memory Usage for Execution Speed

As indicated in Table 93, the NVDS read time varies drastically; this discrepancy being a trade-off for minimizing the frequency of writes that require post-write page erases. The NVDS read time of address N is a function of the number of writes to addresses other than N since the most recent write to address N as well as the number of writes since the most recent page erase. Neglecting the effects caused by page erases and results caused by the initial condition in which the NVDS is blank, a rule of thumb to consider is that every write since the most recent page erase causes read times of unwritten addresses to increase by 0.8µs up to a maximum of 258µs.

Table 93. NVDS Read Time

Operation	Minimum Latency (µs)	Maximum Latency (µs)
Read	71	258
Write	126	136
Illegal Read	6	6
Illegal Write	7	7

Note: For every 200 writes, a maintenance operation is necessary. In this rare occurrence, the write takes up to 58ms to complete.

If NVDS read performance is critical to your software architecture, you can optimize your code for speed by using either of the two methods listed below.

1. Periodically refresh all addresses that are used; this is the more useful method. The optimal use of NVDS, in terms of speed, is to rotate the writes evenly among all addresses planned for use, thereby bringing all reads closer to the minimum read time.

Because the minimum read time is much less than the write time, however, actual speed benefits are not always realized.

2. Use as few unique addresses as possible to optimize the impact of refreshing.

On-Chip Debugger

The Z8 Encore! devices contain an integrated On-Chip Debugger (OCD) that provides the following advanced debugging features:

- Reading and writing of the register file
- Reading and writing of program and data memory
- Setting of breakpoints and watchpoints
- Executing eZ8 CPU instructions

Architecture

The On-Chip Debugger consists of four primary functional blocks: transmitter, receiver, autobaud detector/generator and debug controller. Figure 20 displays the architecture of the On-Chip Debugger.

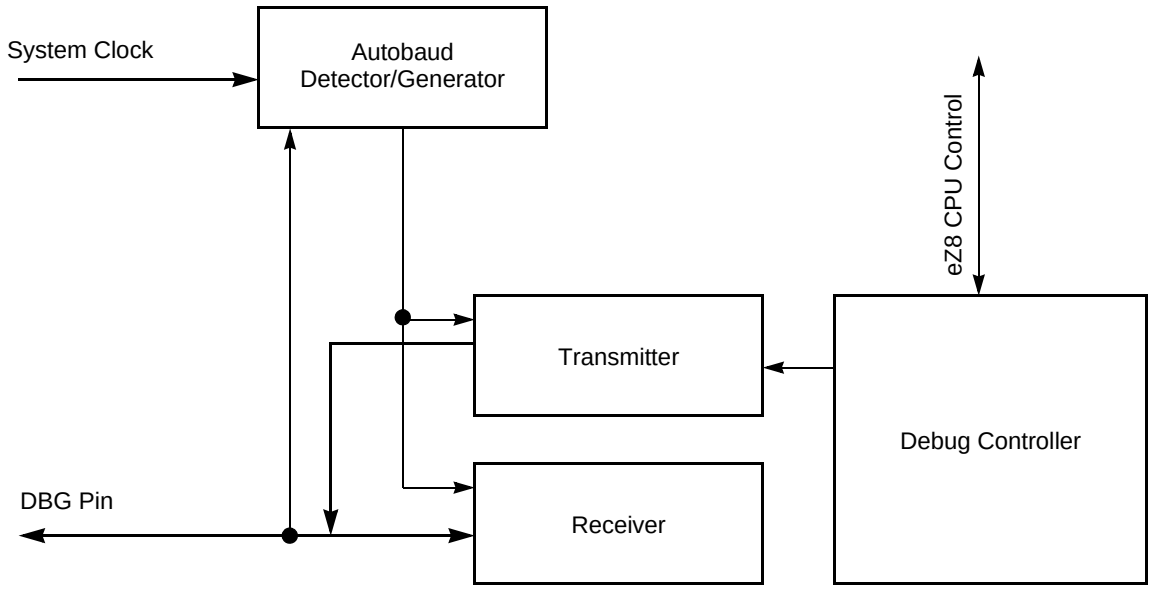

Figure 20. On-Chip Debugger Block Diagram

Operation

The following section describes the operation of the On-Chip Debugging function.

OCD Interface

The On-Chip Debugger uses the DBG pin for communication with an external host. This one-pin interface is a bidirectional open-drain interface that transmits and receives data. Data transmission is half-duplex, which means that transmission and data retrieval cannot occur simultaneously. The serial data on the DBG pin is sent using the standard asynchronous data format defined in RS-232.This pin creates an interface between the Z8 Encore! F0830 Series products and the serial port of a host PC using minimal external hardware. Two different methods for connecting the DBG pin to an RS-232 interface are displayed in Figures 21 and 22. The recommended method is the buffered implementation depicted in Figure 22. The DBG pin must always be connected to V_{DD} through an external pull-up resistor.

Caution: For proper operation of the On-Chip Debugger, all power pins (V_{DD} and AV_{DD}) must be supplied with power and all ground pins (V_{SS} and AV_{SS}) must be properly grounded. The DBG pin is open-drain and must always be connected to V_{DD} through an external pull-up resistor to ensure proper operation.

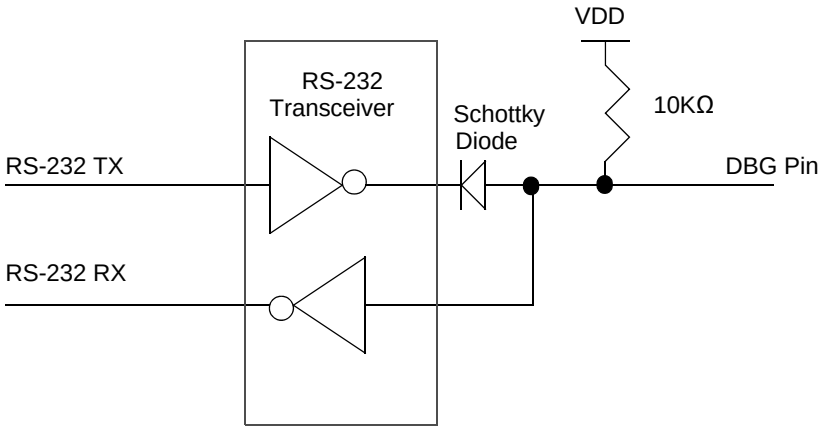

Figure 21. Interfacing the On-Chip Debugger's DBG Pin with an RS-232 Interface, #1 of 2

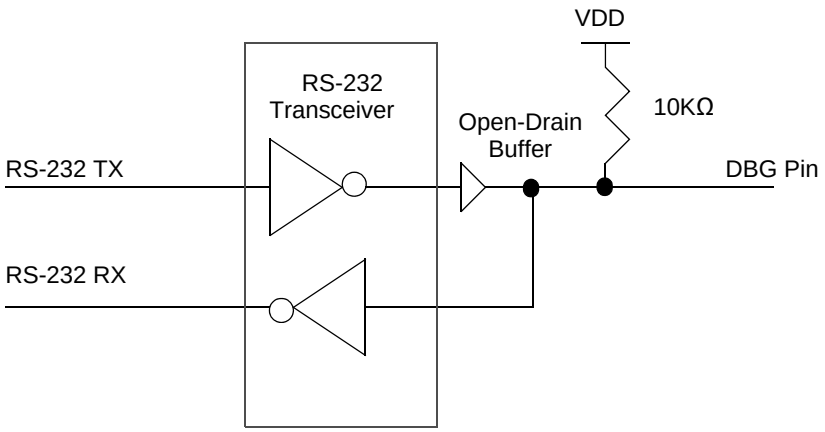

Figure 22. Interfacing the On-Chip Debugger's DBG Pin with an RS-232 Interface, #2 of 2

DEBUG Mode

The operating characteristics of the devices in DEBUG Mode are:

- The eZ8 CPU fetch unit stops, idling the eZ8 CPU, unless directed by the OCD to execute specific instructions
- The system clock operates, unless the device is in Stop Mode
- All enabled on-chip peripherals operate, unless the device is in Stop Mode
- Automatically exits HALT Mode
- Constantly refreshes the Watchdog Timer, if enabled

Entering DEBUG Mode

- The device enters DEBUG Mode after the eZ8 CPU executes a Breakpoint (BRK) instruction
- If the DBG pin is held low during the most recent clock cycle of system reset, the device enters DEBUG Mode on exiting system reset

Exiting DEBUG Mode

The device exits DEBUG Mode following any of these operations:

- Clearing the DBGMODE bit in the OCD Control Register to 0
- Power-On Reset
- Voltage Brown-Out reset

- Watchdog Timer reset
- Asserting the $\overline{\text{RESET}}$ pin Low to initiate a reset
- Driving the DBG pin Low while the device is in Stop Mode initiates a system reset

OCD Data Format

The OCD interface uses the asynchronous data format defined for RS-232. Each character is transmitted as 1 start bit, 8 data bits (least-significant bit first) and 1 stop bit. See Figure 23.

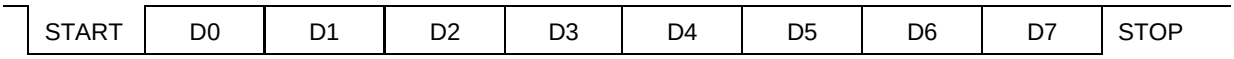

Figure 23. OCD Data Format

OCD Autobaud Detector/Generator

To run over a range of baud rates (data bits per second) with various system clock frequencies, the On-Chip Debugger contains an autobaud detector/generator. After a reset, the OCD is idle until it receives data. The OCD requires that the first character sent from the host is the character `80h`. The character `80h` has eight continuous bits low (one Start bit plus 7 data bits), framed between high bits. The autobaud detector measures this period and sets the OCD baud rate generator accordingly.

The autobaud detector/generator is clocked by the system clock. The minimum baud rate is the system clock frequency divided by 512. For optimal operation with asynchronous datastreams, the maximum recommended baud rate is the system clock frequency divided by 8. The maximum possible baud rate for asynchronous datastreams is the system clock frequency divided by 4, but this theoretical maximum is possible only for low noise designs with clean signals. Table 94 lists minimum and recommended maximum baud rates for sample crystal frequencies.

Table 94. OCD Baud-Rate Limits

System Clock Frequency (MHz)	Recommended Maximum Baud Rate (kbps)	Recommended Standard PC Baud Rate (bps)	Minimum Baud Rate (kbps)
20.0	2500.0	1,843,200	39
1.0	125.0	115,200	1.95
0.032768 (32 KHz)	4.096	2400	0.064

If the OCD receives a serial break (nine or more continuous bits low), the autobaud detector/generator resets. Reconfigure the autobaud detector/generator by sending `80h`.

OCD Serial Errors

The OCD can detect any of the following error conditions on the DBG pin:

- Serial break (a minimum of nine continuous bits Low)
- Framing error (received Stop bit is Low)
- Transmit collision (simultaneous transmission by OCD and host detected by the OCD)

When the OCD detects one of these errors, it aborts any command currently in progress, transmits a four character long serial break back to the host and resets the autobaud detector/generator. A framing error or transmit collision may be caused by the host sending a serial break to the OCD. As a result of the open-drain nature of the interface, returning a serial break back to the host only extends the length of the serial break if the host releases the serial break early.

The host transmits a serial break on the `DBG` pin when first connecting to the Z8 Encore! F0830 Series devices or when recovering from an error. A serial break from the host resets the autobaud generator/detector, but does not reset the OCD Control Register. A serial break leaves the device in DEBUG Mode, if that is the current mode. The OCD is held in reset until the end of the serial break when the DBG pin returns high. Because of the open-drain nature of the DBG pin, the host can send a serial break to the OCD even if the OCD is transmitting a character.

Breakpoints

Execution breakpoints are generated using the BRK instruction (opcode `00h`). When the eZ8 CPU decodes a BRK instruction, it signals the OCD. If breakpoints are enabled, the OCD enters DEBUG Mode and idles the eZ8 CPU. If breakpoints are not enabled, the OCD ignores the BRK signal and the BRK instruction operates as an NOP instruction.

Breakpoints in Flash Memory

The BRK instruction is opcode `00h`, which corresponds to the fully programmed state of a byte in Flash memory. To implement a breakpoint, write `00h` to the required break address overwriting the current instruction. To remove a breakpoint, the corresponding page of Flash memory must be erased and reprogrammed with the original data.

Runtime Counter

The OCD contains a 16-bit runtime counter. It counts system clock cycles between breakpoints. The counter starts counting when the OCD leaves DEBUG Mode and stops counting when it enters DEBUG Mode again or when it reaches the maximum count of FFFFh.

On-Chip Debugger Commands

The host communicates to the On-Chip Debugger by sending OCD commands using the DBG interface. During normal operation, only a subset of the OCD commands are available. In DEBUG Mode, all OCD commands become available unless the user code and control registers are protected by programming the Flash read protect option bit (FRP). The FRP prevents the code in memory from being read out of the Z8 Encore! F0830 Series products. When this option is enabled, several of the OCD commands are disabled.

Table 95 summarizes the On-Chip Debugger commands. This table indicates the commands that operate when the device is not in DEBUG Mode (normal operation) and the commands that are disabled by programming the FRP.

Table 95. On-Chip Debugger Command Summary

Debug Command	Command Byte	Enabled when not in DEBUG Mode?	Disabled by Flash Read Protect Option Bit
Read OCD Revision	00h	Yes	–
Reserved	01h	–	–
Read OCD Status Register	02h	Yes	–
Read Runtime Counter	03h	–	–
Write OCD Control Register	04h	Yes	Cannot clear DBGMODE bit
Read OCD Control Register	05h	Yes	–
Write Program Counter	06h	–	Disabled
Read Program Counter	07h	–	Disabled
Write Register	08h	–	Only writes of the Flash Memory Control registers are allowed. Additionally, only the Mass Erase command is allowed to be written to the Flash Control register.
Read Register	09h	–	Disabled
Write Program Memory	0Ah	–	Disabled
Read Program Memory	0Bh	–	Disabled
Write Data Memory	0Ch	–	Yes
Read Data Memory	0Dh	–	–

Table 95. On-Chip Debugger Command Summary (Continued)

Debug Command	Command Byte	Enabled when not in DEBUG Mode?	Disabled by Flash Read Protect Option Bit
Read Program Memory CRC	0Eh	–	–
Reserved	0Fh	–	–
Step Instruction	10h	–	Disabled
Stuff Instruction	11h	–	Disabled
Execute Instruction	12h	–	Disabled
Reserved	13h–FFh	–	–

In the following bulleted list of OCD commands, data and commands sent from the host to the OCD are identified by `DBG ← Command/Data`. Data sent from the OCD back to the host is identified by `DBG Data`.

Read OCD Revision (00h). The read OCD revision command determines the version of the On-Chip Debugger. If OCD commands are added, removed or changed this revision number changes.

```
DBG ←00h
DBG → OCDRev[15:8] (Major revision number)
DBG → OCDRev[7:0] (Minor revision number)
```

Read OCD Status Register (02h). The read OCD Status Register command reads the OCDSTAT register.

```
DBG ← 02h
DBG → OCDSTAT[7:0]
```

Read Runtime Counter (03h). The runtime counter counts system clock cycles in between breakpoints. The 16-bit runtime counter counts from `0000h` and stops at the maximum count of `FFFFh`. The runtime counter is overwritten during the write memory, read memory, write register, read register, read memory CRC, step instruction, stuff instruction and execute instruction commands.

```
DBG ← 03h
DBG → RuntimeCounter[15:8]
DBG → RuntimeCounter[7:0]
```

Write OCD Control Register (04h). The write OCD Control Register command writes the data that follows to the OCDCTL register. When the Flash read protect option bit is enabled, the DBGMODE bit (`OCDCTL`[7]) can only be set to 1, it cannot be cleared to 0. To return the device to normal operating mode, the device must be reset.

```
DBG ← 04h
DBG ← OCDCTL[7:0]
```

Read OCD Control Register (05h). The read OCD Control Register command reads the value of the OCDCTL register.

```
DBG ← 05h
DBG → OCDCTL[7:0]
```

Write Program Counter (06h). The write program counter command, writes the data that follows to the eZ8 CPU's program counter (PC). If the device is not in DEBUG Mode or if the Flash read protect option bit is enabled, the program counter (PC) values are discarded.

```
DBG ← 06h
DBG ← ProgramCounter[15:8]
DBG ← ProgramCounter[7:0]
```

Read Program Counter (07h). The read program counter command, reads the value in the eZ8 CPUs program counter (PC). If the device is not in DEBUG Mode or if the Flash read protect option bit is enabled, this command returns `FFFFh`.

```
DBG ← 07h
DBG → ProgramCounter[15:8]
DBG → ProgramCounter[7:0]
```

Write Register (08h). The write register command, writes data to the register file. Data can be written 1–256 bytes at a time (256 bytes can be written by setting size to 0). If the device is not in DEBUG Mode, the address and data values are discarded. If the Flash read protect option bit is enabled, only writes to the Flash control registers are allowed and all other register write data values are discarded.

```
DBG ← 08h
DBG ← {4'h0,Register Address[11:8]}
DBG ← Register Address[7:0]
DBG ← Size[7:0]
DBG ← 1–256 data bytes
```

Read Register (09h). The read register command, reads data from the register file. Data can be read 1–256 bytes at a time (256 bytes can be read by setting size to 0). If the device is not in DEBUG Mode or if the Flash read protect option bit is enabled, this command returns `FFh` for all of the data values.

```
DBG ← 09h
DBG ← {4'h0,Register Address[11:8]
DBG ← Register Address[7:0]
DBG ← Size[7:0]
DBG → 1–256 data bytes
```

Write Program Memory (0Ah). The write program memory command, writes data to program memory. This command is equivalent to the LDC and LDCI instructions. Data can be written 1–65536 bytes at a time (65536 bytes can be written by setting size to 0). The on-chip Flash Controller must be written to and unlocked for the programming operation to occur. If the Flash Controller is not unlocked, the data is discarded. If the device is not in DEBUG Mode or if the Flash read protect option bit is enabled, the data is discarded.

```
DBG ← 0Ah
DBG ← Program Memory Address[15:8]
DBG ← Program Memory Address[7:0]
DBG ← Size[15:8]
DBG ← Size[7:0]
DBG ← 1–65536 data bytes
```

Read Program Memory (0Bh). The read program memory command, reads data from program memory. This command is equivalent to the LDC and LDCI instructions. Data can be read 1–65536 bytes at a time (65536 bytes can be read by setting size to 0). If the device is not in DEBUG Mode or if the Flash read protect option bit is enabled, this command returns `FFh` for the data.

```
DBG ← 0Bh
DBG ← Program Memory Address[15:8]
DBG ← Program Memory Address[7:0]
DBG ← Size[15:8]
DBG ← Size[7:0]
DBG → 1–65536 data bytes
```

Write Data Memory (0Ch). The write data memory command, writes data to data memory. This command is equivalent to the LDE and LDEI instructions. Data can be written 1–65536 bytes at a time (65536 bytes can be written by setting size to 0). If the device is not in DEBUG Mode or if the flash read protect option bit is enabled, the data is discarded.

```
DBG ← 0Ch
DBG ← Data Memory Address[15:8]
DBG ← Data Memory Address[7:0]
DBG ← Size[15:8]
DBG ← Size[7:0]
DBG ← 1–65536 data bytes
```

Read Data Memory (0Dh). The read data memory command, reads from data memory. This command is equivalent to the LDE and LDEI instructions. Data can be read from 1 to 65536 bytes at a time (65536 bytes can be read by setting size to 0). If the device is not in DEBUG Mode, this command returns `FFh` for the data.

```
DBG ← 0Dh
DBG ← Data Memory Address[15:8]
DBG ← Data Memory Address[7:0]
DBG ← Size[15:8]
DBG ← Size[7:0]
DBG → 1–65536 data bytes
```

Read Program Memory CRC (0Eh). The read program memory CRC command, computes and returns the cyclic redundancy check (CRC) of program memory using the 16-bit CRC-CCITT polynomial. If the device is not in DEBUG Mode, this command returns `FFFFh` for the CRC value. Unlike the other OCD read commands, there is a delay from issuing of the command until the OCD returns the data. The OCD reads program memory, calculates the CRC value and returns the result. The delay is a function of program mem-

ory size and is approximately equal to the system clock period multiplied by the number of bytes in program memory.

```
DBG ← 0Eh
DBG → CRC[15:8]
DBG → CRC[7:0]
```

Step Instruction (10h). The step instruction command, steps one assembly instruction at the current program counter (PC) location. If the device is not in DEBUG Mode or the Flash read protect option bit is enabled, the OCD ignores this command.

```
DBG ← 10h
```

Stuff Instruction (11h). The stuff instruction command, steps one assembly instruction and allows specification of the first byte of the instruction. The remaining 0–4 bytes of the instruction are read from program memory. This command is useful for stepping over instructions where the first byte of the instruction has been overwritten by a breakpoint. If the device is not in DEBUG Mode or the Flash read protect option bit is enabled, the OCD ignores this command.

```
DBG ← 11h
DBG ← opcode[7:0]
```

Execute Instruction (12h). The execute instruction command allows sending an entire instruction to be executed to the eZ8 CPU. This command can also step over breakpoints. The number of bytes to send for the instruction depends on the opcode. If the device is not in DEBUG Mode or the Flash read protect option bit is enabled, this command reads and discards one byte.

```
DBG ← 12h
DBG ← 1–5 byte opcode
```

On-Chip Debugger Control Register Definitions

This section describes the features of the On-Chip Debugger Control and Status registers.

OCD Control Register

The OCD Control Register controls the state of the On-Chip Debugger. This register is used to enter or exit DEBUG Mode and to enable the BRK instruction. It can also reset the Z8 Encore! F0830 Series device.

A reset and stop function can be achieved by writing `81h` to this register. A *reset and go* function can be achieved by writing `41h` to this register. If the device is in DEBUG Mode, a run function can be implemented by writing `40h` to this register.

Table 96. OCD Control Register (OCDCTL)

Bit	7	6	5	4	3	2	1	0
Field	DBGMODE	BRKEN	DBGACK	Reserved				RST
RESET	0	0	0	0	0	0	0	0
R/W	R/W	R/W	R/W	R	R	R	R	R/W

Bit	Description
[7] DBGMODE	**DEBUG Mode** The device enters DEBUG Mode when this bit is 1. When in DEBUG Mode, the eZ8 CPU stops fetching new instructions. Clearing this bit causes the eZ8 CPU to restart. This bit is automatically set when a BRK instruction is decoded and breakpoints are enabled. If the Flash read protect option bit is enabled, this bit can only be cleared by resetting the device. It cannot be written to 0. 0 = The Z8 Encore! F0830 Series device is operating in Normal Mode. 1 = The Z8 Encore! F0830 Series device is in DEBUG Mode.
[6] BRKEN	**Breakpoint Enable** This bit controls the behavior of the BRK instruction (opcode 00h). By default, breakpoints are disabled and the BRK instruction behaves similar to an NOP instruction. If this bit is 1 when a BRK instruction is decoded, the DBGMODE bit of the OCDCTL Register is automatically set to 1. 0 = Breakpoints are disabled. 1 = Breakpoints are enabled.
[5] DBGACK	**Debug Acknowledge** This bit enables the debug acknowledge feature. If this bit is set to 1, the OCD sends a Debug acknowledge character (FFh) to the host when a breakpoint occurs. 0 = Debug acknowledge is disabled. 1 = Debug acknowledge is enabled.
[4:1]	**Reserved** These bits are reserved and must be programmed to 0000.
[0] RST	**Reset** Setting this bit to 1 resets the Z8F04xA family device. The device goes through a normal Power-On Reset sequence with the exception that the On-Chip Debugger is not reset. This bit is automatically cleared to 0 at the end of the reset sequence. 0 = No effect. 1 = Reset the Flash read protect option bit device.

OCD Status Register

The OCD Status Register reports status information about the current state of the debugger and the system.

Table 97. OCD Status Register (OCDSTAT)

Bit	7	6	5	4	3	2	1	0
Field	DBG	HALT	FRPENB	Reserved				
RESET	0	0	0	0	0	0	0	0
R/W	R	R	R	R	R	R	R	R

Bit	Description
[7] DBG	**Debug Status** 0 = Normal Mode. 1 = DEBUG Mode.
[6] HALT	**HALT Mode** 0 = Not in HALT Mode. 1 = In HALT Mode.
[5] FRPENB	**Flash Read Protect Option Bit Enable** 0 = FRP bit enabled, that allows disabling of many OCD commands. 1 = FRP bit has no effect.
[4:0]	**Reserved** These bits are reserved and must be programmed to 00000.

Oscillator Control

The Z8 Encore! F0830 Series device uses five possible clocking schemes. Each one of these is user-selectable.

- On-chip precision trimmed RC oscillator
- On-chip oscillator using off-chip crystal or resonator
- On-chip oscillator using external RC network
- External clock drive
- On-chip low precision Watchdog Timer Oscillator

In addition, Z8 Encore! F0830 Series devices contain clock failure detection and recovery circuitry, allowing continued operation despite a failure of the primary oscillator.

Operation

This chapter discusses the logic used to select the system clock and handle primary oscillator failures. A description of the specific operation of each oscillator is outlined further in this document.

System Clock Selection

The oscillator control block selects from the available clocks. *Table 98* describes each clock source and its usage.

Table 98. Oscillator Configuration and Selection

Clock Source	Characteristics	Required Setup
Internal precision RC oscillator	• 32.8 kHz or 5.53 MHz • ± 4% accuracy when trimmed • No external components required	• Unlock and write to the Oscillator Control Register (OSCCTL) to enable and select oscillator at either 5.53 MHz or 32.8 kHz
External crystal/resonator	• 32 kHz to 20 MHz • Very high accuracy (dependent on crystal or resonator used) • Requires external components	• Configure Flash option bits for correct external OSCILLATOR Mode • Unlock and write OSCCTL to enable crystal oscillator, wait for it to stabilize and select as system clock (if the XTLDIS option bit has been de-asserted, no waiting is required)
External RC oscillator	• 32 kHz to 4 MHz • Accuracy dependent on external components	• Configure Flash option bits for correct external OSCILLATOR Mode • Unlock and write OSCCTL to enable crystal oscillator and select as system clock
External clock drive	• 0 to 20 MHz • Accuracy dependent on external clock source	• Write GPIO registers to configure PB3 pin for external clock function • Unlock and write OSCCTL to select external system clock • Apply external clock signal to GPIO
Internal Watchdog Timer Oscillator	• 10 kHz nominal • ± 40% accuracy; no external components required • Low power consumption	• Enable WDT if not enabled and wait until WDT oscillator is operating. • Unlock and write to the Oscillator Control Register (OSCCTL) to enable and select oscillator

Caution: Unintentional accesses to the Oscillator Control Register can actually stop the chip by switching to a nonfunctioning oscillator. To prevent this condition, the oscillator control block employs a register unlocking/locking scheme.

OSC Control Register Unlocking/Locking

To write the Oscillator Control Register, unlock it by making two writes to the OSCCTL Register with the values `E7h` followed by `18h`. A third write to the OSCCTL Register changes the value of the actual register and returns the register to a Locked state. Any other sequence of Oscillator Control Register writes have no effect. The values written to unlock the register must be ordered correctly, but are not necessarily consecutive. It is possible to write to or read from other registers within the unlocking/locking operation.

When selecting a new clock source, the primary oscillator failure detection circuitry and the Watchdog Timer Oscillator failure circuitry must be disabled. If POFEN and WOFEN are not disabled prior to a clock switch-over, it is possible to generate an interrupt for a failure of either oscillator. The failure detection circuitry can be enabled anytime after a successful write of OSCSEL in the Oscillator Control Register.

The Internal Precision Oscillator is enabled by default. If the user code changes to a different oscillator, it may be appropriate to disable the IPO for power savings. Disabling the IPO does not occur automatically.

Clock Failure Detection and Recovery

Primary Oscillator Failure

The Z8F04xA family devices can generate nonmaskable interrupt-like events when the primary oscillator fails. To maintain system function in this situation, the clock failure recovery circuitry automatically forces the Watchdog Timer Oscillator to drive the system clock. The Watchdog Timer Oscillator must be enabled to allow the recovery. Although this oscillator runs at a much slower speed than the original system clock, the CPU continues to operate, allowing execution of a clock failure vector and software routines that either remedy the oscillator failure or issue a failure alert. This automatic switch-over is not available if the Watchdog Timer is the primary oscillator. It is also unavailable if the Watchdog Timer Oscillator is disabled, though it is not necessary to enable the Watchdog Timer reset function outlined in the Watchdog Timer chapter of this document.

The primary oscillator failure detection circuitry asserts if the system clock frequency drops below 1 KHz ±50%. If an external signal is selected as the system oscillator, it is possible that a very slow but nonfailing clock can generate a failure condition. Under these conditions, do not enable the clock failure circuitry (POFEN must be deasserted in the OSCCTL Register).

Watchdog Timer Failure

In the event of failure of a Watchdog Timer Oscillator, a similar nonmaskable interrupt-like event is issued. This event does not trigger an attendant clock switch-over, but alerts the CPU of the failure. After a Watchdog Timer failure, it is no longer possible to detect a primary oscillator failure. The failure detection circuitry does not function if the Watchdog Timer is used as the primary oscillator or if the Watchdog Timer Oscillator has been disabled. For either of these cases, it is necessary to disable the detection circuitry by deasserting the WDFEN bit of the OSCCTL Register.

The Watchdog Timer Oscillator failure detection circuit counts system clocks while looking for a Watchdog Timer clock. The logic counts 8004 system clock cycles before determining that a failure has occurred. The system clock rate determines the speed at which the Watchdog Timer failure is detected. A very slow system clock results in very slow detection times.

Caution: It is possible to disable the clock failure detection circuitry as well as all functioning clock sources. In this case, the Z8 Encore! F0830 Series device ceases functioning and can only be recovered by power-on-reset.

Oscillator Control Register Definitions

The following section provides the bit definitions for the Oscillator Control Register.

Oscillator Control Register

The Oscillator Control Register (OSCCTL) enables/disables the various oscillator circuits, enables/disables the failure detection/recovery circuitry and selects the primary oscillator, which becomes the system clock.

The Oscillator Control Register must be unlocked before writing. Writing the two step sequence `E7h` followed by `18h` to the Oscillator Control Register unlocks it. The register is locked at successful completion of a register write to the OSCCTL.

Figure 24 displays the oscillator control clock switching flow. See Table 117 on page 189 to review the waiting times of various oscillator circuits.

Table 99. Oscillator Control Register (OSCCTL)

Bit	7	6	5	4	3	2	1	0
Field	INTEN	XTLEN	WDTEN	POFEN	WDFEN	SCKSEL		
RESET	1	0	1	0	0	0	0	0
R/W	R/W	R/W	R/W	R/W	R/W	R/W	R/W	R/W
Address	F86h							

Bit	Description
[7] INTEN	**Internal Precision Oscillator Enable** 1 = Internal Precision Oscillator is enabled. 0 = Internal Precision Oscillator is disabled.
[6] XTLEN	**Crystal Oscillator Enable** This setting overrides the GPIO register control for PA0 and PA1. 1 = Crystal oscillator is enabled. 0 = Crystal oscillator is disabled.
[5] WDTEN	**Watchdog Timer Oscillator Enable** 1 = Watchdog Timer Oscillator is enabled. 0 = Watchdog Timer Oscillator is disabled.

Bit	Description (Continued)
[4] POFEN	**Primary Oscillator Failure Detection Enable** 1 = Failure detection and recovery of primary oscillator is enabled. 0 = Failure detection and recovery of primary oscillator is disabled.
[3] WDFEN	**Watchdog Timer Oscillator Failure Detection Enable** 1 = Failure detection of Watchdog Timer Oscillator is enabled. 0 = Failure detection of Watchdog Timer Oscillator is disabled.
[2:0] SCKSEL	**System Clock Oscillator Select** 000 = Internal Precision Oscillator functions as system clock at 5.53 MHz. 001 = Internal Precision Oscillator functions as system clock at 32 kHz. 010 = Crystal oscillator or external RC oscillator functions as system clock. 011 = Watchdog Timer Oscillator functions as system clock. 100 = External clock signal on PB3 functions as system clock. 101 = Reserved. 110 = Reserved. 111 = Reserved.

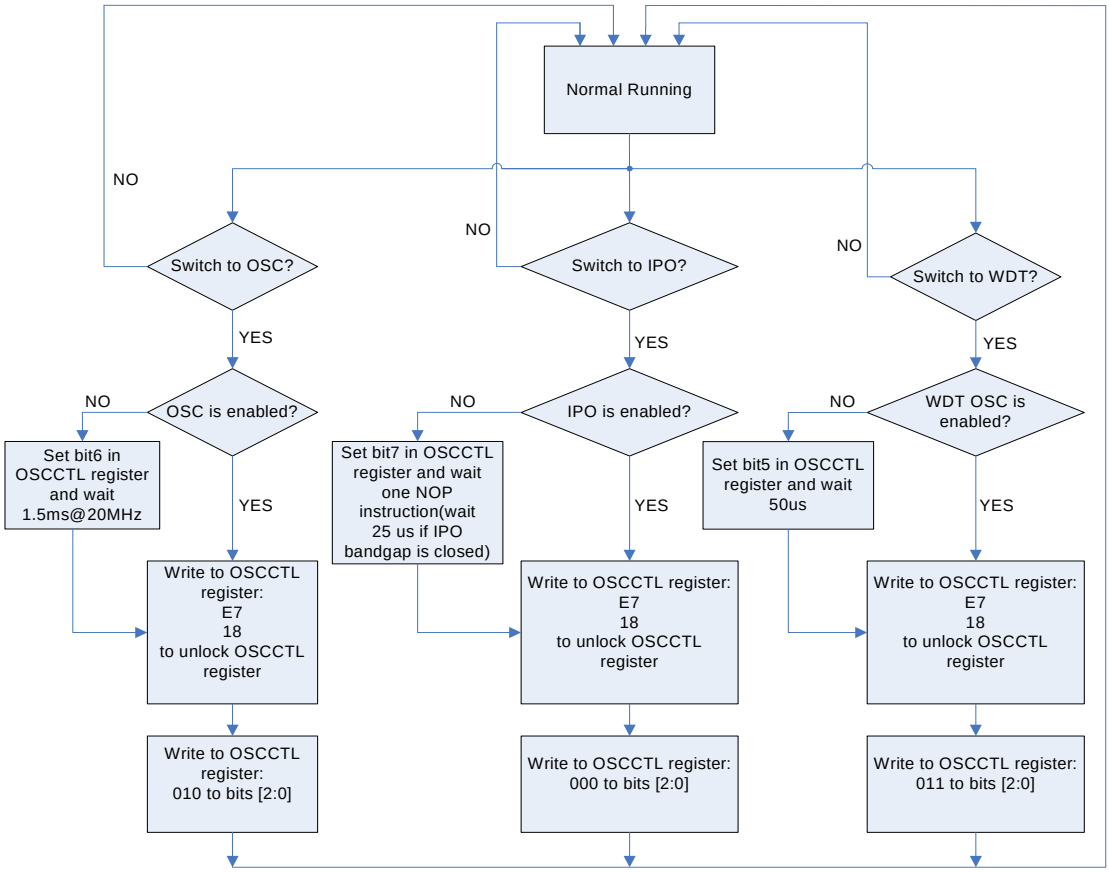

Figure 24. Oscillator Control Clock Switching Flow Chart

Crystal Oscillator

The products in the Z8 Encore! F0830 Series contain an on-chip crystal oscillator for use with external crystals with 32kHz to 20MHz frequencies. In addition, the oscillator supports external RC networks with oscillation frequencies up to 4MHz or ceramic resonators with frequencies up to 8MHz. The on-chip crystal oscillator can be used to generate the primary system clock for the internal eZ8 CPU and the majority of its on-chip peripherals. Alternatively, the X_{IN} input pin can also accept a CMOS-level clock input signal (32kHz–20MHz). If an external clock generator is used, the X_{OUT} pin must remain unconnected. The on-chip crystal oscillator also contains a clock filter function. To see the settings for this clock filter, see Table 90 on page 133. By default, however, this clock filter is disabled; therefore, no divide to the input clock (namely, the frequency of the signal on the X_{IN} input pin) can determine the frequency of the system clock when using the default settings.

Note: Although the X_{IN} pin can be used as an input for an external clock generator, the CLKIN pin is better suited for such use. See the System Clock Selection section on page 151 for more information.

Operating Modes

The Z8 Encore! F0830 Series products support the following four OSCILLATOR Modes:

- Minimum power for use with very low frequency crystals (32kHz to 1MHz)
- Medium power for use with medium frequency crystals or ceramic resonators (0.5MHz to 8MHz)
- Maximum power for use with high frequency crystals (8MHz to 20MHz)
- On-chip oscillator configured for use with external RC networks (<4MHz)

The OSCILLATOR Mode is selected using user-programmable Flash option bits. See the Flash Option Bits chapter on page 124 for more information.

Crystal Oscillator Operation

The XTLDIS Flash option bit controls whether the crystal oscillator is enabled during reset. The crystal may later be disabled after reset if a new oscillator has been selected as the system clock. If the crystal is manually enabled after reset through the OSCCTL Reg-

ister, the user code must wait at least 5000 IPO cycles for the crystal to stabilize. After this period, the crystal oscillator may be selected as the system clock.

Figure 25 displays a recommended configuration for connection with an external fundamental-mode, parallel-resonant crystal operating at 20 MHz. Recommended 20 MHz crystal specifications are provided in Table 100. Resistor R_1 is optional and limits total power dissipation by the crystal. Printed circuit board layout must add no more than 4 pF of stray capacitance to either the X_{IN} or X_{OUT} pins. If oscillation does not occur, reduce the values of capacitors C_1 and C_2 to decrease loading.

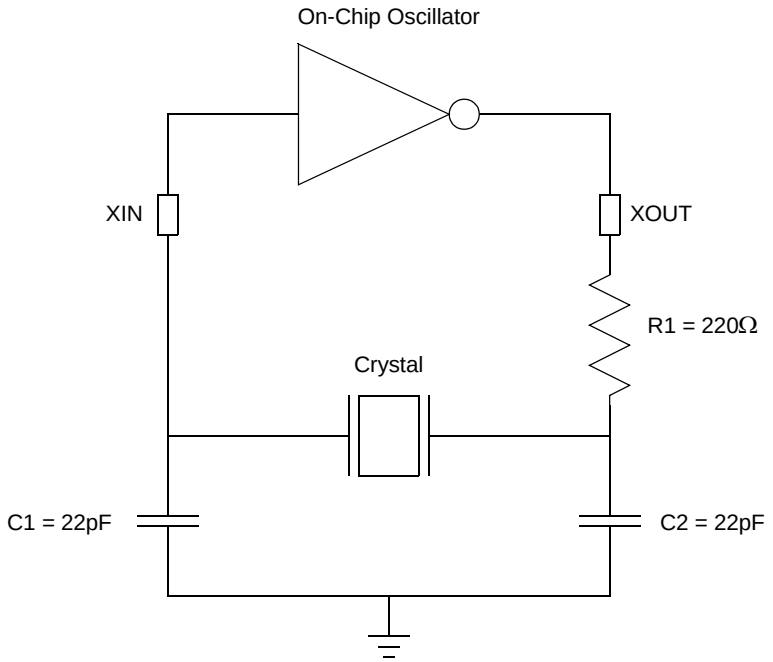

Figure 25. Recommended 20 MHz Crystal Oscillator Configuration

Table 100. Recommended Crystal Oscillator Specifications

Parameter	Value	Units	Comments
Frequency	20	MHz	
Resonance	Parallel		
Mode	Fundamental		
Series Resistance (R_S)	60	Ω	Maximum
Load Capacitance (C_L)	30	pF	Maximum
Shunt Capacitance (C_0)	7	pF	Maximum
Drive Level	1	mW	Maximum

Oscillator Operation with an External RC Network

Figure 26 displays a recommended configuration for connection with an external resistor-capacitor (RC) network.

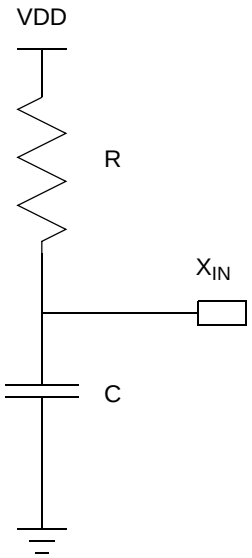

Figure 26. Connecting the On-Chip Oscillator to an External RC Network

An external resistance value of 45 kΩ is recommended for oscillator operation with an external RC network. The minimum resistance value to ensure operation is 40 kΩ. The typical oscillator frequency can be estimated from the values of the resistor (R in kΩ) and capacitor (C in pF) elements using the following equation:

$$\text{Oscillator Frequency (kHz)} = \frac{1\times10^6}{(0.4\times R\times C)+(4\times C)}$$

Figure 27 displays the typical (3.3 V and 25°C) oscillator frequency as a function of the capacitor (C in pF) employed in the RC network assuming a 45 kΩ external resistor. For very small values of C, the parasitic capacitance of the oscillator X_{IN} pin and the printed circuit board should be included in the estimation of the oscillator frequency.

It is possible to operate the RC oscillator using only the parasitic capacitance of the package and printed circuit board. To minimize sensitivity to external parasitics, external capacitance values in excess of 20 pF are recommended.

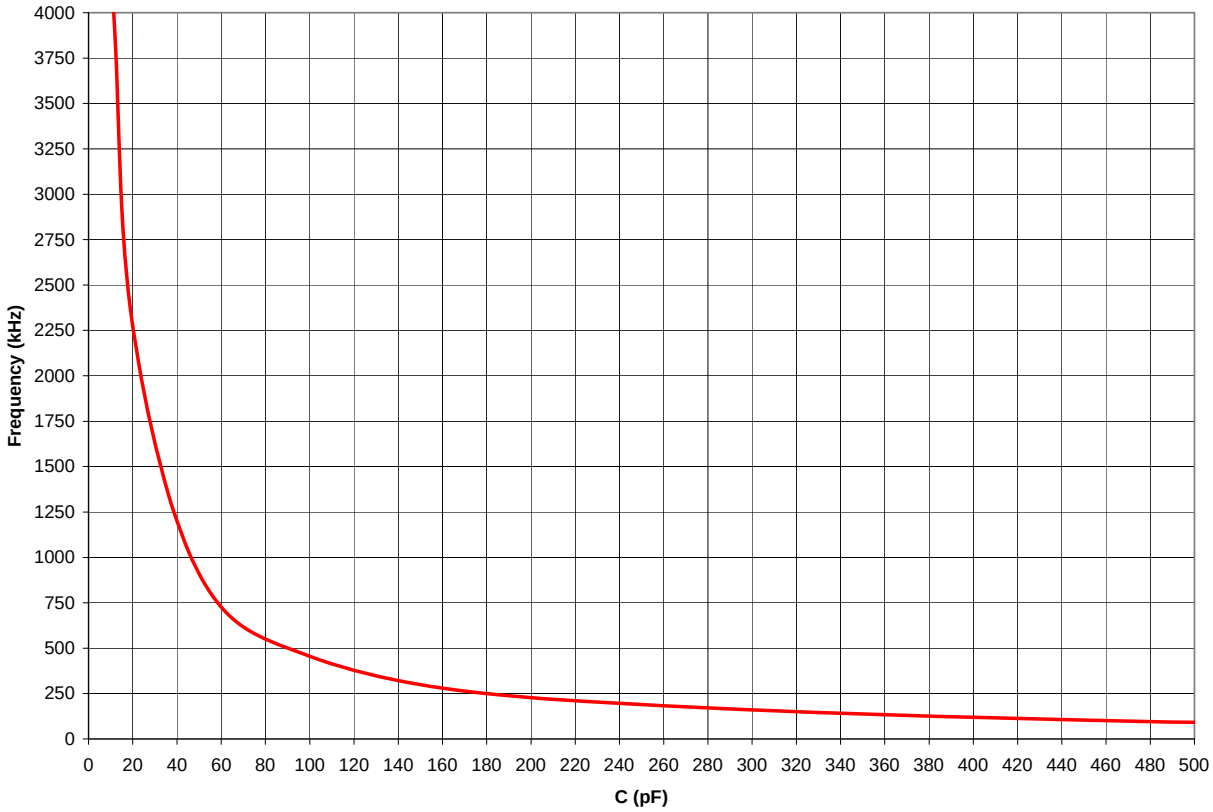

Figure 27. Typical RC Oscillator Frequency as a Function of External Capacitance with a 45 kΩ Resistor

Caution: When using the external RC OSCILLATOR Mode, the oscillator can stop oscillating if the power supply drops below 2.7 V but before it drops to the Voltage Brown-Out threshold. The oscillator resumes oscillation when the supply voltage exceeds 2.7 V.

Internal Precision Oscillator

The Internal Precision Oscillator (IPO) is designed for use without external components. The user can either manually trim the oscillator for a nonstandard frequency or use the automatic factory-trimmed version to achieve a 5.53 MHz frequency with ±4% accuracy and 45%~55% duty cycle over the operating temperature and supply voltage of the device. The maximum start-up time of the IPO is 25 µs. IPO features include:

- On-chip RC oscillator that does not require external components
- Output frequency of either 5.53 MHz or 32.8 kHz (contains both a FAST and a SLOW mode)
- Trimming possible through Flash option bits, with user override
- Elimination of crystals or ceramic resonators in applications where high timing accuracy is not required

Operation

The internal oscillator is an RC relaxation oscillator with a minimized sensitivity to power supply variations. By using ratio-tracking thresholds, the effect of power supply voltage is cancelled out. The dominant source of oscillator error is the absolute variance of chip-level fabricated components, such as capacitors. An 8-bit trimming register, incorporated into the design, compensates for absolute variation of oscillator frequency. Once trimmed, the oscillator frequency is stable and does not require subsequent calibration. Trimming was performed during manufacturing and is not necessary for the user to repeat unless a frequency other than 5.53 MHz (FAST mode) or 32.8 kHz (SLOW mode) is required.

Note: The user can power down the IPO block for minimum system power.

By default, the oscillator is configured through the Flash option bits. However, the user code can override these trim values, as described in the Trim Bit Address Space section on page 129.

Select one of two frequencies for the oscillator: 5.53 MHz or 32.8 kHz, using the OSCSEL bits described in the Oscillator Control chapter on page 151.

eZ8 CPU Instruction Set

This chapter describes the following features of the eZ8 CPU instruction set:

Assembly Language Programming Introduction: see page 162

Assembly Language Syntax: see page 163

eZ8 CPU Instruction Notation: see page 164

eZ8 CPU Instruction Classes: see page 166

eZ8 CPU Instruction Summary: see page 171

Assembly Language Programming Introduction

The eZ8 CPU assembly language provides a means for writing an application program without concern for actual memory addresses or machine instruction formats. A program written in assembly language is called a source program. Assembly language allows the use of symbolic addresses to identify memory locations. It also allows mnemonic codes (op codes and operands) to represent the instructions themselves. The op codes identify the instruction while the operands represent memory locations, registers or immediate data values.

Each assembly language program consists of a series of symbolic commands called statements. Each statement contains labels, operations, operands and comments.

Labels can be assigned to a particular instruction step in a source program. The label identifies that step in the program as an entry point for use by other instructions.

The assembly language also includes assembler directives that supplement the machine instruction. The assembler directives, or pseudo-ops, are not translated into a machine instruction. Rather, these pseudo-ops are interpreted as directives that control or assist the assembly process.

The source program is processed (assembled) by the assembler to obtain a machine language program called the object code. The object code is executed by the eZ8 CPU. An example segment of an assembly language program is provided in the following example.

Assembly Language Source Program Example

```
JP START          ; Everything after the semicolon is a comment.
START:            ; A label called “START”. The first instruction (JP START) in this
                  ; example causes program execution to jump to the point within the
                  ; program where the START label occurs.
LD R4, R7         ; A Load (LD) instruction with two operands. The first operand,
                  ; Working register R4, is the destination. The second operand,
                  ; Working register R7, is the source. The contents of R7 is
                  ; written into R4.
LD 234h, #%01     ; Another Load (LD) instruction with two operands.
                  ; The first operand, extended mode register Address 234h,
                  ; identifies the destination. The second operand, immediate data
                  ; value 01h, is the source. The value 01h is written into the
                  ; register at address 234h.
```

Assembly Language Syntax

For proper instruction execution, eZ8 CPU assembly language syntax requires that the operands be written as *destination*, *source*. After assembly, the object code usually reflects the operands in the order *source*, *destination*, but ordering is op code-dependent.

The following examples illustrate the format of some basic assembly instructions and the resulting object code produced by the assembler. This binary format must be followed by users that prefer manual program coding or intend to implement their own assembler.

Example 1

If the contents of registers `43h` and `08h` are added and the result is stored in `43h`, the assembly syntax and resulting object code is:

Table 101. Assembly Language Syntax Example 1

Assembly Language Code	ADD	43h,	08h	(ADD dst, src)
Object Code	04	08	43	(OPC src, dst)

Example 2

In general, when an instruction format requires an 8-bit register address, the address can specify any register location in the range 0–255 or, using escaped mode addressing, a working register R0–R15. If the contents of register 43h and working register R8 are added and the result is stored in 43h, the assembly syntax and resulting object code is:

Table 102. Assembly Language Syntax Example 2

Assembly Language Code	ADD	43h,	R8	(ADD dst, src)
Object Code	04	E8	43	(OPC src, dst)

See the device specific product specification to determine the exact register file range available. The register file size varies, depending on the device type.

eZ8 CPU Instruction Notation

In the eZ8 CPU instruction summary and description sections, the operands, condition codes, status flags and address modes are represented by the notational shorthand listed in Table 103.

Table 103. Notational Shorthand

Notation	Description	Operand	Range
b	Bit	b	b represents a value from 0 to 7 (000b to 111b).
cc	Condition Code	—	See condition codes overview in the eZ8 CPU User Manual.
DA	Direct Address	Addrs	Addrs. represents a number in the range of 0000h to FFFFh.
ER	Extended Addressing Register	Reg	Reg. represents a number in the range of 000h to FFFh.
IM	Immediate Data	#Data	Data is a number between 00h to FFh.
Ir	Indirect Working Register	@Rn	n = 0 –15.
IR	Indirect Register	@Reg	Reg. represents a number in the range of 00h to FFh.
Irr	Indirect Working Register Pair	@RRp	p = 0, 2, 4, 6, 8, 10, 12 or 14.
IRR	Indirect Register Pair	@Reg	Reg. represents an even number in the range 00h to FEh.
p	Polarity	p	Polarity is a single bit binary value of either 0B or 1B.
r	Working Register	Rn	n = 0 – 15.

Table 103. Notational Shorthand (Continued)

Notation	Description	Operand	Range
R	Register	Reg	Reg. represents a number in the range of 00h to FFh
RA	Relative Address	X	X represents an index in the range of +127 to –128 which is an offset relative to the address of the next instruction
rr	Working Register Pair	RRp	p = 0, 2, 4, 6, 8, 10, 12 or 14
RR	Register Pair	Reg	Reg. represents an even number in the range of 00h to FEh
Vector	Vector Address	Vector	Vector represents a number in the range of 00h to FFh
X	Indexed	#Index	The register or register pair to be indexed is offset by the signed Index value (#Index) in a +127 to –128 range.

Table 104 contains additional symbols that are used throughout the instruction summary and instruction set description sections.

Table 104. Additional Symbols

Symbol	Definition
dst	Destination Operand
src	Source Operand
@	Indirect Address Prefix
SP	Stack Pointer
PC	Program Counter
FLAGS	Flags Register
RP	Register Pointer
#	Immediate Operand Prefix
B	Binary Number Suffix
%	Hexadecimal Number Prefix
H	Hexadecimal Number Suffix

Assignment of a value is indicated by an arrow, as shown in the following example.

dst ← dst + src

This example indicates that the source data is added to the destination data; the result is stored in the destination location.

eZ8 CPU Instruction Classes

eZ8 CPU instructions can be divided functionally into the following groups:

- Arithmetic
- Bit manipulation
- Block transfer
- CPU control
- Load
- Logical
- Program control
- Rotate and shift

Tables 105 through 112 contain the instructions belonging to each group and the number of operands required for each instruction. Some instructions appear in more than one table as these instructions can be considered as a subset of more than one category. Within these tables, the source operand is identified as *src*, the destination operand is *dst* and a condition code is *cc*.

Table 105. Arithmetic Instructions

Mnemonic	Operands	Instruction
ADC	dst, src	Add with Carry
ADCX	dst, src	Add with Carry using Extended Addressing
ADD	dst, src	Add
ADDX	dst, src	Add using Extended Addressing
CP	dst, src	Compare
CPC	dst, src	Compare with Carry
CPCX	dst, src	Compare with Carry using Extended Addressing
CPX	dst, src	Compare using Extended Addressing
DA	dst	Decimal Adjust
DEC	dst	Decrement
DECW	dst	Decrement Word
INC	dst	Increment

Table 105. Arithmetic Instructions (Continued)

Mnemonic	Operands	Instruction
INCW	dst	Increment Word
MULT	dst	Multiply
SBC	dst, src	Subtract with Carry
SBCX	dst, src	Subtract with Carry using Extended Addressing
SUB	dst, src	Subtract
SUBX	dst, src	Subtract using Extended Addressing

Table 106. Bit Manipulation Instructions

Mnemonic	Operands	Instruction
BCLR	bit, dst	Bit Clear
BIT	p, bit, dst	Bit Set or Clear
BSET	bit, dst	Bit Set
BSWAP	dst	Bit Swap
CCF	—	Complement Carry Flag
RCF	—	Reset Carry Flag
SCF	—	Set Carry Flag
TCM	dst, src	Test Complement Under Mask
TCMX	dst, src	Test Complement Under Mask using Extended Addressing
TM	dst, src	Test Under Mask
TMX	dst, src	Test Under Mask using Extended Addressing

Table 107. Block Transfer Instructions

Mnemonic	Operands	Instruction
LDCI	dst, src	Load Constant to/from Program Memory and Auto-Increment Addresses
LDEI	dst, src	Load External Data to/from Data Memory and Auto-Increment Addresses

Table 108. CPU Control Instructions

Mnemonic	Operands	Instruction
ATM	—	Atomic Execution
CCF	—	Complement Carry Flag
DI	—	Disable Interrupts
EI	—	Enable Interrupts
HALT	—	HALT Mode
NOP	—	No Operation
RCF	—	Reset Carry Flag
SCF	—	Set Carry Flag
SRP	src	Set Register Pointer
STOP	—	Stop Mode
WDT	—	Watchdog Timer Refresh

Table 109. Load Instructions

Mnemonic	Operands	Instruction
CLR	dst	Clear
LD	dst, src	Load
LDC	dst, src	Load Constant to/from Program Memory
LDCI	dst, src	Load Constant to/from Program Memory and Auto-Increment Addresses
LDE	dst, src	Load External Data to/from Data Memory
LDEI	dst, src	Load External Data to/from Data Memory and Auto-Increment Addresses
LDWX	dst, src	Load Word using Extended Addressing
LDX	dst, src	Load using Extended Addressing
LEA	dst, X(src)	Load Effective Address
POP	dst	Pop
POPX	dst	Pop using Extended Addressing
PUSH	src	Push
PUSHX	src	Push using Extended Addressing

Table 110. Logical Instructions

Mnemonic	Operands	Instruction
AND	dst, src	Logical AND
ANDX	dst, src	Logical AND using Extended Addressing
COM	dst	Complement
OR	dst, src	Logical OR
ORX	dst, src	Logical OR using Extended Addressing
XOR	dst, src	Logical Exclusive OR
XORX	dst, src	Logical Exclusive OR using Extended Addressing

Table 111. Program Control Instructions

Mnemonic	Operands	Instruction
BRK	—	On-chip Debugger Break
BTJ	p, bit, src, DA	Bit Test and Jump
BTJNZ	bit, src, DA	Bit Test and Jump if Non-Zero
BTJZ	bit, src, DA	Bit Test and Jump if Zero
CALL	dst	Call Procedure
DJNZ	dst, src, RA	Decrement and Jump Non-Zero
IRET	—	Interrupt Return
JP	dst	Jump
JP cc	dst	Jump Conditional
JR	DA	Jump Relative
JR cc	DA	Jump Relative Conditional
RET	—	Return
TRAP	vector	Software Trap

Table 112. Rotate and Shift Instructions

Mnemonic	Operands	Instruction
BSWAP	dst	Bit Swap
RL	dst	Rotate Left
RLC	dst	Rotate Left through Carry

Table 112. Rotate and Shift Instructions (Continued)

Mnemonic	Operands	Instruction
RR	dst	Rotate Right
RRC	dst	Rotate Right through Carry
SRA	dst	Shift Right Arithmetic
SRL	dst	Shift Right Logical
SWAP	dst	Swap Nibbles

eZ8 CPU Instruction Summary

Table 113 summarizes the eZ8 CPU instructions. The table identifies the addressing modes employed by the instruction, the effect upon the Flags register, the number of CPU clock cycles required for the instruction fetch and the number of CPU clock cycles required for the instruction execution.

Table 113. eZ8 CPU Instruction Summary

Assembly Mnemonic	Symbolic Operation	Address Mode dst	Address Mode src	Op Code(s) (Hex)	Flags C	Flags Z	Flags S	Flags V	Flags D	Flags H	Fetch Cycles	Instr. Cycles
ADC dst, src	dst ← dst + src + C	r	r	12	*	*	*	*	0	*	2	3
		r	Ir	13							2	4
		R	R	14							3	3
		R	IR	15							3	4
		R	IM	16							3	3
		IR	IM	17							3	4
ADCX dst, src	dst ← dst + src + C	ER	ER	18	*	*	*	*	0	*	4	3
		ER	IM	19							4	3
ADD dst, src	dst ← dst + src	r	r	02	*	*	*	*	0	*	2	3
		r	Ir	03							2	4
		R	R	04							3	3
		R	IR	05							3	4
		R	IM	06							3	3
		IR	IM	07							3	4
ADDX dst, src	dst ← dst + src	ER	ER	08	*	*	*	*	0	*	4	3
		ER	IM	09							4	3

Note: Flags Notation:
* = Value is a function of the result of the operation.
– = Unaffected.
X = Undefined.
0 = Reset to 0.
1 = Set to 1.

Table 113. eZ8 CPU Instruction Summary (Continued)

Assembly Mnemonic	Symbolic Operation	Address Mode dst	Address Mode src	Op Code(s) (Hex)	Flags C	Flags Z	Flags S	Flags V	Flags D	Flags H	Fetch Cycles	Instr. Cycles
AND dst, src	dst ← dst AND src	r	r	52	–	*	*	0	–	–	2	3
		r	Ir	53							2	4
		R	R	54							3	3
		R	IR	55							3	4
		R	IM	56							3	3
		IR	IM	57							3	4
ANDX dst, src	dst ← dst AND src	ER	ER	58	–	*	*	0	–	–	4	3
		ER	IM	59							4	3
ATM	Block all interrupt and DMA requests during execution of the next 3 instructions			2F	–	–	–	–	–	–	1	2
BCLR bit, dst	dst[bit] ← 0	r		E2	–	*	*	0	–	–	2	2
BIT p, bit, dst	dst[bit] ← p	r		E2	–	*	*	0	–	–	2	2
BRK	Debugger Break			00	–	–	–	–	–	–	1	1
BSET bit, dst	dst[bit] ← 1	r		E2	–	*	*	0	–	–	2	2
BSWAP dst	dst[7:0] ← dst[0:7]	R		D5	X	*	*	0	–	–	2	2
BTJ p, bit, src, dst	if src[bit] = p PC ← PC + X		r	F6	–	–	–	–	–	–	3	3
			Ir	F7							3	4
BTJNZ bit, src, dst	if src[bit] = 1 PC ← PC + X		r	F6	–	–	–	–	–	–	3	3
			Ir	F7							3	4
BTJZ bit, src, dst	if src[bit] = 0 PC ← PC + X		r	F6	–	–	–	–	–	–	3	3
			Ir	F7							3	4
CALL dst	SP ← SP –2 @SP ← PC PC ← dst	IRR		D4	–	–	–	–	–	–	2	6
		DA		D6							3	3
CCF	C ← ~C			EF	*	–	–	–	–	–-	1	2

Note: Flags Notation:
* = Value is a function of the result of the operation.
– = Unaffected.
X = Undefined.
0 = Reset to 0.
1 = Set to 1.

Table 113. eZ8 CPU Instruction Summary (Continued)

Assembly Mnemonic	Symbolic Operation	Address Mode dst	Address Mode src	Op Code(s) (Hex)	Flags C	Flags Z	Flags S	Flags V	Flags D	Flags H	Fetch Cycles	Instr. Cycles
CLR dst	dst ← 00h	R		B0	–	–	–	–	–	–	2	2
		IR		B1							2	3
COM dst	dst ← ~dst	R		60	–	*	*	0	–	–	2	2
		IR		61							2	3
CP dst, src	dst - src	r	r	A2	*	*	*	*	–	–	2	3
		r	Ir	A3							2	4
		R	R	A4							3	3
		R	IR	A5							3	4
		R	IM	A6							3	3
		IR	IM	A7							3	4
CPC dst, src	dst - src - C	r	r	1F A2	*	*	*	*	–	–	3	3
		r	Ir	1F A3							3	4
		R	R	1F A4							4	3
		R	IR	1F A5							4	4
		R	IM	1F A6							4	3
		IR	IM	1F A7							4	4
CPCX dst, src	dst - src - C	ER	ER	1F A8	*	*	*	*	–	–	5	3
		ER	IM	1F A9							5	3
CPX dst, src	dst - src	ER	ER	A8	*	*	*	*	–	–	4	3
		ER	IM	A9							4	3
DA dst	dst ← DA(dst)	R		40	*	*	*	X	–	–	2	2
		IR		41							2	3
DEC dst	dst ← dst - 1	R		30	–	*	*	*	–	–	2	2
		IR		31							2	3
DECW dst	dst ← dst - 1	RR		80	–	*	*	*	–	–	2	5
		IRR		81							2	6
DI	IRQCTL[7] ← 0			8F	–	–	–	–	–	–	1	2

Note: Flags Notation:
* = Value is a function of the result of the operation.
– = Unaffected.
X = Undefined.
0 = Reset to 0.
1 = Set to 1.

Table 113. eZ8 CPU Instruction Summary (Continued)

Assembly Mnemonic	Symbolic Operation	Address Mode dst	Address Mode src	Op Code(s) (Hex)	Flags C	Flags Z	Flags S	Flags V	Flags D	Flags H	Fetch Cycles	Instr. Cycles
DJNZ dst, RA	dst ← dst – 1 if dst ≠ 0 PC ← PC + X	r		0A–FA	–	–	–	–	–	–	2	3
EI	IRQCTL[7] ← 1			9F	–	–	–	–	–	–	1	2
HALT	HALT Mode			7F	–	–	–	–	–	–	1	2
INC dst	dst ← dst + 1	R		20	–	*	*	–	–	–	2	2
		IR		21							2	3
		r		0E–FE							1	2
INCW dst	dst ← dst + 1	RR		A0	–	*	*	*	–	–	2	5
		IRR		A1							2	6
IRET	FLAGS ← @SP SP ← SP + 1 PC ← @SP SP ← SP + 2 IRQCTL[7] ← 1			BF	*	*	*	*	*	*	1	5
JP dst	PC ← dst	DA		8D	–	–	–	–	–	–	3	2
		IRR		C4							2	3
JP cc, dst	if cc is true PC ← dst	DA		0D–FD	–	–	–	–	–	–	3	2
JR dst	PC ← PC + X	DA		8B	–	–	–	–	–	–	2	2
JR cc, dst	if cc is true PC ← PC + X	DA		0B–FB	–	–	–	–	–	–	2	2

Note: Flags Notation:
* = Value is a function of the result of the operation.
– = Unaffected.
X = Undefined.
0 = Reset to 0.
1 = Set to 1.

Table 113. eZ8 CPU Instruction Summary (Continued)

Assembly Mnemonic	Symbolic Operation	Address Mode dst	Address Mode src	Op Code(s) (Hex)	Flags C	Flags Z	Flags S	Flags V	Flags D	Flags H	Fetch Cycles	Instr. Cycles
LD dst, rc	dst ← src	r	IM	0C–FC	–	–	–	–	–	–	2	2
		r	X(r)	C7							3	3
		X(r)	r	D7							3	4
		r	Ir	E3							2	3
		R	R	E4							3	2
		R	IR	E5							3	4
		R	IM	E6							3	2
		IR	IM	E7							3	3
		Ir	r	F3							2	3
		IR	R	F5							3	3
LDC dst, src	dst ← src	r	Irr	C2	–	–	–	–	–	–	2	5
		Ir	Irr	C5							2	9
		Irr	r	D2							2	5
LDCI dst, src	dst ← src r ← r + 1 rr ← rr + 1	Ir	Irr	C3	–	–	–	–	–	–	2	9
		Irr	Ir	D3							2	9
LDE dst, src	dst ← src	r	Irr	82	–	–	–	–	–	–	2	5
		Irr	r	92							2	5
LDEI dst, src	dst ← src r ← r + 1 rr ← rr + 1	Ir	Irr	83	–	–	–	–	–	–	2	9
		Irr	Ir	93							2	9
LDWX dst, src	dst ← src	ER	ER	1FE8	–	–	–	–	–	–	5	4

Note: Flags Notation:
* = Value is a function of the result of the operation.
– = Unaffected.
X = Undefined.
0 = Reset to 0.
1 = Set to 1.

Table 113. eZ8 CPU Instruction Summary (Continued)

Assembly Mnemonic	Symbolic Operation	Address Mode dst	Address Mode src	Op Code(s) (Hex)	Flags C	Flags Z	Flags S	Flags V	Flags D	Flags H	Fetch Cycles	Instr. Cycles
LDX dst, src	dst ← src	r	ER	84	–	–	–	–	–	–	3	2
		Ir	ER	85							3	3
		R	IRR	86							3	4
		IR	IRR	87							3	5
		r	X(rr)	88							3	4
		X(rr)	r	89							3	4
		ER	r	94							3	2
		ER	Ir	95							3	3
		IRR	R	96							3	4
		IRR	IR	97							3	5
		ER	ER	E8							4	2
		ER	IM	E9							4	2
LEA dst, X(src)	dst ← src + X	r	X(r)	98	–	–	–	–	–	–	3	3
		rr	X(rr)	99							3	5
MULT dst	dst[15:0] ← dst[15:8] * dst[7:0]	RR		F4	–	–	–	–	–	–	2	8
NOP	No operation			0F	–	–	–	–	–	–	1	2
OR dst, src	dst ← dst OR src	r	r	42	–	*	*	0	–	–	2	3
		r	Ir	43							2	4
		R	R	44							3	3
		R	IR	45							3	4
		R	IM	46							3	3
		IR	IM	47							3	4
ORX dst, src	dst ← dst OR src	ER	ER	48	–	*	*	0	–	–	4	3
		ER	IM	49							4	3
POP dst	dst ← @SP SP ← SP + 1	R		50	–	–	–	–	–	–	2	2
		IR		51							2	3

Note: Flags Notation:
* = Value is a function of the result of the operation.
– = Unaffected.
X = Undefined.
0 = Reset to 0.
1 = Set to 1.

Table 113. eZ8 CPU Instruction Summary (Continued)

Assembly Mnemonic	Symbolic Operation	Address Mode dst	Address Mode src	Op Code(s) (Hex)	Flags C	Flags Z	Flags S	Flags V	Flags D	Flags H	Fetch Cycles	Instr. Cycles
POPX dst	dst ← @SP SP ← SP + 1	ER		D8	–	–	–	–	–	–	3	2
PUSH src	SP ← SP – 1 @SP ← src	R		70	–	–	–	–	–	–	2	2
		IR		71							2	3
		IM		IF70							3	2
PUSHX src	SP ← SP – 1 @SP ← src	ER		C8	–	–	–	–	–	–	3	2
RCF	C ← 0			CF	0	–	–	–	–	–	1	2
RET	PC ← @SP SP ← SP + 2			AF	–	–	–	–	–	–	1	4
RL dst	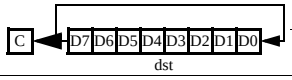	R		90	*	*	*	*	–	–	2	2
		IR		91							2	3
RLC dst	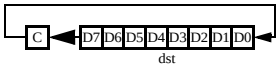	R		10	*	*	*	*	–	–	2	2
		IR		11							2	3
RR dst		R		E0	*	*	*	*	–	–	2	2
		IR		E1							2	3
RRC dst	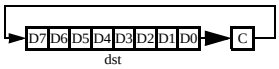	R		C0	*	*	*	*	–	–	2	2
		IR		C1							2	3
SBC dst, src	dst ← dst – src - C	r	r	32	*	*	*	*	1	*	2	3
		r	Ir	33							2	4
		R	R	34							3	3
		R	IR	35							3	4
		R	IM	36							3	3
		IR	IM	37							3	4
SBCX dst, src	dst ← dst – src - C	ER	ER	38	*	*	*	*	1	*	4	3
		ER	IM	39							4	3
SCF	C ← 1			DF	1	–	–	–	–	–	1	2

Note: Flags Notation:
* = Value is a function of the result of the operation.
– = Unaffected.
X = Undefined.
0 = Reset to 0.
1 = Set to 1.

Table 113. eZ8 CPU Instruction Summary (Continued)

Assembly Mnemonic	Symbolic Operation	Address Mode dst	Address Mode src	Op Code(s) (Hex)	Flags C	Flags Z	Flags S	Flags V	Flags D	Flags H	Fetch Cycles	Instr. Cycles
SRA dst	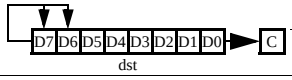	R		D0	*	*	*	0	–	–	2	2
		IR		D1							2	3
SRL dst	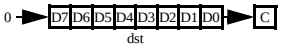	R		1F C0	*	*	0	*	–	–	3	2
		IR		1F C1							3	3
SRP src	RP ← src		IM	01	–	–	–	–	–	–	2	2
STOP	Stop Mode			6F	–	–	–	–	–	–	1	2
SUB dst, src	dst ← dst – src	r	r	22	*	*	*	*	1	*	2	3
		r	Ir	23							2	4
		R	R	24							3	3
		R	IR	25							3	4
		R	IM	26							3	3
		IR	IM	27							3	4
SUBX dst, src	dst ← dst – src	ER	ER	28	*	*	*	*	1	*	4	3
		ER	IM	29							4	3
SWAP dst	dst[7:4] ↔ dst[3:0]	R		F0	X	*	*	X	–	–	2	2
		IR		F1							2	3
TCM dst, src	(NOT dst) AND src	r	r	62	–	*	*	0	–	–	2	3
		r	Ir	63							2	4
		R	R	64							3	3
		R	IR	65							3	4
		R	IM	66							3	3
		IR	IM	67							3	4
TCMX dst, src	(NOT dst) AND src	ER	ER	68	–	*	*	0	–	–	4	3
		ER	IM	69							4	3

Note: Flags Notation:
* = Value is a function of the result of the operation.
– = Unaffected.
X = Undefined.
0 = Reset to 0.
1 = Set to 1.

Table 113. eZ8 CPU Instruction Summary (Continued)

Assembly Mnemonic	Symbolic Operation	Address Mode dst	Address Mode src	Op Code(s) (Hex)	Flags C	Flags Z	Flags S	Flags V	Flags D	Flags H	Fetch Cycles	Instr. Cycles
TM dst, src	dst AND src	r	r	72	–	*	*	0	–	–	2	3
		r	Ir	73							2	4
		R	R	74							3	3
		R	IR	75							3	4
		R	IM	76							3	3
		IR	IM	77							3	4
TMX dst, src	dst AND src	ER	ER	78	–	*	*	0	–	–	4	3
		ER	IM	79							4	3
TRAP Vector	SP ← SP – 2 @SP ← PC SP ← SP – 1 @SP ← FLAGS PC ← @Vector		Vec-tor	F2	–	–	–	–	–	–	2	6
WDT				5F	–	–	–	–	–	–	1	2
XOR dst, src	dst ← dst XOR src	r	r	B2	–	*	*	0	–	–	2	3
		r	Ir	B3							2	4
		R	R	B4							3	3
		R	IR	B5							3	4
		R	IM	B6							3	3
		IR	IM	B7							3	4
XORX dst, src	dst ← dst XOR src	ER	ER	B8	–	*	*	0	–	–	4	3
		ER	IM	B9							4	3

Note: Flags Notation:
* = Value is a function of the result of the operation.
– = Unaffected.
X = Undefined.
0 = Reset to 0.
1 = Set to 1.

Op Code Maps

A description of the opcode map data and the abbreviations are provided in Figure 28. Table 114 on page 181 lists opcode map abbreviations.

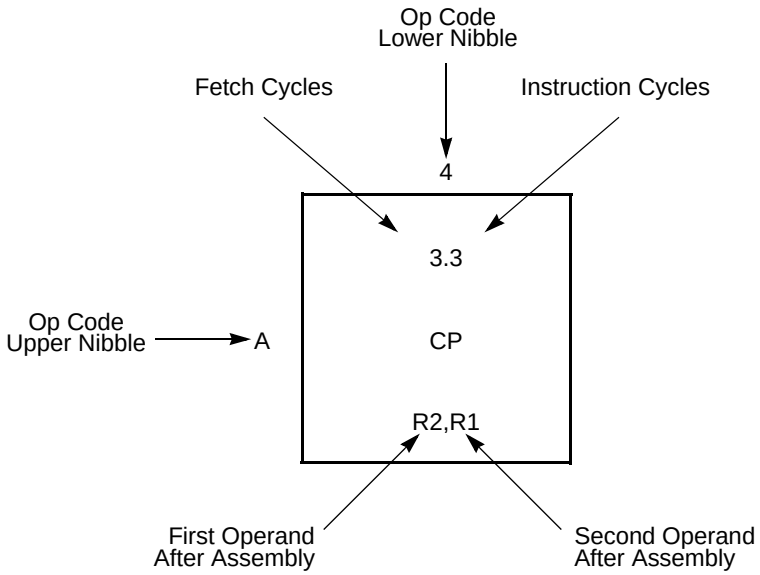

Figure 28. Op Code Map Cell Description

Table 114. Op Code Map Abbreviations

Abbreviation	Description	Abbreviation	Description
b	Bit position	IRR	Indirect Register Pair
cc	Condition code	p	Polarity (0 or 1)
X	8-bit signed index or displacement	r	4-bit Working Register
DA	Destination address	R	8-bit register
ER	Extended Addressing Register	r1, R1, Ir1, Irr1, IR1, rr1, RR1, IRR1, ER1	Destination address
IM	Immediate data value	r2, R2, Ir2, Irr2, IR2, rr2, RR2, IRR2, ER2	Source address
Ir	Indirect Working Register	RA	Relative
IR	Indirect Register	rr	Working Register Pair
Irr	Indirect Working Register Pair	RR	Register Pair

Figures 29 and 30 provide information about each of the eZ8 CPU instructions.

Upper Nibble (Hex) \ Lower Nibble (Hex)	0	1	2	3	4	5	6	7	8	9	A	B	C	D	E	F
0	1.1 **BRK**	2.2 **SRP** IM	2.3 **ADD** r1,r2	2.4 **ADD** r1,Ir2	3.3 **ADD** R2,R1	3.4 **ADD** IR2,R1	3.3 **ADD** R1,IM	3.4 **ADD** IR1,IM	4.3 **ADDX** ER2,ER1	4.3 **ADDX** IM,ER1	2.3 **DJNZ** r1,X	2.2 **JR** cc,X	2.2 **LD** r1,IM	3.2 **JP** cc,DA	1.2 **INC** r1	1.2 **NOP**
1	2.2 **RLC** R1	2.3 **RLC** IR1	2.3 **ADC** r1,r2	2.4 **ADC** r1,Ir2	3.3 **ADC** R2,R1	3.4 **ADC** IR2,R1	3.3 **ADC** R1,IM	3.4 **ADC** IR1,IM	4.3 **ADCX** ER2,ER1	4.3 **ADCX** IM,ER1						See 2nd Op Code Map
2	2.2 **INC** R1	2.3 **INC** IR1	2.3 **SUB** r1,r2	2.4 **SUB** r1,Ir2	3.3 **SUB** R2,R1	3.4 **SUB** IR2,R1	3.3 **SUB** R1,IM	3.4 **SUB** IR1,IM	4.3 **SUBX** ER2,ER1	4.3 **SUBX** IM,ER1						
3	2.2 **DEC** R1	2.3 **DEC** IR1	2.3 **SBC** r1,r2	2.4 **SBC** r1,Ir2	3.3 **SBC** R2,R1	3.4 **SBC** IR2,R1	3.3 **SBC** R1,IM	3.4 **SBC** IR1,IM	4.3 **SBCX** ER2,ER1	4.3 **SBCX** IM,ER1						
4	2.2 **DA** R1	2.3 **DA** IR1	2.3 **OR** r1,r2	2.4 **OR** r1,Ir2	3.3 **OR** R2,R1	3.4 **OR** IR2,R1	3.3 **OR** R1,IM	3.4 **OR** IR1,IM	4.3 **ORX** ER2,ER1	4.3 **ORX** IM,ER1						
5	2.2 **POP** R1	2.3 **POP** IR1	2.3 **AND** r1,r2	2.4 **AND** r1,Ir2	3.3 **AND** R2,R1	3.4 **AND** IR2,R1	3.3 **AND** R1,IM	3.4 **AND** IR1,IM	4.3 **ANDX** ER2,ER1	4.3 **ANDX** IM,ER1						1.2 **WDT**
6	2.2 **COM** R1	2.3 **COM** IR1	2.3 **TCM** r1,r2	2.4 **TCM** r1,Ir2	3.3 **TCM** R2,R1	3.4 **TCM** IR2,R1	3.3 **TCM** R1,IM	3.4 **TCM** IR1,IM	4.3 **TCMX** ER2,ER1	4.3 **TCMX** IM,ER1						1.2 **STOP**
7	2.2 **PUSH** R2	2.3 **PUSH** IR2	2.3 **TM** r1,r2	2.4 **TM** r1,Ir2	3.3 **TM** R2,R1	3.4 **TM** IR2,R1	3.3 **TM** R1,IM	3.4 **TM** IR1,IM	4.3 **TMX** ER2,ER1	4.3 **TMX** IM,ER1						1.2 **HALT**
8	2.5 **DECW** RR1	2.6 **DECW** IRR1	2.5 **LDE** r1,Irr2	2.9 **LDEI** Ir1,Irr2	3.2 **LDX** r1,ER2	3.3 **LDX** Ir1,ER2	3.4 **LDX** IRR2,R1	3.5 **LDX** IRR2,IR1	3.4 **LDX** r1,rr2,X	3.4 **LDX** rr1,r2,X						1.2 **DI**
9	2.2 **RL** R1	2.3 **RL** IR1	2.5 **LDE** r2,Irr1	2.9 **LDEI** Ir2,Irr1	3.2 **LDX** r2,ER1	3.3 **LDX** Ir2,ER1	3.4 **LDX** R2,IRR1	3.5 **LDX** IR2,IRR1	3.3 **LEA** r1,r2,X	3.5 **LEA** rr1,rr2,X						1.2 **EI**
A	2.5 **INCW** RR1	2.6 **INCW** IRR1	2.3 **CP** r1,r2	2.4 **CP** r1,Ir2	3.3 **CP** R2,R1	3.4 **CP** IR2,R1	3.3 **CP** R1,IM	3.4 **CP** IR1,IM	4.3 **CPX** ER2,ER1	4.3 **CPX** IM,ER1						1.4 **RET**
B	2.2 **CLR** R1	2.3 **CLR** IR1	2.3 **XOR** r1,r2	2.4 **XOR** r1,Ir2	3.3 **XOR** R2,R1	3.4 **XOR** IR2,R1	3.3 **XOR** R1,IM	3.4 **XOR** IR1,IM	4.3 **XORX** ER2,ER1	4.3 **XORX** IM,ER1						1.5 **IRET**
C	2.2 **RRC** R1	2.3 **RRC** IR1	2.5 **LDC** r1,Irr2	2.9 **LDCI** Ir1,Irr2	2.3 **JP** IRR1	2.9 **LDC** Ir1,Irr2		3.4 **LD** r1,r2,X	3.2 **PUSHX** ER2							1.2 **RCF**
D	2.2 **SRA** R1	2.3 **SRA** IR1	2.5 **LDC** r2,Irr1	2.9 **LDCI** Ir2,Irr1	2.6 **CALL** IRR1	2.2 **BSWAP** R1	3.3 **CALL** DA	3.4 **LD** r2,r1,X	3.2 **POPX** ER1							1.2 **SCF**
E	2.2 **RR** R1	2.3 **RR** IR1	2.2 **BIT** p,b,r1	2.3 **LD** r1,Ir2	3.2 **LD** R2,R1	3.3 **LD** IR2,R1	3.2 **LD** R1,IM	3.3 **LD** IR1,IM	4.2 **LDX** ER2,ER1	4.2 **LDX** IM,ER1						1.2 **CCF**
F	2.2 **SWAP** R1	2.3 **SWAP** IR1	2.6 **TRAP** Vector	2.3 **LD** Ir1,r2	2.8 **MULT** RR1	3.3 **LD** R2,IR1	3.3 **BTJ** p,b,r1,X	3.4 **BTJ** p,b,Ir1,X								

Figure 29. First Op Code Map

Upper Nibble (Hex) \ Lower Nibble (Hex)	0	1	2	3	4	5	6	7	8	9	A	B	C	D	E	F
0																
1																
2																
3																
4																
5																
6																
7	3.2 PUS															
8																
9																
A			3.3 **CPC** r1,r2	3.4 **CPC** r1,Ir2	4.3 **CPC** R2,R1	4.4 **CPC** IR2,R1	4.3 **CPC** R1,IM	4.4 **CPC** IR1,IM	5.3 **CPCX** ER2,ER1	5.3 **CPCX** IM,ER1						
B																
C	3.2 **SRL** R1	3.3 **SRL** IR1														
D																
E									5, 4 **LDWX** ER2,ER1							
F																

Figure 30. Second Op Code Map After 1Fh

Electrical Characteristics

The data in this chapter represents all known data prior to qualification and characterization of the F0830 Series of products, and is therefore subject to change. Additional electrical characteristics may be found in the individual chapters of this document.

Absolute Maximum Ratings

Stresses greater than those listed in Table 115 may cause permanent damage to the device. These ratings are stress ratings only. Operation of the device at any condition outside those indicated in the operational sections of these specifications is not implied. Exposure to absolute maximum rating conditions for extended periods may affect device reliability. For improved reliability, tie unused inputs to one of the supply voltages (V_{DD} or V_{SS}).

Table 115. Absolute Maximum Ratings

Parameter	Minimum	Maximum	Units	Notes
Ambient temperature under bias	–40	+105	°C	
Storage temperature	–65	+150	°C	
Voltage on any pin with respect to V_{SS}	–0.3	+5.5	V	
Voltage on V_{DD} pin with respect to V_{SS}	–0.3	+3.6	V	
Maximum current on input and/or inactive output pin	–5	+5	µA	
Maximum output current from active output pin	–25	+25	mA	
20-Pin Packages Maximum Ratings at 0°C to 70°C				
Total power dissipation		430	mW	
Maximum current into V_{DD} or out of V_{SS}		120	mA	
28-Pin Packages Maximum Ratings at 0°C to 70°C				
Total power dissipation		450	mW	
Maximum current into V_{DD} or out of V_{SS}		125	mA	

DC Characteristics

Table 116 lists the DC characteristics of the Z8 Encore! F0830 Series products. All voltages are referenced to V_{SS}, the primary system ground.

Table 116. DC Characteristics

		T_A = 0°C to +70°C			T_A = –40°C to +105°C				
Symbol	**Parameter**	**Min**	**Typ**	**Max**	**Min**	**Typ**	**Max**	**Units**	**Conditions**
V_{DD}	Supply Voltage				2.7	–	3.6	V	Power supply noise not to exceed 100mV peak to peak
V_{IL1}	Low Level Input Voltage				–0.3	–	0.3*V_{DD}	V	For all input pins except $\overline{RESET}$.
V_{IL2}	Low Level Input Voltage				–0.3	–	0.8	V	For $\overline{RESET}$.
V_{IH1}	High Level Input Voltage				2.0	–	5.5	V	For all input pins without analog or oscillator function.
V_{IH2}	High Level Input Voltage				2.0	–	V_{DD}+0.3	V	For those pins with analog or oscillator function.
V_{OL1}	Low Level Output Voltage				–	–	0.4	V	I_{OL} = 2mA; V_{DD} = 3.0V High Output Drive disabled.
V_{OH1}	High Level Output Voltage				2.4	–	–	V	I_{OH} = –2mA; V_{DD} = 3.0V High Output Drive disabled.
V_{OL2}	Low Level Output Voltage				–	–	0.6	V	I_{OL} = 20mA; V_{DD} = 3.3V High Output Drive enabled.
V_{OH2}	High Level Output Voltage				2.4	–	–	V	I_{OH} = –20mA; V_{DD} = 3.3V High Output Drive enabled.
I_{IL}	Input Leakage Current				–5	–	+5	µA	V_{DD} = 3.6V; V_{IN} = V_{DD} or V_{SS}[1]
I_{TL}	Tristate Leakage Current				–5	–	+5	µA	V_{DD} = 3.6V

Notes:
1. This condition excludes all pins that have on-chip pull-ups, when driven Low.
2. These values are provided for design guidance only and are not tested in production.
3. See Figure 31 for HALT Mode current.

Table 116. DC Characteristics (Continued)

		T_A = 0°C to +70°C			T_A = –40°C to +105°C				
Symbol	**Parameter**	**Min**	**Typ**	**Max**	**Min**	**Typ**	**Max**	**Units**	**Conditions**
I_{LED}	Controlled Current Drive				1.5	3	4.5	mA	See GPIO section on LED description
					2.8	7	10.5	mA	
					7.8	13	19.5	mA	
					12	20	30	mA	
C_{PAD}	GPIO Port Pad Capacitance				–	8.0[2]	–	pF	TBD
C_{XIN}	XIN Pad Capacitance				–	8.0[2]	–	pF	TBD
C_{XOUT}	XOUT Pad Capacitance				–	9.5[2]	–	pF	TBD
I_{PU}	Weak Pull-up Current				50	120	220	µA	V_{DD} = 2.7 - 3.6V
ICCH[3]	Supply Current in HALT Mode					TBD		mA	TBD
ICCS	Supply Current in Stop Mode			2			8	µA	Without Watchdog Timer running

Notes:
1. This condition excludes all pins that have on-chip pull-ups, when driven Low.
2. These values are provided for design guidance only and are not tested in production.
3. See Figure 31 for HALT Mode current.

Figure 31 displays the typical current consumption while operating at 25 ºC, 3.3 V, versus the system clock frequency in HALT Mode.

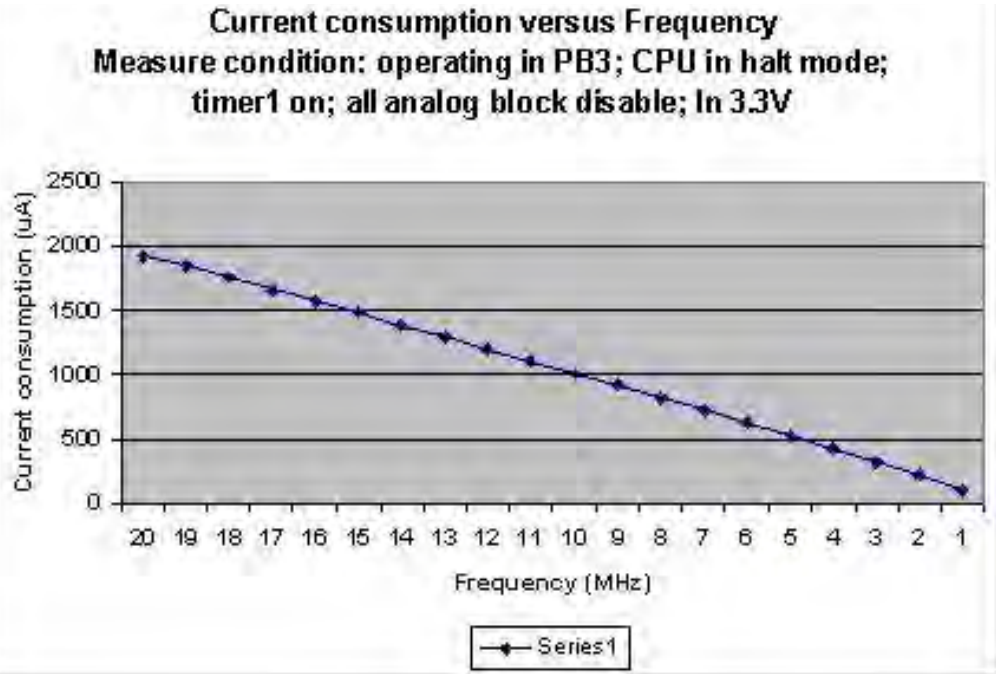

Figure 31. I_{CC} Versus System Clock Frequency (HALT Mode)

Figure 32 displays the typical current consumption versus the system clock frequency in Normal Mode.

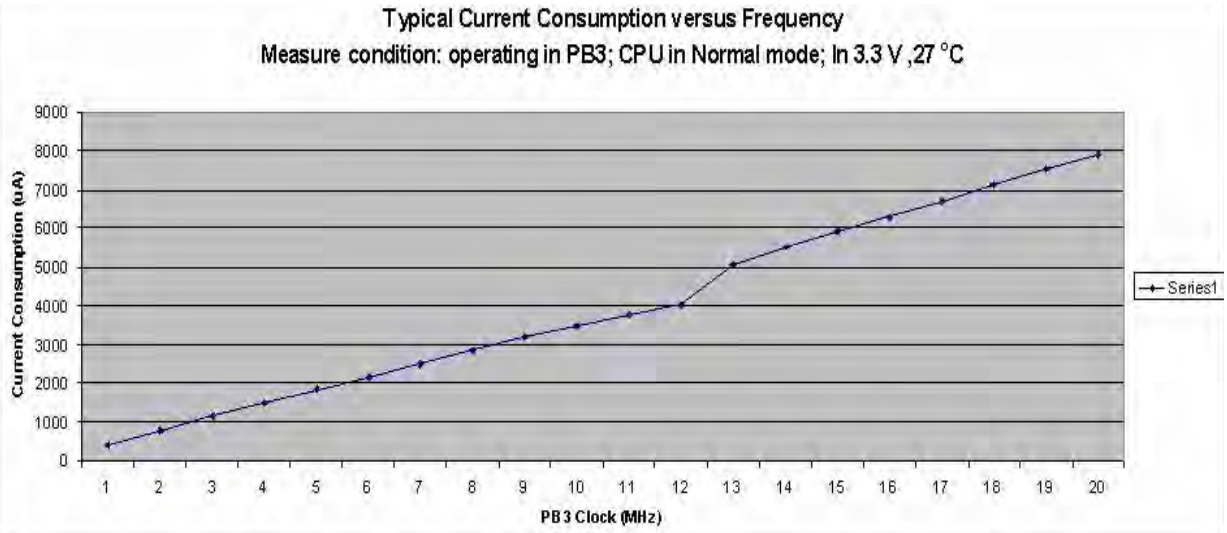

Figure 32. I_{CC} Versus System Clock Frequency (Normal Mode)

AC Characteristics

The section provides information about the AC characteristics and timing. All AC timing information assumes a standard load of 50pF on all outputs.

Table 117. AC Characteristics

		V_{DD} = 2.7 to 3.6V T_A = 0°C to +70°C		V_{DD} = 2.7 to 3.6V T_A = –40°C to +105°C			
Symbol	**Parameter**	**Min**	**Max**	**Min**	**Max**	**Units**	**Conditions**
F_{SYSCLK}	System Clock Frequency			–	20.0	MHz	Read-only from Flash memory
				0.032768	20.0	MHz	Program or erasure of the Flash memory
F_{XTAL}	Crystal Oscillator Frequency			1.0	20.0	MHz	System clock frequencies below the crystal oscillator minimum require an external
F_{IPO}	Internal Precision Oscillator Frequency			0.032768	5.5296	MHz	Oscillator is **not** adjustable over the entire range. User may select Min or Max value only.
F_{IPO}	Internal Precision Oscillator Frequency			5.31	5.75	MHz	High speed with trimming
F_{IPO}	Internal Precision Oscillator Frequency			4.15	6.91	MHz	High speed without trimming
F_{IPO}	Internal Precision Oscillator Frequency			30.7	33.3	KHz	Low speed with trimming
F_{IPO}	Internal Precision Oscillator Frequency			24	40	KHz	Low speed without trimming
T_{XIN}	System Clock Period			50	–	ns	$T_{CLK} = 1/F_{sysclk}$
T_{XINH}	System Clock High Time			20	30	ns	T_{CLK} = 50 ns
T_{XINL}	System Clock Low Time			20	30	ns	T_{CLK} = 50 ns

Table 117. AC Characteristics (Continued)

		V_{DD} = 2.7 to 3.6V T_A = 0°C to +70°C		V_{DD} = 2.7 to 3.6V T_A = –40°C to +105°C			
Symbol	**Parameter**	**Min**	**Max**	**Min**	**Max**	**Units**	**Conditions**
T_{XINR}	System Clock Rise Time			–	3	ns	T_{CLK} = 50 ns
T_{XINF}	System Clock Fall Time			–	3	ns	T_{CLK} = 50 ns
$T_{XTALSET}$	Crystal Oscillator Setup Time			–	30,000	cycle	Crystal oscillator cycles
T_{IPOSET}	Internal Precision Oscillator Startup Time			–	25	µs	Startup time after enable
T_{WDTSET}	WDT Startup Time			–	50	µs	Startup time after reset

On-Chip Peripheral AC and DC Electrical Characteristics

Table 118. Power-On Reset and Voltage Brown-Out Electrical Characteristics and Timing

		T_A = 0°C to +70°C			T_A = –40°C to +105°C				
Symbol	**Parameter**	**Min**	**Typ**	**Max**	**Min**	**Typ[1]**	**Max**	**Units**	**Conditions**
V_{POR}	Power-On Reset Voltage Threshold				2.20	2.45	2.70	V	$V_{DD} = V_{POR}$ (default VBO trim)
V_{VBO}	Voltage Brown-Out Reset Voltage Threshold				2.15	2.40	2.65	V	$V_{DD} = V_{VBO}$ (default VBO trim)
	V_{POR} to V_{VBO} hysteresis					50	75	mV	
	Starting V_{DD} voltage to ensure valid Power-On Reset.				–	V_{SS}	–	V	
T_{ANA}	Power-On Reset Analog Delay				–	50	–	µs	$V_{DD} > V_{POR}$; T_{POR} Digital Reset delay follows T_{ANA}

Note: [1]Data in the typical column is from characterization at 3.3V and 0°C. These values are provided for design guidance only and are not tested in production.

Table 118. Power-On Reset and Voltage Brown-Out Electrical Characteristics and Timing

		T_A = 0°C to +70°C			T_A = –40°C to +105°C				
Symbol	**Parameter**	**Min**	**Typ**	**Max**	**Min**	**Typ[1]**	**Max**	**Units**	**Conditions**
T_{POR}	Power-On Reset Digital Delay				TBD	13	TBD	µs	66 Internal Precision Oscillator cycles
T_{POR}	Power-On Reset Digital Delay				TBD	8	TBD	ms	5000 Internal Precision Oscillator cycles
T_{SMR}	Stop Mode Recovery with crystal oscillator disabled				TBD	13	TBD	µs	66 Internal Precision Oscillator cycles
T_{SMR}	Stop Mode Recovery with crystal oscillator enabled				TBD	8	TBD	ms	5000 Internal Precision Oscillator cycles
T_{VBO}	Voltage Brown-Out Pulse Rejection Period				–	10	–	µs	$V_{DD} < V_{VBO}$ to generate a Reset.
T_{RAMP}	Time for V_{DD} to transition from V_{SS} to V_{POR} to ensure valid Reset				0.10	–	100	ms	

Note: [1]Data in the typical column is from characterization at 3.3V and 0°C. These values are provided for design guidance only and are not tested in production.

Table 119. Flash Memory Electrical Characteristics and Timing

	V_{DD} = 2.7 to 3.6V T_A = 0°C to +70°C			V_{DD} = 2.7 to 3.6V T_A = –40°C to +105°C				
Parameter	**Min**	**Typ**	**Max**	**Min**	**Typ**	**Max**	**Units**	**Notes**
Flash Byte Read Time				50	–	–	ns	
Flash Byte Program Time				20	–	–	µs	
Flash Page Erase Time				50	–	–	ms	
Flash Mass Erase Time				50	–	–	ms	
Writes to Single Address Before Next Erase				–	–	2		
Flash Row Program Time				–	–	8	ms	Cumulative program time for single row cannot exceed limit before next erase. This parameter is only an issue when bypassing the Flash Controller.
Data Retention				10	–	–	years	25°C
Endurance				10,000	–	–	cycles	Program/erase cycles

Table 120. Watchdog Timer Electrical Characteristics and Timing

		V_{DD} = 2.7 to 3.6V T_A = 0°C to +70°C			V_{DD} = 2.7 - 3.6V T_A = –40°C to +105°C				
Symbol	**Parameter**	**Min**	**Typ**	**Max**	**Min**	**Typ**	**Max**	**Units**	**Conditions**
	Active power consumption					2	3	µA	
F_{WDT}	WDT oscillator frequency				2.5	5	7.5	kHz	

Table 121. Nonvolatile Data Storage

	V_{DD} = 2.7 to 3.6V T_A = 0°C to +70°C			V_{DD} = 2.7 to 3.6V T_A = –40°C to +105°C				
Parameter	**Min**	**Typ**	**Max**	**Min**	**Typ**	**Max**	**Units**	**Notes**
NVDS Byte Read Time				71	–	258	µs	With system clock at 20 MHz
NVDS Byte Program Time				126	–	136	µs	With system clock at 20 MHz
Data Retention				10	–	–	years	25°C
Endurance				100,000	–	–	cycles	Cumulative write cycles for entire memory

Note: For every 200 writes, a maintenance operation is necessary. In this rare occurrence, the write can take up to 58 ms to complete.

Table 122. Analog-to-Digital Converter Electrical Characteristics and Timing

		V_{DD} = 2.7 to 3.6V T_A = 0°C to +70°C			V_{DD} = 2.7 to 3.6V T_A = –40°C to +105°C				
Symbol	**Parameter**	**Min**	**Typ**	**Max**	**Min**	**Typ**	**Max**	**Units**	**Conditions**
	Resolution				–	10	–	bits	
	Differential Nonlinearity (DNL) [1]				–1	–	+4	LSB	
	Integral Nonlinearity (INL) [1]				–5	–	+5	LSB	
	Gain Error					15		LSB	
	Offset Error				–15	–	15	LSB	PDIP package
					–9	–	9	LSB	Other packages
V_{REF}	On chip reference				1.9	2.0	2.1	V	
	Active Power Consumption					4		mA	
	Power Down Current						1	µA	

Note: [1]When the input voltage is lower than 20 mV, the conversion error is out of spec.

Table 122. Analog-to-Digital Converter Electrical Characteristics and Timing (Continued)

		V_{DD} = 2.7 to 3.6V T_A = 0°C to +70°C			V_{DD} = 2.7 to 3.6V T_A = –40°C to +105°C				
Symbol	**Parameter**	**Min**	**Typ**	**Max**	**Min**	**Typ**	**Max**	**Units**	**Conditions**
Z_{IN}	Input Impedance				10			MΩ	
V_{IN}	Input Voltage Range				0		2.0	V	Internal reference
					0		0.9*VDD		External reference
	Conversion Time				11.9			µs	20MHz (ADC Clock)
	Input Bandwidth					500		KHz	
	Wake Up Time					0.02		ms	Internal reference
						10			External reference
	Input Clock Duty				45	50	55		
	Maximum Input Clock Frequency						20	MHz	

Note: [1]When the input voltage is lower than 20mV, the conversion error is out of spec.

Table 123. Comparator Electrical Characteristics

		V_{DD} = 2.7 to 3.6V T_A = 0°C to +70°C			V_{DD} = 2.7 to 3.6V T_A = –40°C to +105°C				
Symbol	**Parameter**	**Min**	**Typ**	**Max**	**Min**	**Typ**	**Max**	**Units**	**Conditions**
V_{OS}	Input DC Offset					5		mV	
V_{CREF}	Programmable Internal Reference Voltage Range				0		1.8	V	User-programmable in 200 mV step
V_{CREF}	Programmable internal reference voltage				0.92	1.0	1.08	V	Default (CMP0[REFLVL] =5h)
T_{PROP}	Propagation delay					100		ns	
V_{HYS}	Input hysteresis					8		mV	

General Purpose I/O Port Input Data Sample Timing

Figure 33 displays timing of the GPIO port input sampling. The input value on a GPIO port pin is sampled on the rising edge of the system clock. The port value is available to the eZ8 CPU on the second rising clock edge following the change of the port value.

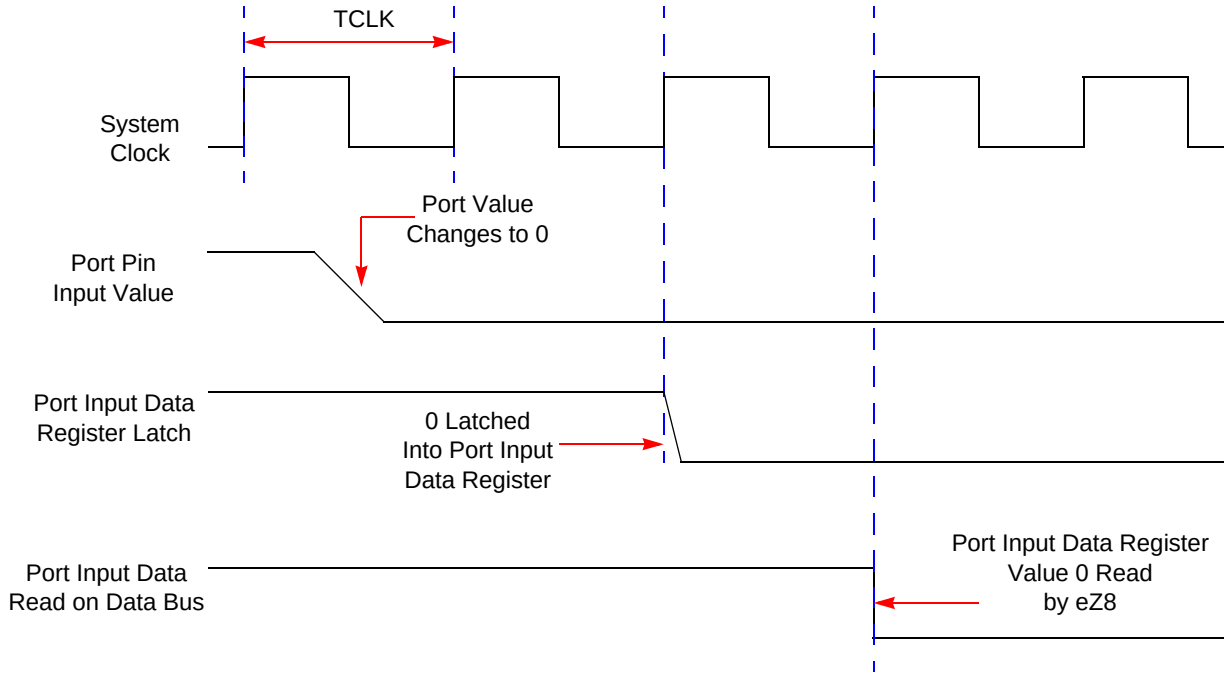

Figure 33. Port Input Sample Timing

Table 124. GPIO Port Input Timing

		Delay (ns)	
Parameter	**Abbreviation**	**Minimum**	**Maximum**
T_{S_PORT}	Port Input Transition to X_{IN} Rise Setup Time (not pictured)	5	–
T_{H_PORT}	X_{IN} Rise to Port Input Transition Hold Time (not pictured)	0	–
T_{SMR}	GPIO port pin pulse width to ensure Stop Mode Recovery (for GPIO port pins enabled as SMR sources)	1µs	

General Purpose I/O Port Output Timing

Figure 34 and Table 125 provide timing information for the GPIO port pins.

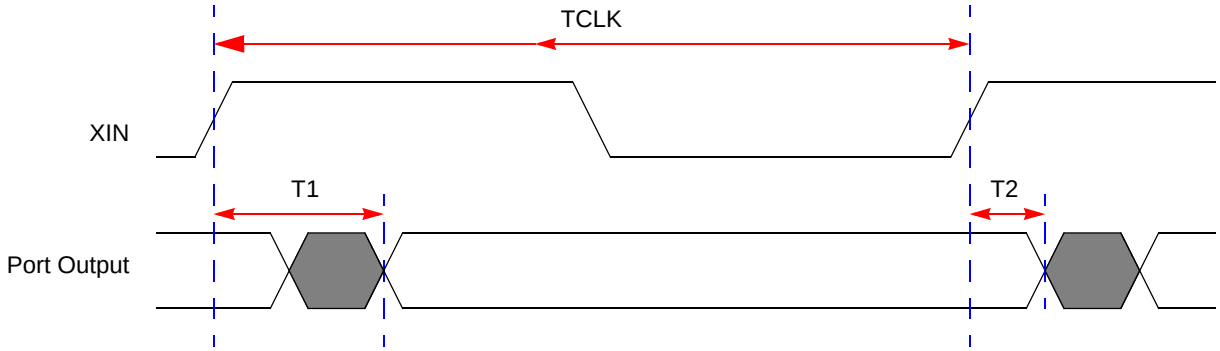

Figure 34. GPIO Port Output Timing

Table 125. GPIO Port Output Timing

		Delay (ns)	
Parameter	**Abbreviation**	**Minimum**	**Maximum**
GPIO Port Pins			
T_1	XIN Rise to Port Output Valid Delay	–	15
T_2	XIN Rise to Port Output Hold Time	2	–

On-Chip Debugger Timing

Figure 35 and Table 126 provide timing information for the DBG pin. The DBG pin timing specifications assume a 4 ns maximum rise and fall time.

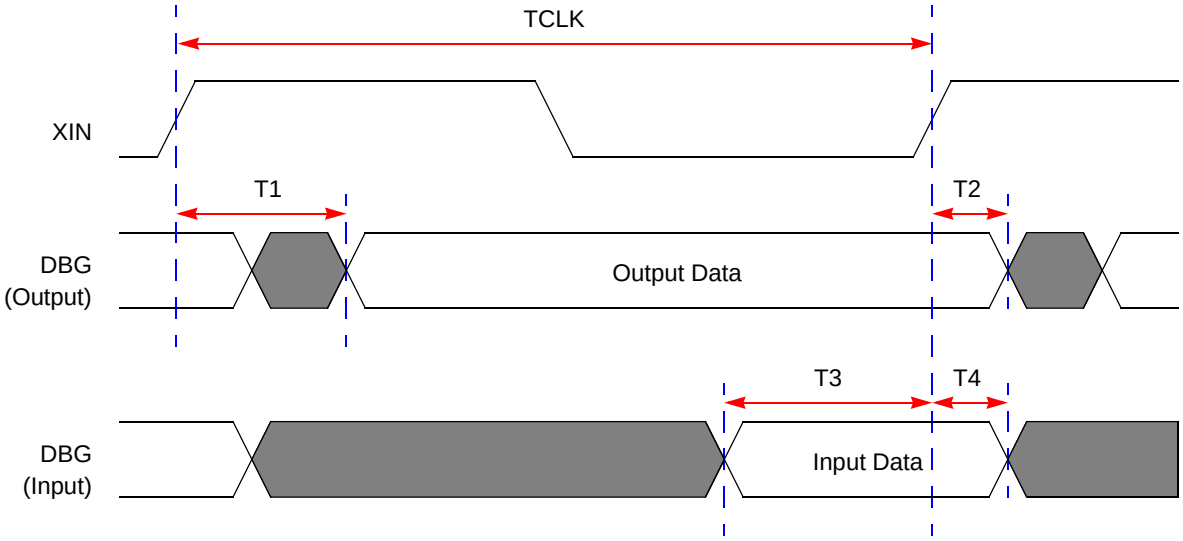

Figure 35. On-Chip Debugger Timing

Table 126. On-Chip Debugger Timing

		Delay (ns)	
Parameter	**Abbreviation**	**Minimum**	**Maximum**
DBG			
T_1	XIN Rise to DBG Valid Delay	–	15
T_2	XIN Rise to DBG Output Hold Time	2	–
T_3	DBG to XIN Rise Input Setup Time	5	–
T_4	DBG to XIN Rise Input Hold Time	5	–

Table 127. Power Consumption Reference Table

		Power Consumption	
Category	**Block**	**Typical**	**Maximum**
Logic	CPU/Peripherals @20MHz	5mA	
Flash	Flash @20MHz		12mA
Analog	ADC @20MHz	4mA	4.5mA
	IPO	350µA	400µA
	Comparator @10MHz	330µA	450µA
	POR & VBO	120µA	150µA
	WDT Oscillator	2µA	3µA
	OSC @20MHz	600µA	900µA
	Clock Filter	120µA	150µA

Note: The values in this table are subject to change after characterization.

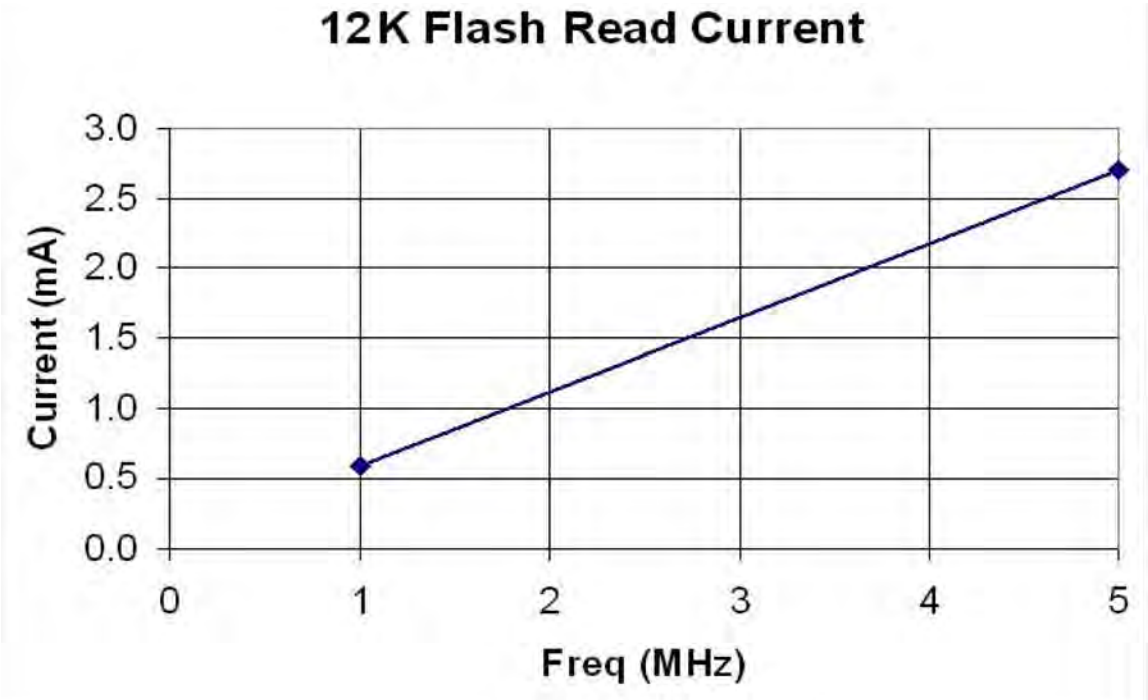

Figure 36. Flash Current Diagram

Packaging

Zilog's F0830 Series of MCUs includes the Z8F0130, Z8F0131, Z8F0230, Z8F0231, Z8F1232 and Z8F1233 devices, which are available in the following packages:

- 20-Pin Quad Flat No-Lead Package (QFN)
- 20-pin Small Outline Integrated Circuit Package (SOIC)
- 20-pin Plastic Dual-Inline Package (PDIP)
- 20-pin Small Shrink Outline Package (SSOP)
- 28-Pin Quad Flat No-Lead Package (QFN)
- 28-pin Small Outline Integrated Circuit Package (SOIC)
- 28-pin Plastic Dual-Inline Package (PDIP)
- 28-pin Small Shrink Outline Package (SSOP)

Current diagrams for each of these packages are published in Zilog's Packaging Product Specification (PS0072), which is available free for download from the Zilog website.

Ordering Information

Order your F0830 Series products from Zilog using the part numbers shown in Table 128. For more information about ordering, please consult your local Zilog sales office. The Sales Location page on the Zilog website lists all regional offices.

Table 128. Z8 Encore! XP F0830 Series Ordering Matrix

Part Number	Flash	RAM	NVDS	ADC Channels	Description
Z8 Encore! F0830 Series MCUs with 12KB Flash					
Standard Temperature: 0°C to 70°C					
Z8F1232SH020SG	12KB	256	No	7	SOIC 20-pin
Z8F1232HH020SG	12KB	256	No	7	SSOP 20-pin
Z8F1232PH020SG	12KB	256	No	7	PDIP 20-pin
Z8F1232QH020SG	12KB	256	No	7	QFN 20-pin
Z8F1233SH020SG	12KB	256	No	0	SOIC 20-pin
Z8F1233HH020SG	12KB	256	No	0	SSOP 20-pin
Z8F1233PH020SG	12KB	256	No	0	PDIP 20-pin
Z8F1233QH020SG	12KB	256	No	0	QFN 20-pin
Z8F1232SJ020SG	12KB	256	No	8	SOIC 28-pin
Z8F1232HJ020SG	12KB	256	No	8	SSOP 28-pin
Z8F1232PJ020SG	12KB	256	No	8	PDIP 28-pin
Z8F1232QJ020SG	12KB	256	No	8	QFN 28-pin
Z8F1233SJ020SG	12KB	256	No	0	SOIC 28-pin
Z8F1233HJ020SG	12KB	256	No	0	SSOP 28-pin
Z8F1233PJ020SG	12KB	256	No	0	PDIP 28-pin
Z8F1233QJ020SG	12KB	256	No	0	QFN 28-pin
Extended Temperature: –40°C to 105°C					
Z8F1232SH020EG	12KB	256	No	7	SOIC 20-pin
Z8F1232HH020EG	12KB	256	No	7	SSOP 20-pin
Z8F1232PH020EG	12KB	256	No	7	PDIP 20-pin
Z8F1232QH020EG	12KB	256	No	7	QFN 20-pin
Z8F1233SH020EG	12KB	256	No	0	SOIC 20-pin
Z8F1233HH020EG	12KB	256	No	0	SSOP 20-pin
Z8F1233PH020EG	12KB	256	No	0	PDIP 20-pin

Table 128. Z8 Encore! XP F0830 Series Ordering Matrix

Part Number	Flash	RAM	NVDS	ADC Channels	Description
Z8F1233QH020EG	12KB	256	No	0	QFN 20-pin
Z8F1232SJ020EG	12KB	256	No	8	SOIC 28-pin
Z8F1232HJ020EG	12KB	256	No	8	SSOP 28-pin
Z8F1232PJ020EG	12KB	256	No	8	PDIP 28-pin
Z8F1232QJ020EG	12KB	256	No	8	QFN 28-pin
Z8F1233SJ020EG	12KB	256	No	0	SOIC 28-pin
Z8F1233HJ020EG	12KB	256	No	0	SSOP 28-pin
Z8F1233PJ020EG	12KB	256	No	0	PDIP 28-pin
Z8F1233QJ020EG	12KB	256	No	0	QFN 28-pin
Z8 Encore! F0830 with 8KB Flash					
Standard Temperature: 0°C to 70°C					
Z8F0830SH020SG	8KB	256	Yes	7	SOIC 20-pin
Z8F0830HH020SG	8KB	256	Yes	7	SSOP 20-pin
Z8F0830PH020SG	8KB	256	Yes	7	PDIP 20-pin
Z8F0830QH020SG	8KB	256	Yes	7	QFN 20-pin
Z8F0831SH020SG	8KB	256	Yes	0	SOIC 20-pin
Z8F0831HH020SG	8KB	256	Yes	0	SSOP 20-pin
Z8F0831PH020SG	8KB	256	Yes	0	PDIP 20-pin
Z8F0831QH020SG	8KB	256	Yes	0	QFN 20-pin
Z8F0830SJ020SG	8KB	256	Yes	8	SOIC 28-pin
Z8F0830HJ020SG	8KB	256	Yes	8	SSOP 28-pin
Z8F0830PJ020SG	8KB	256	Yes	8	PDIP 28-pin
Z8F0830QJ020SG	8KB	256	Yes	8	QFN 28-pin
Z8F0831SJ020SG	8KB	256	Yes	0	SOIC 28-pin
Z8F0831HJ020SG	8KB	256	Yes	0	SSOP 28-pin
Z8F0831PJ020SG	8KB	256	Yes	0	PDIP 28-pin
Z8F0831QJ020SG	8KB	256	Yes	0	QFN 28-pin
Extended Temperature: –40°C to 105°C					
Z8F0830SH020EG	8KB	256	Yes	7	SOIC 20-pin
Z8F0830HH020EG	8KB	256	Yes	7	SSOP 20-pin
Z8F0830PH020EG	8KB	256	Yes	7	PDIP 20-pin
Z8F0830QH020EG	8KB	256	Yes	7	QFN 20-pin
Z8F0831SH020EG	8KB	256	Yes	0	SOIC 20-pin

Table 128. Z8 Encore! XP F0830 Series Ordering Matrix

Part Number	Flash	RAM	NVDS	ADC Channels	Description
Z8F0831HH020EG	8KB	256	Yes	0	SSOP 20-pin
Z8F0831PH020EG	8KB	256	Yes	0	PDIP 20-pin
Z8F0831QH020EG	8KB	256	Yes	0	QFN 20-pin
Z8F0830SJ020EG	8KB	256	Yes	8	SOIC 28-pin
Z8F0830HJ020EG	8KB	256	Yes	8	SSOP 28-pin
Z8F0830PJ020EG	8KB	256	Yes	8	PDIP 28-pin
Z8F0830QJ020EG	8KB	256	Yes	8	QFN 28-pin
Z8F0831SJ020EG	8KB	256	Yes	0	SOIC 28-pin
Z8F0831HJ020EG	8KB	256	Yes	0	SSOP 28-pin
Z8F0831PJ020EG	8KB	256	Yes	0	PDIP 28-pin
Z8F0831QJ020EG	8KB	256	Yes	0	QFN 28-pin
Z8 Encore! F0830 with 4KB Flash					
Standard Temperature: 0°C to 70°C					
Z8F0430SH020SG	4KB	256	Yes	7	SOIC 20-pin
Z8F0430HH020SG	4KB	256	Yes	7	SSOP 20-pin
Z8F0430PH020SG	4KB	256	Yes	7	PDIP 20-pin
Z8F0430QH020SG	4KB	256	Yes	7	QFN 20-pin
Z8F0431SH020SG	4KB	256	Yes	0	SOIC 20-pin
Z8F0431HH020SG	4KB	256	Yes	0	SSOP 20-pin
Z8F0431PH020SG	4KB	256	Yes	0	PDIP 20-pin
Z8F0431QH020SG	4KB	256	Yes	0	QFN 20-pin
Z8F0430SJ020SG	4KB	256	Yes	8	SOIC 28-pin
Z8F0430HJ020SG	4KB	256	Yes	8	SSOP 28-pin
Z8F0430PJ020SG	4KB	256	Yes	8	PDIP 28-pin
Z8F0430QJ020SG	4KB	256	Yes	8	QFN 28-pin
Z8F0431SJ020SG	4KB	256	Yes	0	SOIC 28-pin
Z8F0431HJ020SG	4KB	256	Yes	0	SSOP 28-pin
Z8F0431PJ020SG	4KB	256	Yes	0	PDIP 28-pin
Z8F0431QJ020SG	4KB	256	Yes	0	QFN 28-pin
Extended Temperature: –40°C to 105°C					
Z8F0430SH020EG	4KB	256	Yes	7	SOIC 20-pin
Z8F0430HH020EG	4KB	256	Yes	7	SSOP 20-pin
Z8F0430PH020EG	4KB	256	Yes	7	PDIP 20-pin

Table 128. Z8 Encore! XP F0830 Series Ordering Matrix

Part Number	Flash	RAM	NVDS	ADC Channels	Description
Z8F0430QH020EG	4KB	256	Yes	7	QFN 20-pin
Z8F0431SH020EG	4KB	256	Yes	0	SOIC 20-pin
Z8F0431HH020EG	4KB	256	Yes	0	SSOP 20-pin
Z8F0431PH020EG	4KB	256	Yes	0	PDIP 20-pin
Z8F0431QH020EG	4KB	256	Yes	0	QFN 20-pin
Z8F0430SJ020EG	4KB	256	Yes	8	SOIC 28-pin
Z8F0430HJ020EG	4KB	256	Yes	8	SSOP 28-pin
Z8F0430PJ020EG	4KB	256	Yes	8	PDIP 28-pin
Z8F0430QJ020EG	4KB	256	Yes	8	QFN 28-pin
Z8F0431SJ020EG	4KB	256	Yes	0	SOIC 28-pin
Z8F0431HJ020EG	4KB	256	Yes	0	SSOP 28-pin
Z8F0431PJ020EG	4KB	256	Yes	0	PDIP 28-pin
Z8F0431QJ020EG	4KB	256	Yes	0	QFN 28-pin
Z8 Encore! F0830 with 2KB Flash					
Standard Temperature: 0°C to 70°C					
Z8F0230SH020SG	2KB	256	Yes	7	SOIC 20-pin
Z8F0230HH020SG	2KB	256	Yes	7	SSOP 20-pin
Z8F0230PH020SG	2KB	256	Yes	7	PDIP 20-pin
Z8F0230QH020SG	2KB	256	Yes	7	QFN 20-pin
Z8F0231SH020SG	2KB	256	Yes	0	SOIC 20-pin
Z8F0231HH020SG	2KB	256	Yes	0	SSOP 20-pin
Z8F0231PH020SG	2KB	256	Yes	0	PDIP 20-pin
Z8F0231QH020SG	2KB	256	Yes	0	QFN 20-pin
Z8F0230SJ020SG	2KB	256	Yes	8	SOIC 28-pin
Z8F0230HJ020SG	2KB	256	Yes	8	SSOP 28-pin
Z8F0230PJ020SG	2KB	256	Yes	8	PDIP 28-pin
Z8F0230QJ020SG	2KB	256	Yes	8	QFN 28-pin
Z8F0231SJ020SG	2KB	256	Yes	0	SOIC 28-pin
Z8F0231HJ020SG	2KB	256	Yes	0	SSOP 28-pin
Z8F0231PJ020SG	2KB	256	Yes	0	PDIP 28-pin
Z8F0231QJ020SG	2KB	256	Yes	0	QFN 28-pin

Table 128. Z8 Encore! XP F0830 Series Ordering Matrix

Part Number	Flash	RAM	NVDS	ADC Channels	Description
Extended Temperature: –40°C to 105°C					
Z8F0230SH020EG	2KB	256	Yes	7	SOIC 20-pin
Z8F0230HH020EG	2KB	256	Yes	7	SSOP 20-pin
Z8F0230PH020EG	2KB	256	Yes	7	PDIP 20-pin
Z8F0230QH020EG	2KB	256	Yes	7	QFN 20-pin
Z8F0231SH020EG	2KB	256	Yes	0	SOIC 20-pin
Z8F0231HH020EG	2KB	256	Yes	0	SSOP 20-pin
Z8F0231PH020EG	2KB	256	Yes	0	PDIP 20-pin
Z8F0231QH020EG	2KB	256	Yes	0	QFN 20-pin
Z8F0230SJ020EG	2KB	256	Yes	8	SOIC 28-pin
Z8F0230HJ020EG	2KB	256	Yes	8	SSOP 28-pin
Z8F0230PJ020EG	2KB	256	Yes	8	PDIP 28-pin
Z8F0230QJ020EG	2KB	256	Yes	8	QFN 28-pin
Z8F0231SJ020EG	2KB	256	Yes	0	SOIC 28-pin
Z8F0231HJ020EG	2KB	256	Yes	0	SSOP 28-pin
Z8F0231PJ020EG	2KB	256	Yes	0	PDIP 28-pin
Z8F0231QJ020EG	2KB	256	Yes	0	QFN 28-pin
Z8 Encore! F0830 with 1KB Flash					
Standard Temperature: 0°C to 70°C					
Z8F0130SH020SG	1KB	256	Yes	7	SOIC 20-pin
Z8F0130HH020SG	1KB	256	Yes	7	SSOP 20-pin
Z8F0130PH020SG	1KB	256	Yes	7	PDIP 20-pin
Z8F0130QH020SG	1KB	256	Yes	7	QFN 20-pin
Z8F0131SH020SG	1KB	256	Yes	0	SOIC 20-pin
Z8F0131HH020SG	1KB	256	Yes	0	SSOP 20-pin
Z8F0131PH020SG	1KB	256	Yes	0	PDIP 20-pin
Z8F0131QH020SG	1KB	256	Yes	0	QFN 20-pin
Z8F0130SJ020SG	1KB	256	Yes	8	SOIC 28-pin
Z8F0130HJ020SG	1KB	256	Yes	8	SSOP 28-pin
Z8F0130PJ020SG	1KB	256	Yes	8	PDIP 28-pin
Z8F0130QJ020SG	1KB	256	Yes	8	QFN 28-pin
Z8F0131SJ020SG	1KB	256	Yes	0	SOIC 28-pin
Z8F0131HJ020SG	1KB	256	Yes	0	SSOP 28-pin

Table 128. Z8 Encore! XP F0830 Series Ordering Matrix

Part Number	Flash	RAM	NVDS	ADC Channels	Description
Z8F0131PJ020SG	1KB	256	Yes	0	PDIP 28-pin
Z8F0131QJ020SG	1KB	256	Yes	0	QFN 28-pin
Extended Temperature: –40°C to 105°C					
Z8F0130SH020EG	1KB	256	Yes	7	SOIC 20-pin
Z8F0130HH020EG	1KB	256	Yes	7	SSOP 20-pin
Z8F0130PH020EG	1KB	256	Yes	7	PDIP 20-pin
Z8F0130QH020EG	1KB	256	Yes	7	QFN 20-pin
Z8F0131SH020EG	1KB	256	Yes	0	SOIC 20-pin
Z8F0131HH020EG	1KB	256	Yes	0	SSOP 20-pin
Z8F0131PH020EG	1KB	256	Yes	0	PDIP 20-pin
Z8F0131QH020EG	1KB	256	Yes	0	QFN 20-pin
Z8F0130SJ020EG	1KB	256	Yes	8	SOIC 28-pin
Z8F0130HJ020EG	1KB	256	Yes	8	SSOP 28-pin
Z8F0130PJ020EG	1KB	256	Yes	8	PDIP 28-pin
Z8F0130QJ020EG	1KB	256	Yes	8	QFN 28-pin
Z8F0131SJ020EG	1KB	256	Yes	0	SOIC 28-pin
Z8F0131HJ020EG	1KB	256	Yes	0	SSOP 28-pin
Z8F0131PJ020EG	1KB	256	Yes	0	PDIP 28-pin
Z8F0131QJ020EG	1KB	256	Yes	0	QFN 28-pin
ZUSBSC00100ZACG					USB Smart Cable Accessory Kit
ZUSBOPTSC01ZACG					Opto-Isolated USB Smart Cable Accessory Kit

Part Number Suffix Designations

Zilog part numbers consist of a number of components, as indicated in the following example.

Example. Part number Z8F0830SH020SG is an 8-bit 20MHz Flash MCU with 8KB Program Memory and equipped with ADC and NVDS in a 20-pin SOIC package, operating within a 0ºC to +70ºC temperature range and built using lead-free solder.

Z8 F 08 30 S H 020 S G

Environmental Flow
G = Green Plastic Packaging Compound

Temperature Range
S = Standard, 0°C to 70°C
E = Extended, –40°C to +105°C

Speed
020 = 20 MHz

Pin Count*
H = 20
J = 28

Package*
P = PDIP
Q = QFN
S = SOIC
H = SSOP

Device Type
30 = Equipped with ADC and with NVDS.
31 = Equipped without ADC and with NVDS.
32 = Equipped with ADC and without NVDS (12 K version only).
33 = Equipped without ADC and without NVDS (12 K version only).

Memory Size
12 = 12 KB Flash
08 = 8 KB Flash
04 = 4 KB Flash
02 = 2 KB Flash
01 = 1 KB Flash

Memory Type
F = Flash

Device Family
Z8 = Zilog's 8-bit microcontroller

Table 129 lists the pin count by package.

Table 129. Package and Pin Count Description

	Pin Count	
Package	**20**	**28**
PDIP	√	√
QFN	√	√
SOIC	√	√
SSOP	√	√

Appendix A. Register Tables

For the reader's convenience, this appendix lists all F0830 Series registers numerically by hexadecimal address.

General Purpose RAM

In the F0830 Series, the `000-EFF` hexadecimal address range is partitioned for general-purpose random access memory, as follows.

Hex Addresses: 000–0FF

This address range is reserved for general-purpose register file RAM. For more details, see the Register File section on page 14.

Hex Addresses: 100–EFF

This address range is reserved.

Timer 0

For more information about these Timer Control registers, see the Timer Control Register Definitions section on page 83.

Hex Address: F00

Table 130. Timer 0 High Byte Register (T0H)

Bit	7	6	5	4	3	2	1	0
Field	TH							
RESET	0	0	0	0	0	0	0	0
R/W	R/W	R/W	R/W	R/W	R/W	R/W	R/W	R/W
Address	F00h							

Hex Address: F01

Table 131. Timer 0 Low Byte Register (T0L)

Bit	7	6	5	4	3	2	1	0
Field	TL							
RESET	0	0	0	0	0	0	0	1
R/W	R/W	R/W	R/W	R/W	R/W	R/W	R/W	R/W
Address	F01h							

Hex Address: F02

Table 132. Timer 0 Reload High Byte Register (T0RH)

Bit	7	6	5	4	3	2	1	0
Field	TRH							
RESET	1	1	1	1	1	1	1	1
R/W	R/W	R/W	R/W	R/W	R/W	R/W	R/W	R/W
Address	F02h							

Hex Address: F03

Table 133. Timer 0 Reload Low Byte Register (T0RL)

Bit	7	6	5	4	3	2	1	0
Field	TRL							
RESET	1	1	1	1	1	1	1	1
R/W	R/W	R/W	R/W	R/W	R/W	R/W	R/W	R/W
Address	F03h							

Hex Address: F04

Table 134. Timer 0 PWM High Byte Register (T0PWMH)

Bit	7	6	5	4	3	2	1	0
Field	PWMH							
RESET	0	0	0	0	0	0	0	0
R/W	R/W	R/W	R/W	R/W	R/W	R/W	R/W	R/W
Address	F04h							

Hex Address: F05

Table 135. Timer 0 PWM Low Byte Register (T0PWML)

Bit	7	6	5	4	3	2	1	0
Field	PWML							
RESET	0	0	0	0	0	0	0	0
R/W	R/W	R/W	R/W	R/W	R/W	R/W	R/W	R/W
Address	F05h							

Hex Address: F06

Table 136. Timer 0 Control Register 0 (T0CTL0)

Bit	7	6	5	4	3	2	1	0
Field	TMODEHI	TICONFIG		Reserved	PWMD			INPCAP
RESET	0	0	0	0	0	0	0	0
R/W	R/W	R/W	R/W	R/W	R/W	R/W	R/W	R/W
Address	F06h							

Hex Address: F07

Table 137. Timer 0 Control Register 1 (T0CTL1)

Bit	7	6	5	4	3	2	1	0
Field	TEN	TPOL	PRES			TMODE		
RESET	0	0	0	0	0	0	0	0
R/W	R/W	R/W	R/W	R/W	R/W	R/W	R/W	R/W
Address	F07h							

Hex Address: F08

Table 138. Timer 1 High Byte Register (T1H)

Bit	7	6	5	4	3	2	1	0
Field	TH							
RESET	0	0	0	0	0	0	0	0
R/W	R/W	R/W	R/W	R/W	R/W	R/W	R/W	R/W
Address	F08h							

Hex Address: F09

Table 139. Timer 1 Low Byte Register (T1L)

Bit	7	6	5	4	3	2	1	0
Field	TL							
RESET	0	0	0	0	0	0	0	1
R/W	R/W	R/W	R/W	R/W	R/W	R/W	R/W	R/W
Address	F09h							

Hex Address: F0A

Table 140. Timer 1 Reload High Byte Register (T1RH)

Bit	7	6	5	4	3	2	1	0
Field	TRH							
RESET	1	1	1	1	1	1	1	1
R/W	R/W	R/W	R/W	R/W	R/W	R/W	R/W	R/W
Address	F0Ah							

Hex Address: F0B

Table 141. Timer 1 Reload Low Byte Register (T1RL)

Bit	7	6	5	4	3	2	1	0
Field	TRL							
RESET	1	1	1	1	1	1	1	1
R/W	R/W	R/W	R/W	R/W	R/W	R/W	R/W	R/W
Address	F0Bh							

Hex Address: F0C

Table 142. Timer 1 PWM High Byte Register (T1PWMH)

Bit	7	6	5	4	3	2	1	0
Field	PWMH							
RESET	0	0	0	0	0	0	0	0
R/W	R/W	R/W	R/W	R/W	R/W	R/W	R/W	R/W
Address	F0Ch							

Hex Address: F0D

Table 143. Timer 1 PWM Low Byte Register (T1PWML)

Bit	7	6	5	4	3	2	1	0
Field	PWML							
RESET	0	0	0	0	0	0	0	0
R/W	R/W	R/W	R/W	R/W	R/W	R/W	R/W	R/W
Address	F0Dh							

Hex Address: F0E

Table 144. Timer 1 Control Register 0 (T1CTL0)

Bit	7	6	5	4	3	2	1	0
Field	TMODEHI	TICONFIG		Reserved	PWMD			INPCAP
RESET	0	0	0	0	0	0	0	0
R/W	R/W	R/W	R/W	R/W	R/W	R/W	R/W	R/W
Address	F0Eh							

Hex Address: F0F

Table 145. Timer 1 Control Register 1 (T1CTL1)

Bit	7	6	5	4	3	2	1	0
Field	TEN	TPOL	PRES			TMODE		
RESET	0	0	0	0	0	0	0	0
R/W	R/W	R/W	R/W	R/W	R/W	R/W	R/W	R/W
Address	F0Fh							

Hex Addresses: F10–F6F

This address range is reserved.

Analog-to-Digital Converter

For more information about these ADC registers, see the ADC Control Register Definitions section on page 101.

Hex Address: F70

Table 146. ADC Control Register 0 (ADCCTL0)

Bit	7	6	5	4	3	2	1	0
Field	START	Reserved	REFEN	ADCEN	Reserved	ANAIN[2:0]		
RESET	0	0	0	0	0	0	0	0
R/W	R/W1	R/W	R/W	R/W	R/W	R/W	R/W	R/W
Address	F70h							

Bit	Description
[7] START	**ADC Start/Busy** 0 = Writing to 0 has no effect; reading a 0 indicates that the ADC is available to begin a conversion. 1 = Writing to 1 starts a conversion; reading a 1 indicates that a conversion is currently in progress.
[6]	This bit is reserved and must be programmed to 0.
[5] REFEN	**Reference Enable** 0 = Internal reference voltage is disabled allowing an external reference voltage to be used by the ADC. 1 = Internal reference voltage for the ADC is enabled. The internal reference voltage can be measured on the V_{REF} pin.
[4] ADCEN	**ADC Enable** 0 = ADC is disabled for low power operation. 1 = ADC is enabled for normal use.
[3]	This bit is reserved and must be programmed to 0.
[2:0] ANAIN	**Analog Input Select** 000 = ANA0 input is selected for analog to digital conversion. 001 = ANA1 input is selected for analog to digital conversion. 010 = ANA2 input is selected for analog to digital conversion. 011 = ANA3 input is selected for analog to digital conversion. 100 = ANA4 input is selected for analog to digital conversion. 101 = ANA5 input is selected for analog to digital conversion. 110 = ANA6 input is selected for analog to digital conversion. 111 = ANA7 input is selected for analog to digital conversion.

Hex Address: F71

This address range is reserved.

Hex Address: F72

Table 147. ADC Data High Byte Register (ADCD_H)

Bit	7	6	5	4	3	2	1	0
Field	ADCDh							
RESET	X							
R/W	R							
Address	F72h							

Bit	Description
[7:0]	**ADC High Byte** 00h–FFh = The last conversion output is held in the data registers until the next ADC conversion is completed.

Hex Address: F73

Table 148. ADC Data Low Bits Register (ADCD_L)

Bit	7	6	5	4	3	2	1	0
Field	ADCDL		Reserved					
RESET	X		X					
R/W	R		R					
Address	F73h							

Bit Position	Description
[7:6]	**ADC Low Bits** 00–11b = These bits are the two least significant bits of the 10-bit ADC output. These bits are undefined after a reset. The low bits are latched into this register whenever the ADC Data High Byte Register is read.
[5:0]	**Reserved** These bits are reserved and must be programmed to 000000.

Hex Address: F74

Table 149. ADC Sample Settling Time (ADCSST)

Bit	7	6	5	4	3	2	1	0
Field	Reserved				SST			
RESET	0				1	1	1	1
R/W	R				R/W			
Address	F74h							

Bit	Description
[7:4]	**Reserved** These bits are reserved and must be programmed to 0000.
[3:0] SST	**Sample Settling Time** 0h–Fh = Number of system clock periods to meet 0.5 µs minimum.

Hex Address: F75

Table 150. ADC Sample Time (ADCST)

Bit	7	6	5	4	3	2	1	0
Field	Reserved		ST					
RESET	0		1	1	1	1	1	1
R/W	R/W		R/W					
Address	F75h							

Bit	Description
[7:6]	**Reserved** This register is reserved and must be programmed to 0.
[5:0] ST	**Sample/Hold Time** 0h–Fh = Number of system clock periods to meet 1 µs minimum.

Hex Addresses: F77–F7F

This address range is reserved.

Low Power Control

For more information about the Power Control Register, see the Power Control Register Definitions section on page 31.

Hex Address: F80

Table 151. Power Control Register 0 (PWRCTL0)

Bit	7	6	5	4	3	2	1	0
Field	Reserved			VBO	Reserved	Reserved	COMP	Reserved
RESET	1	0	0	0	1	0	0	0
R/W	R/W	R/W	R/W	R/W	R/W	R/W	R/W	R/W
Address	F80h							

Hex Address: F81

This address range is reserved.

LED Controller

For more information about the LED Drive registers, see the GPIO Control Register Definitions section on page 39.

Hex Address: F82

Table 152. LED Drive Enable (LEDEN)

Bit	7	6	5	4	3	2	1	0
Field	LEDEN[7:0]							
RESET	0	0	0	0	0	0	0	0
R/W	R/W	R/W	R/W	R/W	R/W	R/W	R/W	R/W
Address	F82h							

Hex Address: F83

Table 153. LED Drive Level High Register (LEDLVLH)

Bit	7	6	5	4	3	2	1	0
Field	LEDLVLH[7:0]							
RESET	0	0	0	0	0	0	0	0
R/W	R/W	R/W	R/W	R/W	R/W	R/W	R/W	R/W
Address	F83h							

Hex Address: F84

Table 154. LED Drive Level Low Register (LEDLVLL)

Bit	7	6	5	4	3	2	1	0
Field	LEDLVLL[7:0]							
RESET	0	0	0	0	0	0	0	0
R/W	R/W	R/W	R/W	R/W	R/W	R/W	R/W	R/W
Address	F84h							

Hex Address: F85

This address range is reserved.

Oscillator Control

For more information about the Oscillator Control registers, see the Oscillator Control Register Definitions section on page 154.

Hex Address: F86

Table 155. Oscillator Control Register (OSCCTL)

Bit	7	6	5	4	3	2	1	0
Field	INTEN	XTLEN	WDTEN	POFEN	WDFEN	SCKSEL		
RESET	1	0	1	0	0	0	0	0
R/W	R/W	R/W	R/W	R/W	R/W	R/W	R/W	R/W
Address	F86h							

Hex Addresses: F87–F8F

This address range is reserved.

Comparator 0

For more information about the Comparator Register, see the Comparator Control Register Definitions section on page 107.

Hex Address: F90

Table 156. Comparator Control Register (CMP0)

Bit	7	6	5	4	3	2	1	0
Field	Reserved	INNSEL	REFLVL				Reserved	
RESET	0	0	0	1	0	1	0	0
R/W	R/W	R/W	R/W	R/W	R/W	R/W	R/W	R/W
Address	F90h							

Hex Addresses: F91–FBF

This address range is reserved.

Interrupt Controller

For more information about the Interrupt Control registers, see the Interrupt Control Register Definitions section on page 57.

Hex Address: FC0

Table 157. Interrupt Request 0 Register (IRQ0)

Bit	7	6	5	4	3	2	1	0
Field	Reserved	T1I	T0I	Reserved	Reserved	Reserved	Reserved	ADCI
RESET	0	0	0	0	0	0	0	0
R/W	R/W	R/W	R/W	R/W	R/W	R/W	R/W	R/W
Address	FC0h							

Hex Address: FC1

Table 158. IRQ0 Enable High Bit Register (IRQ0ENH)

Bit	7	6	5	4	3	2	1	0
Field	Reserved	T1ENH	T0ENH	Reserved	Reserved	Reserved	Reserved	ADCENH
RESET	0	0	0	0	0	0	0	0
R/W	R/W	R/W	R/W	R/W	R/W	R/W	R/W	R/W
Address	FC1h							

Hex Address: FC2

Table 159. IRQ0 Enable Low Bit Register (IRQ0ENL)

Bit	7	6	5	4	3	2	1	0
Field	Reserved	T1ENL	T0ENL	Reserved	Reserved	Reserved	Reserved	ADCENL
RESET	0	0	0	0	0	0	0	0
R/W	R	R/W	R/W	R/W	R/W	R	R	R/W
Address	FC2h							

Hex Address: FC3

Table 160. Interrupt Request 1 Register (IRQ1)

Bit	7	6	5	4	3	2	1	0
Field	PA7I	PA6CI	PA5I	PA4I	PA3I	PA2I	PA1I	PA0I
RESET	0	0	0	0	0	0	0	0
R/W	R/W	R/W	R/W	R/W	R/W	R/W	R/W	R/W
Address	FC3h							

Hex Address: FC4

Table 161. IRQ1 Enable High Bit Register (IRQ1ENH)

Bit	7	6	5	4	3	2	1	0
Field	PA7ENH	PA6CENH	PA5ENH	PA4ENH	PA3ENH	PA2ENH	PA1ENH	PA0ENH
RESET	0	0	0	0	0	0	0	0
R/W	R/W	R/W	R/W	R/W	R/W	R/W	R/W	R/W
Address	FC4h							

Hex Address: FC5

Table 162. IRQ1 Enable Low Bit Register (IRQ1ENL)

Bit	7	6	5	4	3	2	1	0
Field	PA7ENL	PA6CENL	PA5ENL	PA4ENL	PA3ENL	PA2ENL	PA1ENL	PA0ENL
RESET	0	0	0	0	0	0	0	0
R/W	R/W	R/W	R/W	R/W	R/W	R/W	R/W	R/W
Address	FC5h							

Hex Address: FC6

Table 163. Interrupt Request 2 Register (IRQ2)

Bit	7	6	5	4	3	2	1	0
Field	Reserved				PC3I	PC2I	PC1I	PC0I
RESET	0	0	0	0	0	0	0	0
R/W	R/W	R/W	R/W	R/W	R/W	R/W	R/W	R/W
Address	FC6h							

Hex Address: FC7

Table 164. IRQ2 Enable High Bit Register (IRQ2ENH)

Bit	7	6	5	4	3	2	1	0
Field	Reserved				C3ENH	C2ENH	C1ENH	C0ENH
RESET	0	0	0	0	0	0	0	0
R/W	R/W	R/W	R/W	R/W	R/W	R/W	R/W	R/W
Address	FC7h							

Hex Address: FC8

Table 165. IRQ2 Enable Low Bit Register (IRQ2ENL)

Bit	7	6	5	4	3	2	1	0
Field	Reserved				C3ENL	C2ENL	C1ENL	C0ENL
RESET	0	0	0	0	0	0	0	0
R/W	R/W	R/W	R/W	R/W	R/W	R/W	R/W	R/W
Address	FC8h							

Hex Addresses: FC9–FCC

This address range is reserved.

Hex Address: FCD

Table 166. Interrupt Edge Select Register (IRQES)

Bit	7	6	5	4	3	2	1	0
Field	IES7	IES6	IES5	IES4	IES3	IES2	IES1	IES0
RESET	0	0	0	0	0	0	0	0
R/W	R/W	R/W	R/W	R/W	R/W	R/W	R/W	R/W
Address	FCDh							

Hex Address: FCE

Table 167. Shared Interrupt Select Register (IRQSS)

Bit	7	6	5	4	3	2	1	0
Field	Reserved	PA6CS	Reserved					
RESET	0	0	0	0	0	0	0	0
R/W	R/W	R/W	R/W	R/W	R/W	R/W	R/W	R/W
Address	FCEh							

Hex Address: FCF

Table 168. Interrupt Control Register (IRQCTL)

Bit	7	6	5	4	3	2	1	0
Field	IRQE	Reserved						
RESET	0	0	0	0	0	0	0	0
R/W	R/W	R	R	R	R	R	R	R
Address	FCFh							

GPIO Port A

For more information about the GPIO registers, see the GPIO Control Register Definitions section on page 39.

Hex Address: FD0

Table 169. Port A GPIO Address Register (PAADDR)

Bit	7	6	5	4	3	2	1	0
Field	PADDR[7:0]							
RESET	00h							
R/W	R/W	R/W	R/W	R/W	R/W	R/W	R/W	R/W
Address	FD0h							

Hex Address: FD1

Table 170. Port A Control Registers (PACTL)

Bit	7	6	5	4	3	2	1	0
Field	PCTL							
RESET	00h							
R/W	R/W	R/W	R/W	R/W	R/W	R/W	R/W	R/W
Address	FD1h							

Hex Address: FD2

Table 171. Port A Input Data Registers (PAIN)

Bit	7	6	5	4	3	2	1	0
Field	PIN7	PIN6	PIN5	PIN4	PIN3	PIN2	PIN1	PIN0
RESET	X	X	X	X	X	X	X	X
R/W	R	R	R	R	R	R	R	R
Address	FD2h							

Hex Address: FD3

Table 172. Port A Output Data Register (PAOUT)

Bit	7	6	5	4	3	2	1	0
Field	POUT7	POUT6	POUT5	POUT4	POUT3	POUT2	POUT1	POUT0
RESET	0	0	0	0	0	0	0	0
R/W	R/W	R/W	R/W	R/W	R/W	R/W	R/W	R/W
Address	FD3h							

Hex Address: FD4

Table 173. Port B GPIO Address Register (PBADDR)

Bit	7	6	5	4	3	2	1	0
Field	PADDR[7:0]							
RESET	00h							
R/W	R/W	R/W	R/W	R/W	R/W	R/W	R/W	R/W
Address	FD4h							

Hex Address: FD5

Table 174. Port B Control Registers (PBCTL)

Bit	7	6	5	4	3	2	1	0
Field	PCTL							
RESET	00h							
R/W	R/W	R/W	R/W	R/W	R/W	R/W	R/W	R/W
Address	FD5h							

Hex Address: FD6

Table 175. Port B Input Data Registers (PBIN)

Bit	7	6	5	4	3	2	1	0
Field	PIN7	PIN6	PIN5	PIN4	PIN3	PIN2	PIN1	PIN0
RESET	X	X	X	X	X	X	X	X
R/W	R	R	R	R	R	R	R	R
Address	FD6h							

Hex Address: FD7

Table 176. Port B Output Data Register (PBOUT)

Bit	7	6	5	4	3	2	1	0
Field	POUT7	POUT6	POUT5	POUT4	POUT3	POUT2	POUT1	POUT0
RESET	0	0	0	0	0	0	0	0
R/W	R/W	R/W	R/W	R/W	R/W	R/W	R/W	R/W
Address	FD7h							

Hex Address: FD8

Table 177. Port C GPIO Address Register (PCADDR)

Bit	7	6	5	4	3	2	1	0
Field	PADDR[7:0]							
RESET	00h							
R/W	R/W	R/W	R/W	R/W	R/W	R/W	R/W	R/W
Address	FD8h							

Hex Address: FD9

Table 178. Port C Control Registers (PCCTL)

Bit	7	6	5	4	3	2	1	0
Field	PCTL							
RESET	00h							
R/W	R/W	R/W	R/W	R/W	R/W	R/W	R/W	R/W
Address	FD9h							

Hex Address: FDA

Table 179. Port C Input Data Registers (PCIN)

Bit	7	6	5	4	3	2	1	0
Field	PIN7	PIN6	PIN5	PIN4	PIN3	PIN2	PIN1	PIN0
RESET	X	X	X	X	X	X	X	X
R/W	R	R	R	R	R	R	R	R
Address	FDAh							

Hex Address: FDB

Table 180. Port C Output Data Register (PCOUT)

Bit	7	6	5	4	3	2	1	0
Field	POUT7	POUT6	POUT5	POUT4	POUT3	POUT2	POUT1	POUT0
RESET	0	0	0	0	0	0	0	0
R/W	R/W	R/W	R/W	R/W	R/W	R/W	R/W	R/W
Address	FDBh							

Hex Address: FDC

Table 181. Port D GPIO Address Register (PDADDR)

Bit	7	6	5	4	3	2	1	0
Field	PADDR[7:0]							
RESET	00h							
R/W	R/W	R/W	R/W	R/W	R/W	R/W	R/W	R/W
Address	FDCh							

Hex Address: FDD

Table 182. Port D Control Registers (PDCTL)

Bit	7	6	5	4	3	2	1	0
Field	PCTL							
RESET	00h							
R/W	R/W	R/W	R/W	R/W	R/W	R/W	R/W	R/W
Address	FDDh							

Hex Address: FDE

This address range is reserved.

Hex Address: FDF

Table 183. Port D Output Data Register (PDOUT)

Bit	7	6	5	4	3	2	1	0
Field	POUT7	POUT6	POUT5	POUT4	POUT3	POUT2	POUT1	POUT0
RESET	0	0	0	0	0	0	0	0
R/W	R/W	R/W	R/W	R/W	R/W	R/W	R/W	R/W
Address	FDFh							

Hex Addresses: FE0–FEF

This address range is reserved.

Watchdog Timer

For more information about the Watchdog Timer registers, see the Watchdog Timer Control Register Definitions section on page 95.

Hex Address: FF0

The Watchdog Timer Control Register address is shared with the read-only Reset Status Register.

Table 184. Watchdog Timer Control Register (WDTCTL)

Bit	7	6	5	4	3	2	1	0
Field	WDTUNLK							
RESET	X	X	X	X	X	X	X	X
R/W	W	W	W	W	W	W	W	W
Address	FF0h							

Table 185. Reset Status Register (RSTSTAT)

Bit	7	6	5	4	3	2	1	0
Field	POR	STOP	WDT	EXT	Reserved			
RESET	See Table 12 on page 29			0	0	0	0	0
R/W	R	R	R	R	R	R	R	R
Address	FF0h							

Hex Address: FF1

Table 186. Watchdog Timer Reload Upper Byte Register (WDTU)

Bit	7	6	5	4	3	2	1	0
Field	WDTU							
RESET	0	0	0	0	0	0	0	0
R/W	R/W*	R/W*	R/W*	R/W*	R/W*	R/W*	R/W*	R/W*
Address	FF1h							
Note: *Read returns the current WDT count value; write sets the appropriate reload value.								

Hex Address: FF2

Table 187. Watchdog Timer Reload High Byte Register (WDTH)

Bit	7	6	5	4	3	2	1	0
Field	WDTH							
RESET	0	0	0	0	0	1	0	0
R/W	R/W*	R/W*	R/W*	R/W*	R/W*	R/W*	R/W*	R/W*
Address	FF2h							
Note: *Read returns the current WDT count value; write sets the appropriate reload value.								

Hex Address: FF3

Table 188. Watchdog Timer Reload Low Byte Register (WDTL)

Bit	7	6	5	4	3	2	1	0
Field	WDTL							
RESET	0	0	0	0	0	0	0	0
R/W	R/W*	R/W*	R/W*	R/W*	R/W*	R/W*	R/W*	R/W*
Address	FF3h							
Note: *Read returns the current WDT count value; write sets the appropriate reload value.								

Hex Addresses: FF4–FF5

This address range is reserved.

Trim Bit Control

For more information about the Trim Bit Control registers, see the Flash Option Bit Control Register Definitions section on page 126.

Hex Address: FF6

Table 189. Trim Bit Address Register (TRMADR)

Bit	7	6	5	4	3	2	1	0
Field	TRMADR - Trim Bit Address (00h to 1Fh)							
RESET	0	0	0	0	0	0	0	0
R/W	R/W	R/W	R/W	R/W	R/W	R/W	R/W	R/W
Address	FF6h							

Hex Address: FF7

Table 190. Trim Bit Data Register (TRMDR)

Bit	7	6	5	4	3	2	1	0
Field	TRMDR - Trim Bit Data							
RESET	0	0	0	0	0	0	0	0
R/W	R/W	R/W	R/W	R/W	R/W	R/W	R/W	R/W
Address	FF7h							

Flash Memory Controller

For more information about the Flash Control registers, see the Flash Control Register Definitions section on page 118.

Hex Address: FF8

Table 191. Flash Control Register (FCTL)

Bit	7	6	5	4	3	2	1	0
Field	FCMD							
RESET	0	0	0	0	0	0	0	0
R/W	W	W	W	W	W	W	W	W
Address	FF8h							

Hex Address: FF8

Table 192. Flash Status Register (FSTAT)

Bit	7	6	5	4	3	2	1	0
Field	Reserved		FSTAT					
RESET	0	0	0	0	0	0	0	0
R/W	R	R	R	R	R	R	R	R
Address	FF8h							

Hex Address: FF9

The Flash Page Select Register is shared with the Flash Sector Protect Register.

Table 193. Flash Page Select Register (FPS)

Bit	7	6	5	4	3	2	1	0
Field	INFO_EN	PAGE						
RESET	0	0	0	0	0	0	0	0
R/W	R/W	R/W	R/W	R/W	R/W	R/W	R/W	R/W
Address	FF9h							

Table 194. Flash Sector Protect Register (FPROT)

Bit	7	6	5	4	3	2	1	0
Field	SPROT7	SPROT6	SPROT5	SPROT4	SPROT3	SPROT2	SPROT1	SPROT0
RESET	0	0	0	0	0	0	0	0
R/W	R/W	R/W	R/W	R/W	R/W	R/W	R/W	R/W
Address	FF9h							

Hex Address: FFA

Table 195. Flash Frequency High Byte Register (FFREQH)

Bit	7	6	5	4	3	2	1	0
Field	FFREQH							
RESET	0	0	0	0	0	0	0	0
R/W	R/W	R/W	R/W	R/W	R/W	R/W	R/W	R/W
Address	FFAh							

Hex Address: FFB

Table 196. Flash Frequency Low Byte Register (FFREQL)

Bit	7	6	5	4	3	2	1	0
Field	FFREQL							
RESET	0							
R/W	R/W							
Address	FFBh							

Index

Numerics

10-bit ADC 4

A

absolute maximum ratings 184
AC characteristics 189
ADC 166
    block diagram 99
    overview 98
ADC Channel Register 1 (ADCCTL) 102
ADC Data High Byte Register (ADCDH) 103
ADC Data Low Bit Register (ADCDL) 103, 104, 105
ADCX 166
ADD 166
add - extended addressing 166
add with carry 166
add with carry - extended addressing 166
additional symbols 165
address space 14
ADDX 166
analog block/PWM signal synchronization 100
analog block/PWM signal zynchronization 100
analog signals 11
analog-to-digital converter
    overview 98
AND 169
ANDX 169
architecture
    voltage measurements 98
arithmetic instructions 166
assembly language programming 162
assembly language syntax 163

B

B 165
b 164
BCLR 167
binary number suffix 165
BIT 167
bit 164
    clear 167
    manipulation instructions 167
    set 167
    set or clear 167
    swap 167
    test and jump 169
    test and jump if non-zero 169
    test and jump if zero 169
bit jump and test if non-zero 166
bit swap 169
block diagram 3
block transfer instructions 167
BRK 169
BSET 167
BSWAP 167, 169
BTJ 169
BTJNZ 166, 169
BTJZ 169

C

calibration and compensation, motor control measurements 101
CALL procedure 169
capture mode 89, 90
capture/compare mode 89
cc 164
CCF 168
characteristics, electrical 184
clear 168
CLR 168
COM 169
compare 89
compare - extended addressing 166
compare mode 89
compare with carry 166
compare with carry - extended addressing 166

complement 169
complement carry flag 167, 168
condition code 164
continuous mode 89
Control Registers 14, 17
counter modes 89
CP 166
CPC 166
CPCX 166
CPU and peripheral overview 4
CPU control instructions 168
CPX 166
current measurement
    architecture 98
    operation 99
Customer Feedback Form 239
Customer Information 239

D

DA 164, 166
data memory 16
DC characteristics 185
debugger, on-chip 139
DEC 166
decimal adjust 166
decrement 166
decrement and jump non-zero 169
decrement word 166
DECW 166
destination operand 165
device, port availability 33
DI 168
direct address 164
disable interrupts 168
DJNZ 169
dst 165

E

EI 168
electrical characteristics 184
    GPIO input data sample timing 195
    watch-dog timer 194
electrical noise 98
enable interrupt 168
ER 164
extended addressing register 164
external pin reset 25
eZ8 CPU features 4
eZ8 CPU instruction classes 166
eZ8 CPU instruction notation 164
eZ8 CPU instruction set 162
eZ8 CPU instruction summary 171

F

FCTL register 119, 126, 127, 228
features, Z8 Encore! 1
first opcode map 182
FLAGS 165
flags register 165
flash
    controller 4
    option bit address space 127
    option bit configuration - reset 124
    program memory address `0000h` 127
    program memory address `0001h` 128
flash memory 108
    byte programming 116
    code protection 114
    configurations 108
    control register definitions 118, 126
    controller bypass 117
    flash control register 119, 126, 127, 228
    flash option bits 115
    flash status register 120
    flow chart 113
    frequency high and low byte registers 123
    mass erase 117
    operation 112
    operation timing 114
    page erase 117
    page select register 121, 122
FPS register 121, 122
FSTAT register 120

G

gated mode 89
general-purpose I/O 33
GPIO 4, 33
    alternate functions 34
    architecture 34
    control register definitions 39
    input data sample timing 195
    interrupts 39
    port A-C pull-up enable sub-registers 46, 47, 48
    port A-H address registers 40
    port A-H alternate function sub-registers 42
    port A-H control registers 41
    port A-H data direction sub-registers 41
    port A-H high drive enable sub-registers 44
    port A-H input data registers 49
    port A-H output control sub-registers 43
    port A-H output data registers 50, 51
    port A-H stop mode recovery sub-registers 45
    port availability by device 33
    port input timing 195
    port output timing 196

H

H 165
HALT 168
halt mode 31, 168
hexadecimal number prefix/suffix 165

I

IM 164
immediate data 164
immediate operand prefix 165
INC 166
increment 166
increment word 167
INCW 167
indexed 165
indirect address prefix 165
indirect register 164
indirect register pair 164
indirect working register 164
indirect working register pair 164
instruction set, ez8 CPU 162
instructions
    ADC 166
    ADCX 166
    ADD 166
    ADDX 166
    AND 169
    ANDX 169
    arithmetic 166
    BCLR 167
    BIT 167
    bit manipulation 167
    block transfer 167
    BRK 169
    BSET 167
    BSWAP 167, 169
    BTJ 169
    BTJNZ 166, 169
    BTJZ 169
    CALL 169
    CCF 167, 168
    CLR 168
    COM 169
    CP 166
    CPC 166
    CPCX 166
    CPU control 168
    CPX 166
    DA 166
    DEC 166
    DECW 166
    DI 168
    DJNZ 169
    EI 168
    HALT 168
    INC 166
    INCW 167
    IRET 169
    JP 169
    LD 168
    LDC 168
    LDCI 167, 168

LDE 168
LDEI 167
LDX 168
LEA 168
load 168
logical 169
MULT 167
NOP 168
OR 169
ORX 169
POP 168
POPX 168
program control 169
PUSH 168
PUSHX 168
RCF 167, 168
RET 169
RL 169
RLC 169
rotate and shift 169
RR 170
RRC 170
SBC 167
SCF 167, 168
SRA 170
SRL 170
SRP 168
STOP 168
SUB 167
SUBX 167
SWAP 170
TCM 167
TCMX 167
TM 167
TMX 167
TRAP 169
watch-dog timer refresh 168
XOR 169
XORX 169
instructions, eZ8 classes of 166
interrupt control register 67
interrupt controller 53
architecture 53
interrupt assertion types 56
interrupt vectors and priority 56
operation 55
register definitions 57
software interrupt assertion 57
interrupt edge select register 65
interrupt request 0 register 58
interrupt request 1 register 59
interrupt request 2 register 60
interrupt return 169
interrupt vector listing 53
IR 164
Ir 164
IRET 169
IRQ0 enable high and low bit registers 60
IRQ1 enable high and low bit registers 62
IRQ2 enable high and low bit registers 63
IRR 164
Irr 164

J

JP 169
jump, conditional, relative, and relative conditional 169

L

LD 168
LDC 168
LDCI 167, 168
LDE 168
LDEI 167, 168
LDX 168
LEA 168
load 168
load constant 167
load constant to/from program memory 168
load constant with auto-increment addresses 168
load effective address 168
load external data 168
load external data to/from data memory and auto-increment addresses 167
load external to/from data memory and auto-increment addresses 168

load instructions 168
load using extended addressing 168
logical AND 169
logical AND/extended addressing 169
logical exclusive OR 169
logical exclusive OR/extended addressing 169
logical instructions 169
logical OR 169
logical OR/extended addressing 169
low power modes 30

M

master interrupt enable 55
memory
    data 16
    program 15
mode
    capture 89, 90
    capture/compare 89
    continuous 89
    counter 89
    gated 89
    one-shot 89
    PWM 89, 90
modes 89
motor control measurements
    ADC Control register definitions 101
    calibration and compensation 101
    interrupts 101
    overview 98
MULT 167
multiply 167

N

noise, electrical 98
NOP (no operation) 168
notation
    b 164
    cc 164
    DA 164
    ER 164
    IM 164
    IR 164
    Ir 164
    IRR 164
    Irr 164
    p 164
    R 165
    r 164
    RA 165
    RR 165
    rr 165
    vector 165
    X 165
notational shorthand 164

O

OCD
    architecture 139
    auto-baud detector/generator 142
    baud rate limits 142
    block diagram 139
    breakpoints 143
    commands 144
    control register 148
    data format 142
    DBG pin to RS-232 Interface 140
    debug mode 141
    debugger break 169
    interface 140
    serial errors 143
    status register 150
    timing 197
OCD commands
    execute instruction (12h) 148
    read data memory (0Dh) 147
    read OCD control register (05h) 146
    read OCD revision (00H) 145
    read OCD status register (02h) 145
    read program counter (07h) 146
    read program memory (0Bh) 147
    read program memory CRC (0Eh) 147
    read register (09h) 146
    read runtime counter (03h) 145
    step instruction (10H) 148

stuff instruction (11h) 148
write data memory (0Ch) 147
write OCD control register (04h) 145
write program counter (06h) 146
write program memory (0Ah) 146
write register (08h) 146
on-chip debugger (OCD) 139
on-chip debugger signals 12
on-chip oscillator 157
one-shot mode 89
opcode map
abbreviations 181
cell description 180
first 182
second after 1Fh 183
operation 100
current measurement 99
voltage measurement timing diagram 100
Operational Description 21, 30, 33, 53, 68, 92, 98, 106, 108, 124, 134, 139, 151, 157, 161
OR 169
ordering information 200
ORX 169
oscillator signals 12

P

p 164
Packaging 199
part selection guide 2
PC 165
peripheral AC and DC electrical characteristics 190
pin characteristics 13
Pin Descriptions 7
polarity 164
POP 168
pop using extended addressing 168
POPX 168
port availability, device 33
port input timing (GPIO) 195
port output timing, GPIO 196
power supply signals 12
power-on reset (POR) 23
program control instructions 169
program counter 165
program memory 15
PUSH 168
push using extended addressing 168
PUSHX 168
PWM mode 89, 90
PxADDR register 40, 222, 223, 224, 225
PxCTL register 41, 222, 223, 224, 225

R

R 165
r 164
RA
register address 165
RCF 167, 168
register 165
flash control (FCTL) 119, 126, 127, 228
flash high and low byte (FFREQH and FREEQL) 123
flash page select (FPS) 121, 122
flash status (FSTAT) 120
GPIO port A-H address (PxADDR) 40, 222, 223, 224, 225
GPIO port A-H alternate function sub-registers 42
GPIO port A-H control address (PxCTL) 41, 222, 223, 224, 225
GPIO port A-H data direction sub-registers 41
OCD control 148
OCD status 150
watch-dog timer control (WDTCTL) 95, 107, 154, 217, 218, 226
watchdog timer control (WDTCTL) 29
watch-dog timer reload high byte (WDTH) 227
watchdog timer reload high byte (WDTH) 96
watch-dog timer reload low byte (WDTL) 227
watchdog timer reload low byte (WDTL) 97
watch-dog timer reload upper byte (WDTU) 227
watchdog timer reload upper byte (WDTU) 96
register file 14
register pair 165
register pointer 165

registers
ADC channel 1 102
ADC data high byte 103
ADC data low bit 103, 104, 105
reset
and stop mode characteristics 22
and stop mode recovery 21
carry flag 167
sources 23
RET 169
return 169
RL 169
RLC 169
rotate and shift instuctions 169
rotate left 169
rotate left through carry 169
rotate right 170
rotate right through carry 170
RP 165
RR 165, 170
rr 165
RRC 170

S

SBC 167
SCF 167, 168
second opcode map after 1Fh 183
set carry flag 167, 168
set register pointer 168
shift right arithmatic 170
shift right logical 170
signal descriptions 11
software trap 169
source operand 165
SP 165
SRA 170
src 165
SRL 170
SRP 168
stack pointer 165
STOP 168
stop mode 30, 168
stop mode recovery
sources 26
using a GPIO port pin transition 27, 28
using watch-dog timer time-out 27
SUB 167
subtract 167
subtract - extended addressing 167
subtract with carry 167
subtract with carry - extended addressing 167
SUBX 167
SWAP 170
swap nibbles 170
symbols, additional 165

T

Table 134. Power Consumption Reference Table 197
TCM 167
TCMX 167
test complement under mask 167
test complement under mask - extended addressing 167
test under mask 167
test under mask - extended addressing 167
tiing diagram, voltage measurement 100
timer signals 11
timers 68
architecture 68
block diagram 69
capture mode 77, 78, 89, 90
capture/compare mode 81, 89
compare mode 79, 89
continuous mode 70, 89
counter mode 71, 72
counter modes 89
gated mode 80, 89
one-shot mode 69, 89
operating mode 69
PWM mode 74, 75, 89, 90
reading the timer count values 82
reload high and low byte registers 85
timer control register definitions 83
timer output signal operation 82
timers 0-3

control registers 87, 88
high and low byte registers 83, 86
TM 167
TMX 167
TRAP 169

V

vector 165
voltage brown-out reset (VBR) 24
voltage measurement timing diagram 100

W

watch-dog timer
approximate time-out delay 92
approximate time-out delays 92, 106, 134, 151, 161
CNTL 24
control register 95, 154
electrical characteristics and timing 194
interrupt in noromal operation 93
interrupt in stop mode 93
operation 92, 106, 134, 151, 161
refresh 93
reload unlock sequence 94
reload upper, high and low registers 96
reset 25
reset in normal operation 94
reset in Stop mode 94
time-out response 93
watchdog timer
refresh 168
WDTCTL register 29, 95, 107, 154, 217, 218, 226
WDTH register 96, 227
WDTL register 97, 227
working register 164
working register pair 165
WTDU register 96, 227

X

X 165
XOR 169
XORX 169

Z

Z8 Encore!
block diagram 3
features 1
part selection guide 2

Customer Support

To share comments, get your technical questions answered or report issues you may be experiencing with our products, please visit Zilog's Technical Support page at http://support.zilog.com.

To learn more about this product, find additional documentation or to discover other facets about Zilog product offerings, please visit the Zilog Knowledge Base at http://zilog.com/kb or consider participating in the Zilog Forum at http://zilog.com/forum.

This publication is subject to replacement by a later edition. To determine whether a later edition exists, please visit the Zilog website at http://www.zilog.com.