6-A, 2.2-V to 5.5-V INPUT, NON-ISOLATED, WIDE-OUTPUT, ADJUSTABLE POWER MODULE WITH *TurboTrans™*

FEATURES

- **Up to 6-A Output Current**
- **2.2-V to 5.5-V Input Voltage**
- **Wide-Output Voltage Adjust (0.69 V to 3.6 V)**
- **±1.5% Total Output Voltage Variation**
- **Efficiencies up to 96%**
- **Output Overcurrent Protection (Nonlatching, Auto-Reset)**
- **Operating Temperature: –40°C to 85°C**
- **Safety Agency Approvals:**
  - **UL60950, CSA 22.2 950, EN60950 VDE**
- **Prebias Startup**
- **On/Off Inhibit**
- **Differential Output Voltage Remote Sense**
- **Adjustable Undervoltage Lockout**
- **Auto-Track™ Sequencing**
- **Ceramic Capacitor Version (PTH04T231W)**
- **TurboTrans™ Technology**
- **Designed to meet Ultra-Fast Transient Requirements up to 300 A/μs**
- **SmartSync Technology**

APPLICATIONS

- **Complex Multi-Voltage Systems**
- **Microprocessors**
- **Bus Drivers**



DESCRIPTION

The PTH04T230/231W is a high-performance, 6-A rated, non-isolated power module. This regulator represents the 2nd generation of the PTH series of power modules which include a reduced footprint and improved features. The PTH04T231W is optimized to be used in applications requiring all ceramic capacitors.

Operating from an input voltage range of 2.2 V to 5.5 V, the PTH04T230/231W requires a single resistor to set the output voltage to any value over the range, 0.69 V to 3.6 V. The wide input voltage range makes the PTH04T230/231W particularly suitable for advanced computing and server applications that use a 2.5-V, 3.3-V or 5-V intermediate bus architecture.

The module incorporates a comprehensive list of features. Output over-current and over-temperature shutdown protects against most load faults. A differential remote sense ensures tight load regulation. An adjustable under-voltage lockout allows the turn-on voltage threshold to be customized. Auto-Track™ sequencing is a popular feature that greatly simplifies the simultaneous power-up and power-down of multiple modules in a power system.

The PTH04T230/231W includes new patent pending technologies, **TurboTrans™** and **SmartSync**. The TurboTrans feature optimizes the transient response of the regulator while simultaneously reducing the quantity of external output capacitors required to meet a target voltage deviation specification. Additionally, for a target output capacitor bank, TurboTrans can be used to significantly improve the regulators transient response by reducing the peak voltage deviation. SmartSync allows for switching frequency synchronization of multiple modules, thus simplifying EMI noise suppression tasks and reduces input capacitor RMS current requirements. Double-sided surface mount construction provides a low profile and compact footprint. Package options include both through-hole and surface mount configurations that are lead (Pb) - free and RoHS compatible.

Please be aware that an important notice concerning availability, standard warranty, and use in critical applications of Texas Instruments semiconductor products and disclaimers thereto appears at the end of this data sheet.

TurboTrans, TMS320 are trademarks of Texas Instruments.

PRODUCTION DATA information is current as of publication date. Products conform to specifications per the terms of the Texas Instruments standard warranty. Production processing does not necessarily include testing of all parameters.

Copyright © 2006–2009, Texas Instruments Incorporated

These devices have limited built-in ESD protection. The leads should be shorted together or the device placed in conductive foam during storage or handling to prevent electrostatic damage to the MOS gates.

PTH04T230W

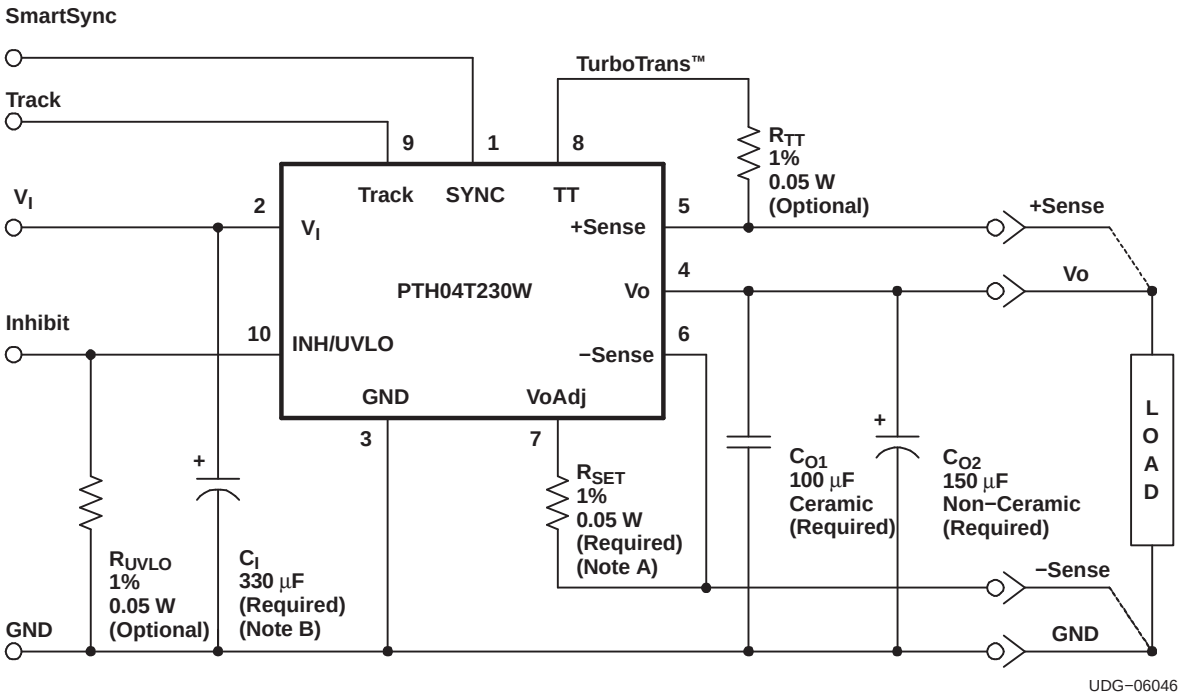

A. R_{SET} required to set the output voltage to a value higher than 0.69 V. See the *Electrical Characteristics* table.

B. An additional 22-µF ceramic input capacitor is recommended to reduce RMS ripple current.

PTH04T231W - Ceramic Capacitor Version

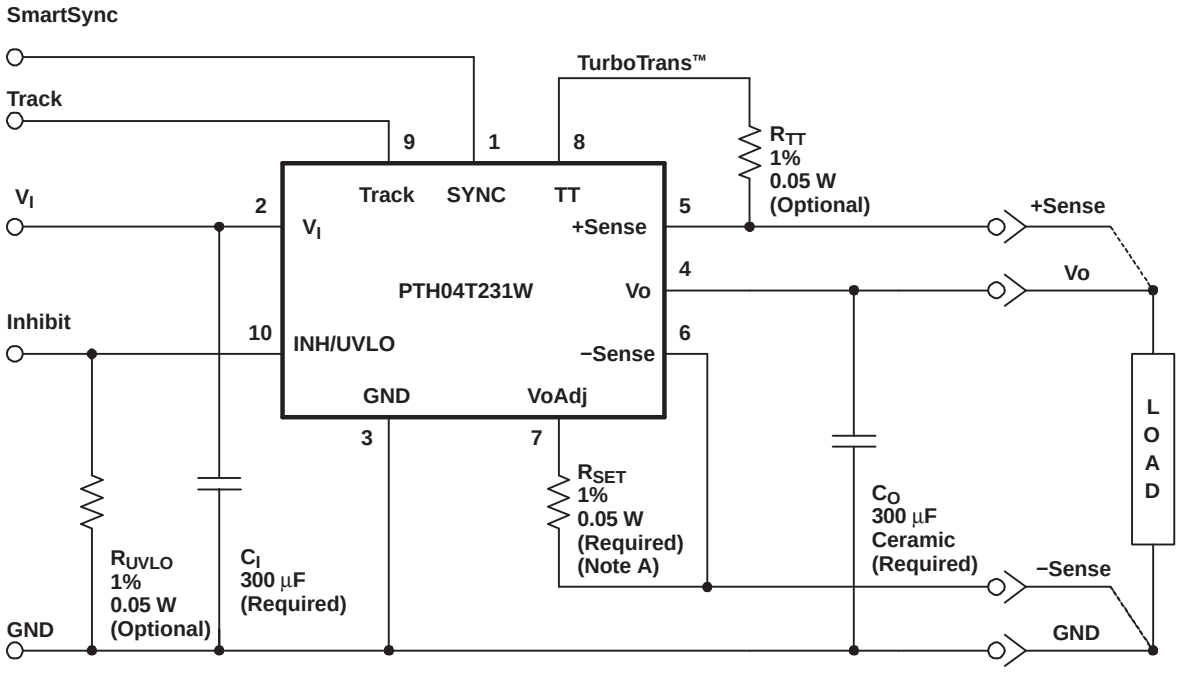

Copyright © 2006–2009, Texas Instruments Incorporated

ORDERING INFORMATION

For the most current package and ordering information, see the Package Option Addendum at the end of this data sheet, or see the TI website at www.ti.com.

DATASHEET TABLE OF CONTENTS

DATASHEET SECTION	PAGE NUMBER
ENVIRONMENTAL AND ABSOLUTE MAXIMUM RATINGS	3
ELECTRICAL CHARACTERISTICS TABLE (PTH04T230W)	4
ELECTRICAL CHARACTERISTICS TABLE (PTH04T231W)	6
PIN-OUT AND TERMINAL FUNCTIONS	8
TYPICAL CHARACTERISTICS (V_I = 5V)	9
TYPICAL CHARACTERISTICS (V_I = 3.3V)	10
ADJUSTING THE OUTPUT VOLTAGE	11
CAPACITOR RECOMMENDATIONS	13
TURBOTRANS™ INFORMATION	17
UNDERVOLTAGE LOCKOUT (UVLO)	22
SOFT-START POWER-UP	23
REMOTE SENSE	23
OUTPUT ON/OFF INHIBIT	24
OVER-CURRENT PROTECTION	24
OVER-TEMPERATURE PROTECTION	25
SYCHRONIZATION (SMARTSYNC)	25
AUTO-TRACK SEQUENCING	26
PREBIAS START-UP	28
TAPE & REEL AND TRAY DRAWINGS	30

ENVIRONMENTAL AND ABSOLUTE MAXIMUM RATINGS

(Voltages are with respect to GND)

					UNIT
V_{Track}	Track pin voltage			–0.3 to V_I + 0.3	V
T_A	Operating temperature range	Over V_I range		–40 to 85	°C
T_{wave}	Wave soldering temperature	Surface temperature of module body or pins **(5 seconds maximum)**	AD suffix	260	
T_{reflow}	Solder reflow temperature	Surface temperature of module body or pins	AS suffix	235(1)	
			AZ suffix	260(1)	
T_{stg}	Storage temperature	Storage temperature of module removed from shipping package		–55 to 125	
T_{pkg}	Packaging temperature	Shipping Tray or Tape and Reel storage or bake temperature		45	
	Mechanical shock	Per Mil-STD-883D, Method 2002.3 1 msec, 1/2 sine, mounted	Suffix AD	500	G
			Suffix AS and AZ	250	
	Mechanical vibration	Mil-STD-883D, Method 2007.2 20-2000 Hz	Suffix AD	20	
			Suffix AS and AZ	15	
	Weight			2.7	grams
	Flammability	Meets UL94V-O			

(1) During reflow of surface mount package version do not elevate peak temperature of the module, pins or internal components above the stated maximum.

Copyright © 2006–2009, Texas Instruments Incorporated

ELECTRICAL CHARACTERISTICS

PTH04T230W

T_A =25°C, V_I = 5 V, V_O = 3.3 V, C_I = 330 µF, C_O1 = 100 µF ceramic, C_O2 = 150 µF non-ceramic, and I_O = I_O max (unless otherwise stated)

PARAMETER		TEST CONDITIONS			PTH04T230W			UNIT
					MIN	TYP	MAX	
I_O	Output current	Over V_O range	25°C, natural convection		0		6	A
V_I	Input voltage range	Over I_O range		0.69 ≤ V_O ≤ 1.7	2.2		5.5	V
				1.7 < V_O ≤ 3.6	V_O+0.5 (1)		5.5	
V_O	Output adjust range	Over I_O range			0.69		3.6	V
	Set-point voltage tolerance					±0.5	±1.0 (2)	%V_o
	Temperature variation	–40°C < T_A < 85°C				±0.3		%V_o
	Line regulaltion	Over V_I range				±2		mV
	Load regulation	Over I_O range				±2		mV
	Total output variation	Includes set-point, line, load, –40°C ≤ T_A ≤ 85°C					±1.5 (2)	%V_O
η	Efficiency	I_O = 6 A	R_{SET} = 1.21 kΩ, V_O = 3.3 V			94%		
			R_{SET} = 2.38 kΩ, V_O = 2.5 V			92%		
			R_{SET} = 4.78 kΩ, V_O = 1.8 V			90%		
			R_{SET} = 7.09 kΩ, V_O = 1.5 V			89%		
			R_{SET} = 12.1 kΩ, V_O = 1.2 V			87%		
			R_{SET} = 20.8 kΩ, V_O = 1.0 V			85%		
			R_{SET} = 689 kΩ, V_O = 0.7 V			81%		
	V_O Ripple (peak-to-peak)	20-MHz bandwidth				1		%V_O
I_{LIM}	Overcurrent threshold	Reset, followed by auto-recovery				10		A
	Transient response	2.5 A/µs load step 50% to 100% $I_O$max V_I = 3.3 V V_O = 2.5 V	w/o TurboTrans C_O1 = 100 µF, ceramic C_O2 = 150 µF, non-ceramic	Recovery Time		100		µSec
				V_O Overshoot		100		mV
			w/o TurboTrans (3) C_O1 = 100 µF, ceramic C_O2 = 990 µF, Type B	Recovery Time		120		µSec
				V_O Overshoot		60		mV
			with TurboTrans C_O1 = 100 µF, ceramic C_O2 = 990 µF, Type B R_{TT} = 1.54 kΩ	Recovery Time		180		µSec
				V_O Overshoot		35		mV
I_{IL}	Track input current (pin 9)	Pin to GND					-130 (4)	µA
dV_{track}/dt	Track slew rate capability	C_O ≤ C_O (max)					1	V/ms
$UVLO_{ADJ}$	Adjustable Under-voltage lockout (pin 10)	V_I increasing, R_{UVLO} = OPEN				1.95	2.19	V
		V_I decreasing, R_{UVLO} = OPEN			1.3	1.5		
		Hysteresis, R_{UVLO} ≤ 52.3 kΩ				0.5		
	Inhibit control (pin 10)	Input high voltage (V_{IH})					Open (5)	V
		Input low voltage (V_{IL})			-0.2		0.6	
		Input low current (I_{IL}), Pin 10 to GND				125		µA
I_{in}	Input standby current	Inhibit (pin 10) to GND, Track (pin 9) open				5		mA
f_s	Switching frequency	Over V_I and I_O ranges, SmartSync (pin 1) to GND				300		kHz
f_{SYNC}	Synchronization (SYNC) frequency				240		400	kHz
V_{SYNCH}	SYNC High-Level Input Voltage				2		5.5	V
V_{SYNCL}	SYNC Low-Level Input Voltage						0.8	V
t_{SYNC}	SYNC Minimum Pulse Width				200			nSec

(1) The minimum input voltage is 2.2 V or (V_O + 0.5) V, whichever is greater.
(2) The set-point voltage tolerance is affected by the tolerance and stability of R_{SET}. The stated limit is unconditionally met if R_{SET} has a tolerance of 1% with 200 ppm/C or better temperature stability.
(3) Without *TurboTrans*, the minimum ESR limit of 7 mΩ must not be violated.
(4) A low-leakage (<100 nA), open-drain device, such as MOSFET or voltage supervisor IC, is recommended to control pin 9. The open-circuit voltage is less than V_I.
(5) This control pin has an internal pull-up. Do not place an external pull-up on this pin. If it is left open-circuit, the module operates when input power is applied. A small, low-leakage (<100 nA) MOSFET is recommended for control. The open-circuit voltage is less than 3.5 Vdc. For additional information, see the related application information section.

Copyright © 2006–2009, Texas Instruments Incorporated

ELECTRICAL CHARACTERISTICS (continued)

PTH04T230W

T_A =25°C, V_I = 5 V, V_O = 3.3 V, C_I = 330 µF, C_O1 = 100 µF ceramic, C_O2 = 150 µF non-ceramic, and I_O = I_O max (unless otherwise stated)

PARAMETER		TEST CONDITIONS			PTH04T230W			UNIT
					MIN	TYP	MAX	
C_I	External input capacitance				330 (6)			µF
C_O	External output capacitance	without TurboTrans	Capacitance value	Nonceramic	150 (7)		5000 (8)	µF
				Ceramic	100 (7)		500	
			Equivalent series resistance (non-ceramic)		7			mΩ
		with Turbotrans	Capacitance value		see table (9)		5,000 (10)	µF
			Capacitance × ESR product (C_O × ESR)		1000		10,000	µF×mΩ
MTBF	Reliability	Per Telcordia SR-332, 50% stress, T_A = 40°C, ground benign			5.3			10^6 Hr

(6) A 330 µF input capacitor is required for proper operation. The capacitor must be rated for a minimum of 400 mA rms of ripple current. An additional 22-µF ceramic input capacitor is recommended to reduce rms ripple current.
(7) 100 µF ceramic and 150 F non-ceramic external output capacitance is required for basic operation. The minimum output capacitance requirement increases when *TurboTrans™* (TT) technology is used. See the Application Information for more guidance.
(8) This is the calculated maximum disregarding *TurboTrans™* technology. When the *TurboTrans* feature is used, the minimum output capacitance must be increased. See the *TurboTrans* application notes for further guidance.
(9) When using *TurboTrans™* technology, a minimum value of output capacitance is required for proper operation. Additionally, low ESR capacitors are required for proper operation. See the *TurboTrans* application notes for further guidance.
(10) This is the calaculated maximum when using the *TurboTrans* feature. Additionally, low ESR capacitors are required for proper operation. See the *TurboTrans* application notes for further guidance.

Copyright © 2006–2009, Texas Instruments Incorporated

ELECTRICAL CHARACTERISTICS

PTH04T231W (Ceramic Capacitors)

T_A = 25°C, V_I = 5 V, V_O = 3.3 V, C_I = 300 µF ceramic, C_O = 300 µF ceramic, and I_O = I_O max (unless otherwise stated)

PARAMETER		TEST CONDITIONS			PTH04T231W			UNIT
					MIN	TYP	MAX	
I_O	Output current	Over V_O range	25°C, natural convection		0		6	A
V_I	Input voltage range	Over I_O range		0.69 ≤ V_O ≤ 1.7	2.2		5.5	V
				1.7 < V_O ≤ 3.6	V_O+0.5 (1)		5.5	
V_{OADJ}	Output voltage adjust range	Over I_O range			0.69		3.6	V
V_O	Set-point voltage tolerance					±0.5	±1 (2)	%V_o
	Temperature variation	–40°C < T_A < 85°C				±0.3		%V_o
	Line regulaltion	Over V_I range				±2		mV
	Load regulation	Over I_O range				±2		mV
	Total output variation	Includes set-point, line, load, –40°C ≤ T_A ≤ 85°C					±1.5 (2)	%V_o
η	Efficiency	I_O = 6 A	R_{SET} = 1.21 kΩ, V_O = 3.3 V			94%		
			R_{SET} = 2.38 kΩ, V_O = 2.5 V			92%		
			R_{SET} = 4.78 kΩ, V_O = 1.8 V			90%		
			R_{SET} = 7.09 kΩ, V_O = 1.5 V			89%		
			R_{SET} = 12.1 kΩ, V_O = 1.2 V			87%		
			R_{SET} = 20.8 kΩ, V_O = 1.0 V			85%		
			R_{SET} = 689 kΩ, V_O = 0.7 V			81%		
	V_O Ripple (peak-to-peak)	20-MHz bandwidth				1		%V_O
I_{LIM}	Overcurrent threshold	Reset, followed by auto-recovery				10		A
	Transient response	2.5 A/µs load step 50 to 100% $I_O$max V_I = 3.3 V V_O = 2.5 V	w/o TurboTrans C_O= 300 µF, TypeA	Recovery time		100		µs
				V_O over/undershoot		70		mV
			w/o TurboTrans C_O= 800 µF, TypeA R_{TT} = open	Recovery time		100		µs
				V_O over/undershoot		55		mV
			w/ TurboTrans C_O= 800 µF, TypeA R_{TT} = 11.3 kΩ	Recovery time		150		µs
				V_O over/undershoot		35		mV
I_{IL}	Track input current (pin 9)	Pin to GND					–130 (3)	µA
dV_{track}/dt	Track slew rate capability	C_O ≤ C_O (max)					1	V/ms
$UVLO_{ADJ}$	Adjustable Under-voltage lockout (pin 10)	V_I increasing, R_{UVLO} = OPEN				1.95	2.19	V
		V_i decreasing, R_{UVLO} = OPEN			1.3	1.5		
		Hysteresis, R_{UVLO} = OPEN				0.5		
	Inhibit control (pin 10)	Input high voltage (V_{IH})					Open (4)	V
		Input low voltage (V_{IL})			-0.2		0.8	
		Input low current (I_{IL}), Pin 10 to GND				-235		µA
I_{in}	Input standby current	Inhibit (pin 10) to GND, Track (pin 9) open				5		mA
f_s	Switching frequency	Over V_I and I_O ranges, SmartSync (pin 1) to GND				300		kHz
f_{SYNC}	Synchronization (SYNC) frequency				240		400	kHz
V_{SYNCH}	SYNC High-Level Input Voltage				2		5.5	V
V_{SYNCL}	SYNC Low-Level Input Voltage						0.8	V
t_{SYNC}	SYNC Minimum Pulse Width				200			nSec
C_I	External input capacitance			Ceramic	300 (5)			µF

(1) The minimum input voltage is 2.2 V or (V_O + 0.5) V, whichever is greater.
(2) The set-point voltage tolerance is affected by the tolerance and stability of R_{SET}. The stated limit is unconditionally met if R_{SET} has a tolerance of 1% with 100 ppm/C or better temperature stability. .
(3) A low-leakage (<100 nA), open-drain device, such as MOSFET or voltage supervisor IC, is recommended to control pin 9. The open-circuit voltage is less than V_I.
(4) This control pin has an internal pull-up. Do not place an external pull-up on this pin. If it is left open-circuit, the module operates when input power is applied. A small, low-leakage (<100 nA) MOSFET is recommended for control. The open-circuit voltage is less than 3.5 Vdc. For additional information, see the related application note.
(5) 300 µF of ceramic input capacitance is required for proper operation.

Copyright © 2006–2009, Texas Instruments Incorporated

ELECTRICAL CHARACTERISTICS (continued)

PTH04T231W (Ceramic Capacitors)

T_A = 25°C, V_I = 5 V, V_O = 3.3 V, C_I = 300 µF ceramic, C_O = 300 µF ceramic, and I_O = I_O max (unless otherwise stated)

PARAMETER		TEST CONDITIONS			PTH04T231W			UNIT
					MIN	TYP	MAX	
C_O	External output capacitance	w/o TurboTrans	Capacitance Value	Ceramic	300 (6)		5000 (7)	µF
		w/ TurboTrans	Capacitance Value		see table (6)		5000	µF
			Capacitance × ESR product (C_O × ESR)		100		1000	µF×mΩ
MTBF	Reliability	Per Telcordia SR-332, 50% stress, T_A = 40°C, ground benign			5.3			10^6 Hr

(6) 300 µF of ceramic output capacitance is required for basic operation. The minimum output capacitance requirement increases when *TurboTrans™* (TT) technology is utilized. Additionally, low ESR capacitors are required for proper operation. See related Application Information for more guidance.

(7) This is the calculated maximum disregarding *TurboTrans™* technology.

Copyright © 2006–2009, Texas Instruments Incorporated

PTH04T230/231W
(TOP VIEW)

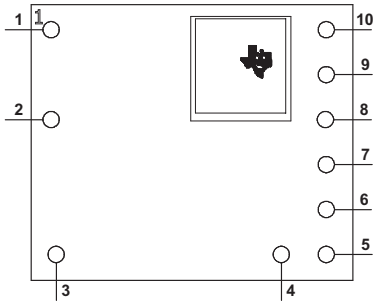

TERMINAL FUNCTIONS

TERMINAL		DESCRIPTION
NAME	NO.	
V_I	2	The positive input voltage power node to the module, which is referenced to common GND.
V_O	4	The regulated positive power output with respect to the GND.
GND	3	This is the common ground connection for the V_I and V_O power connections. It is also the 0 Vdc reference for the control inputs.
Inhibit and UVLO(1)	10	The Inhibit pin is an open-collector/drain, negative logic input that is referenced to GND. Applying a low level ground signal to this input disables the module's output and turns off the output voltage. When the Inhibit control is active, the input current drawn by the regulator is significantly reduced. If the Inhibit pin is left open-circuit, the module produces an output whenever a valid input source is applied. This pin is also used for input undervoltage lockout (UVLO) programming. Connecting a resistor from this pin to GND (pin 3) allows the ON threshold of the UVLO to be adjusted higher than the default value. For more information, see the Application Information section.
V_O Adjust	7	A 0.05 W 1% resistor must be directly connected between this pin and pin 6 (– Sense) to set the output voltage to a value higher than 0.69 V. The temperature stability of the resistor should be 100 ppm/°C (or better). The setpoint range for the output voltage is from 0.69 V to 3.6 V. If left open circuit, the output voltage defaults to its lowest value. For further information, on output voltage adjustment see the related application note. The specification table gives the preferred resistor values for a number of standard output voltages.
+ Sense	5	The sense input allows the regulation circuit to compensate for voltage drop between the module and the load. For optimal voltage accuracy, +Sense must be connected to V_O, close to the load.
– Sense	6	The sense input allows the regulation circuit to compensate for voltage drop between the module and the load. For optimal voltage accuracy, –Sense must be connected to GND (pin 3), very close to the module (within 10 cm).
Track	9	This is an analog control input that enables the output voltage to follow an external voltage. This pin becomes active typically 20 ms after the input voltage has been applied, and allows direct control of the output voltage from 0 V up to the nominal set-point voltage. Within this range the module's output voltage follows the voltage at the Track pin on a volt-for-volt basis. When the control voltage is raised above this range, the module regulates at its set-point voltage. The feature allows the output voltage to rise simultaneously with other modules powered from the same input bus. If unused, this input should be connected to V_I. NOTE: Due to the undervoltage lockout feature, the output of the module cannot follow its own input voltage during power up. For more information, see the related application note.
TurboTrans™	8	This input pin adjusts the transient response of the regulator. To activate the TurboTrans feature, a 1%, 0.05 W resistor must be connected between this pin and pin 5 (+Sense) very close to the module. For a given value of output capacitance, a reduction in peak output voltage deviation is achieved by using this feature. If unused, this pin must be left open-circuit. The resistance requirement can be selected from the TurboTrans resistor table in the Application Information section. External capacitance must never be connected to this pin unless the TurboTrans resistor is a short, 0Ω.
SmartSync	1	This input pin sychronizes the switching frequency of the module to an external clock frequency. The SmartSync feature can be used to sychronize the switching fequency of multiple PTH04T230/231W modules, aiding EMI noise suppression efforts. If unused, this pin should be connected to GND (pin 3). For more information, please review the Application Information section.

(1) Denotes negative logic: Open = Normal operation, Ground = Function active

Copyright © 2006–2009, Texas Instruments Incorporated

TYPICAL CHARACTERISTICS(1)(2)

CHARACTERISTIC DATA (V_I = 5 V)

EFFICIENCY vs OUTPUT CURRENT

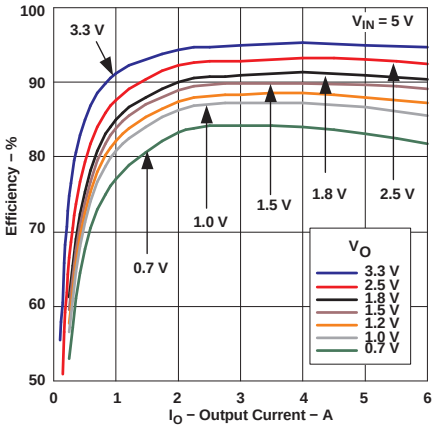

Figure 1.

OUTPUT RIPPLE vs OUTPUT CURRENT

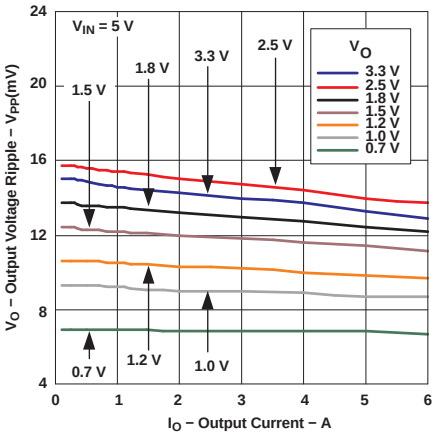

Figure 2.

POWER DISSIPATION vs OUTPUT CURRENT

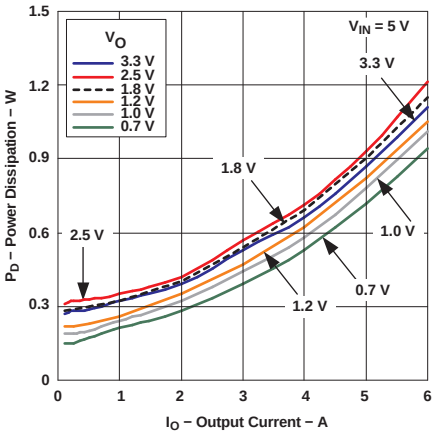

Figure 3.

AMBIENT TEMPERATURE vs OUTPUT CURRENT

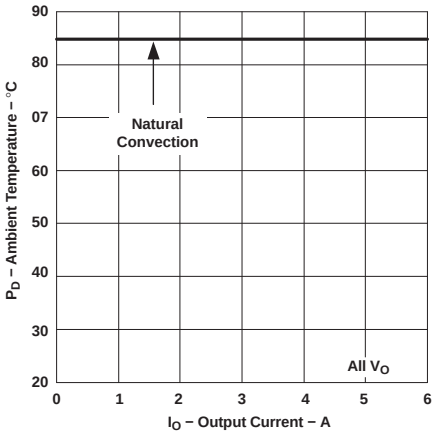

Figure 4.

(1) The electrical characteristic data has been developed from actual products tested at 25C. This data is considered typical for the converter. Applies to Figure 1, Figure 2, and Figure 3.

(2) The temperature derating curves represent the conditions at which internal components are at or below the manufacturer's maximum operating temperatures. Derating limits apply to modules soldered directly to a 100 mm x 100 mm double-sided PCB with 2 oz. copper. Applies to Figure 4.

Copyright © 2006–2009, Texas Instruments Incorporated

TYPICAL CHARACTERISTICS(1)(2)

CHARACTERISTIC DATA (V_I = 3.3 V)

EFFICIENCY vs OUTPUT CURRENT

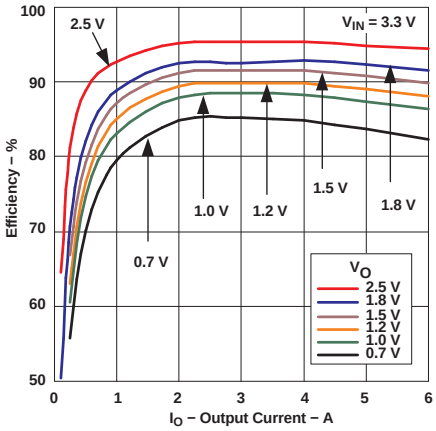

Figure 5.

OUTPUT RIPPLE vs OUTPUT CURRENT

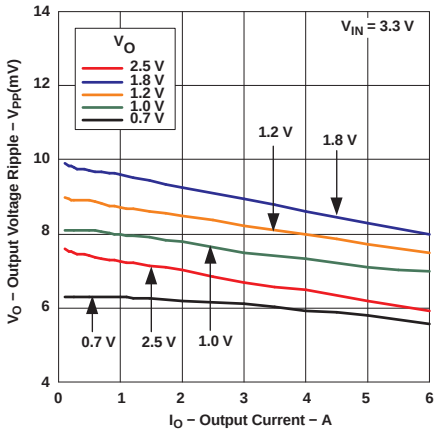

Figure 6.

POWER DISSIPATION vs OUTPUT CURRENT

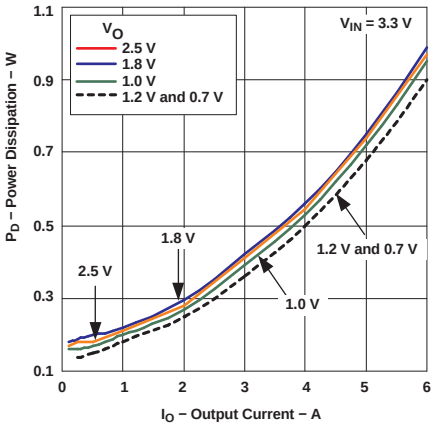

Figure 7.

AMBIENT TEMPERATURE vs OUTPUT CURRENT

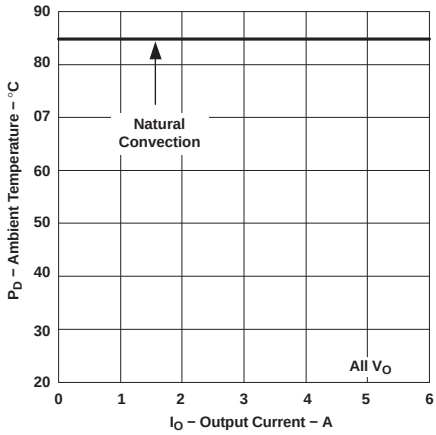

Figure 8.

(1) The electrical characteristic data has been developed from actual products tested at 25C. This data is considered typical for the converter. Applies to Figure 5, Figure 6, and Figure 7.

(2) The temperature derating curves represent the conditions at which internal components are at or below the manufacturer's maximum operating temperatures. Derating limits apply to modules soldered directly to a 100 mm x 100 mm double-sided PCB with 2 oz. copper. Applies to Figure 8.

Copyright © 2006–2009, Texas Instruments Incorporated

APPLICATION INFORMATION

ADJUSTING THE OUTPUT VOLTAGE

The V_O Adjust control (pin 7) sets the output voltage of the PTH04T230/231W. The adjustment range of the PTH04T230/231W is 0.69V to 3.6V. The adjustment method requires the addition of a single external resistor, R_{SET}, that must be connected directly between the V_O Adjust and the –Sense pins. Table 1 gives the standard value of the external resistor for a number of standard voltages, along with the actual output voltage that this resistance value provides.

For other output voltages, the value of the required resistor can either be calculated using the following formula, or simply selected from the range of values given in Table 2. Figure 9 shows the placement of the required resistor.

$$R_{SET} = 10\ k\Omega \times \frac{0.69}{V_O - 0.69} - 1.43\ k\Omega \quad (1)$$

Table 1. Preferred Values of R_{SET} for Standard Output Voltages

V_O (Standard) (V)	R_{SET} (Standard Value) (kΩ)	V_O (Actual) (V)
3.3 (1)	1.21	3.304
2.5 (1)	2.37	2.506
1.8 (1)	4.75	1.807
1.5 (1)	6.98	1.510
1.2	12.1	1.200
1.0	20.5	1.004
0.7	681	0.700

(1) The minimum input voltage is 2.2 V or (V_O + 0.5) V, whichever is greater.

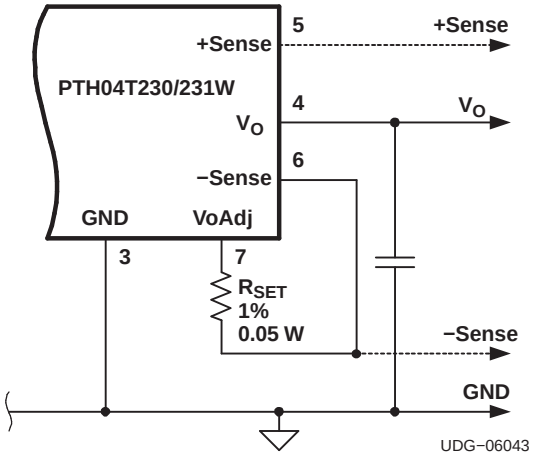

(1) **R_{SET}:** Use a 0.05 W resistor with a tolerance of 1% and temperature stability of 100 ppm/°C (or better). Connect the resistor directly between pins 7 and 6, as close to the regulator as possible, using dedicated PCB traces.

(2) Never connect capacitors from V_O Adjust to either GND, V_O, or +Sense. Any capacitance added to the V_O Adjust pin affects the stability of the regulator.

Figure 9. V_O Adjust Resistor Placement

Copyright © 2006–2009, Texas Instruments Incorporated

Table 2. Output Voltage Set-Point Resistor Values (Standard Values)

V_O Required (V)	R_{SET} (kΩ)	V_O Required (V)	R_{SET} (kΩ)
0.70	681	1.80	4.75
0.75	113	1.85	4.53
0.80	61.9	1.90	4.22
0.85	41.2	1.95	4.02
0.90	31.6	2.00	3.83
0.95	24.9	2.10	3.40
1.00	20.5	2.20	3.09
1.05	17.8	2.30	2.87
1.10	15.4	2.40	2.61
1.15	13.7	2.50	2.37
1.20	12.1	2.60	2.15
1.25	10.7	2.70	2.00
1.30	9.88	2.80	1.82
1.35	9.09	2.90	1.69
1.40	8.25	3.00	1.54
1.45	7.68	3.10	1.43
1.50	6.98	3.20	1.33
1.55	6.49	3.30	1.21
1.60	6.04	3.40	1.13
1.65	5.76	3.50	1.02
1.70	5.36	3.60	0.931
1.75	5.11		

Copyright © 2006–2009, Texas Instruments Incorporated

CAPACITOR RECOMMENDATIONS FOR THE PTH04T230/231W POWER MODULE

Capacitor Technologies

Electrolytic Capacitors

When using electrolytic capacitors, high-quality, computer-grade electrolytic capacitors are recommended. Aluminum electrolytic capacitors provide adequate decoupling over the frequency range of 2 kHz to 150 kHz, and are suitable when ambient temperatures are above -20°C. For operation below -20°C, tantalum, ceramic, or OS-CON type capacitors are required.

Ceramic Capacitors

The performance of aluminum electrolytic capacitors is less effective above 150 kHz. Multilayer ceramic capacitors have a low ESR and a resonant frequency higher than the bandwidth of the regulator. They can be used to reduce the reflected ripple current at the input as well as improve the transient response of the output.

Tantalum, Polymer-Tantalum Capacitors

Tantalum type capacitors may only used on the output bus, and are recommended for applications where the ambient operating temperature is less than 0°C. The AVX TPS series and Kemet capacitor series are suggested over many other tantalum types due to their lower ESR, higher rated surge, power dissipation, and ripple current capability. Tantalum capacitors that have no stated ESR or surge current rating are not recommended for power applications.

Input Capacitor (Required)

The PTH04T231W requires a minimum input capacitance of 300µF of ceramic type.

The PTH04T230W requires a minimum input capacitance of 330µF. The ripple current rating of the electrolytic capacitor must be at least 400mArms. An optional 22-µF X5R/X7R ceramic capacitor is recommended to reduce the RMS ripple current.

Input Capacitor Information

The size and value of the input capacitor is determined by the converter's transient performance capability. This minimum value assumes that the converter is supplied with a responsive, low-inductance input source. This source should have ample capacitive decoupling, and be distributed to the converter via PCB power and ground planes.

Ceramic capacitors should be located as close as possible to the module's input pins, within 0.5 inch (1,3 cm). Adding ceramic capacitance is necessary to reduce the high-frequency ripple voltage at the module's input. This reduces the magnitude of the ripple current through the electroytic capacitor, as well as the amount of ripple current reflected back to the input source. Additional ceramic capacitors can be added to further reduce the RMS ripple current requirement for the electrolytic capacitor.

Increasing the minimum input capacitance to 680-µF is recommended for high-performance applications, or wherever the input source performance is degraded.

The main considerations when selecting input capacitors are the RMS ripple current rating, temperature stability, and maintaining less than 100 mΩ of equivalent series resistance (ESR).

Regular tantalum capacitors are not recommended for the input bus. These capacitors require a recommended minimum voltage rating of 2 × (maximum dc voltage + ac ripple). This is standard practice to ensure reliability. No tantalum capacitors were found to have voltage ratings sufficient to meet this requirement.

When the operating temperature is below 0°C, the ESR of aluminum electrolytic capacitors increases. For these applications, OS-CON, poly-aluminum, and polymer-tantalum types should be considered.

Copyright © 2006–2009, Texas Instruments Incorporated

Output Capacitor (Required)

The PTH04T231W requires a minimum output capacitance of 300µF of ceramic type.

The PTH04T230W requires a minimum 100µF of ceramic and 150 F of non-ceramic output capacitance. Additional non-ceramic, low-ESR capacitance is recommended for improved performance. See data sheet for maximum capacitance limits.

The required capacitance above the minimum is determined by actual transient deviation requirements. See the TurboTrans Technology application section within this document for specific capacitance selection.

Output Capacitor Information

When selecting output capacitors, the main considerations are capacitor type, temperature stability, and ESR. When using the TurboTrans feature, the capacitance X ESR product should also be considered (see the following section).

Ceramic output capacitors added for high-frequency bypassing should be located as close as possible to the load to be effective. Ceramic capacitor values below 10µF should not be included when calculating the total output capacitance value.

When the operating temperature is below 0°C, the ESR of aluminum electrolytic capacitors increases. For these applications, OS-CON, poly-aluminum, and polymer-tantalum types should be considered.

TurboTrans Output Capacitance

TurboTrans allows the designer to optimize the output capacitance according to the system transient design requirement. High quality, ultra-low ESR capacitors are required to maximize TurboTrans effectiveness. When using TurboTrans, the capacitor's capacitance (µF) × ESR (mΩ) product determines its capacitor type; Type A, B, or C. These three types are defined as follows:

Type A = (100 ≤ capacitance × ESR ≤ 1000) (e.g. ceramic)

Type B = (1000 < capacitance × ESR ≤ 5000) (e.g. polymer-tantalum)

Type C = (5000 < capacitance × ESR ≤ 10,000) (e.g. OS-CON)

When using more than one type of output capacitor, select the capacitor type that makes up the majority of the total output capacitance. When calculating the C × ESR product, use the maximum ESR value from the capacitor manufacturer's data sheet.

The PTH04T231W should be used when only Type A (ceramic) capacitors are used on the output.

Working Examples:

A capacitor with a capacitance of 330µF and an ESR of 5mΩ, has a C×ESR product of 1650µFxmΩ (330µF × 5mΩ). This is a Type B capacitor.

A capacitor with a capacitance of 1000µF and an ESR of 8mΩ, has a C×ESR product of 8000µFxmΩ (1000µF × 8mΩ). This is a Type C capacitor.

See the TurboTrans Technology application section within this document for specific capacitance selection.

Table 3 includes a preferred list of capacitors by type and vendor. See the Output Bus / TurboTrans column.

Non-TurboTrans Output Capacitance

If the TurboTrans feature is not used, minimum ESR and maximum capacitor limits must be followed. System stability may be effected and increased output capacitance may be required without TurboTrans.

When using the PTH04T230W without the TurboTrans feature, observe the minimum ESR of the entire output capacitor bank. The minimum ESR limit of the output capacitor bank is 7mΩ. A list of preferred low-ESR type capacitors, are identified in Table 3.

When using the PTH04T231W without the TurboTrans feature, the maximum amount of capacitance is 3000µF of ceramic type. Large amounts of capacitance may reduce system stability.

Utilizing the TurboTrans feature improves system stability, improves transient response, and reduces the amount of output capacitance required to meet system transient design requirements.

Copyright © 2006–2009, Texas Instruments Incorporated

Designing for Fast Load Transients

The transient response of the dc/dc converter has been characterized using a load transient with a di/dt of 2.5A/µs. The typical voltage deviation for this load transient is given in the Electrical Characteristics table using the minimum required value of output capacitance. As the di/dt of a transient is increased, the response of a converter's regulation circuit ultimately depends on its output capacitor decoupling network. This is an inherent limitation with any dc/dc converter once the speed of the transient exceeds its bandwidth capability.

If the target application specifies a higher di/dt or lower voltage deviation, the requirement can only be met with additional low ESR ceramic capacitor decoupling. Generally, with load steps greater than 100A/µs, adding multiple 10-µF ceramic capacitors plus 10×1µF, and numerous high frequency ceramics (≤0.1µF) is all that is required to soften the transient higher frequency edges. The PCB location of these capacitors in relation to the load is critical. DSP, FPGA and ASIC vendors identify types, location and amount of capacitance required for optimum performance. Low impedance buses, unbroken PCB copper planes, and components located as close as possible to the high frequency devices are essential for optimizing transient performance.

Table 3. Input/Output Capacitors(1)

Capacitor Vendor, Type Series (Style)	Capacitor Characteristics					Quantity			Vendor Part No.
	Working Voltage (V)	Value (µF)	Max ESR at 100 kHz (mΩ)	Max Ripple Current at 85°C (Irms) (mA)	Physical Size (mm)	Input Bus	Output Bus (2)		
							No Turbo-Trans	Turbo-Trans Capacitor Type(3)	
Panasonic									
SP series (UE)	6.3	220	15	3000	7,3×4,3	2	1≤ 2	B ≥ 1(3)	EEFUE0J221R
FC (Radial)	6.3	390	117	555	8 X 11,5	1	≥ 1	N/R(4)	EEUFC0J391
FK (SMD)	6.3	470	160	600	10 X 10,2	1	≥ 1	N/R(4)	EEVFK0J471P
United Chemi-Con									
PTB, Poly-Tantalum(SMD)	6.3	330	25	2600	7,3×4,3×2,8	1	1≤3	C ≥ 2(3)	6PTB337MD6TER
LXZ, Aluminum (Radial)	6.3	680	120	555	8 X 12	1	1	N/R(4)	LXZ6.3VB681M8X12LL
PS, Poly-Alum (Radial)	6.3	390	12	4770	8 X 11,5	1	≤1	B ≥ 2(3)	6PS390MH11
PT Poly-Tantalum (SMD)	6.3	330	40	3000	7,3×4,3	1	1	N/R(4)	6PT337MD8TER
MVY, Aluminum SMD)	10	680	150	670	10 × 10	1	1	B ≥ 2(3)	MVY10VC681MJ10TP
PXA, Poly-Alum (Radial)	10 V	330	14	4420	8 × 12,2	1	1≤2	B ≥ 1(3)	PXA10VC331MH12
Nichicon, Aluminum									
WG (SMD)	10	470	150	670	10 × 10	1	1	N/R(4)	UWG1A471MNR1GS
HD (Radial)	10	470	72	760	8 X 11,5	1	1	N/R(4)	UHD1A471MPR
Panasonic, Poly-Aluminum SE Series (SMD)	2.0	560	5	4000	7,3×4,3×4,2	N/R(5)	N/R(6)	B ≥ 2(3)	EEFSE0J561R(V_O≤ 1.6V)(7)

(1) **Capacitor Supplier Verification**
Please verify availability of capacitors identified in this table. Capacitor suppliers may recommend alternative part numbers because of limited availability or obsolete products.
RoHS, Lead-free and Material Details
See the capacitor suppliers regarding material composition, RoHS status, lead-free status, and manufacturing process requirements. Component designators or part number deviations can occur when material composition or soldering requirements are updated.
(2) Additional output capacitance must include the required 100 µF of ceramic type.
(3) Required capacitors with TurboTrans. See the TurboTrans Application information for Capacitor Selection
Capacitor Types:
a. Type A = (100 < capacitance × ESR ≤ 1000)
b. Type B = (1,000 < capacitance × ESR ≤ 5,000)
c. Type C = (5,000 < capacitance × ESR ≤ 10,000)
(4) Aluminum Electrolytic capacitor not recommended for the TurboTrans due to higher ESR × capacitance products. Aluminum and higher ESR capacitors can be used in conjunction with lower ESR capacitance.
(5) N/R – Not recommended. The voltage rating does not meet the minimum operating limits.
(6) N/R – Not recommended. The ESR value of this capacitor is below the required minimum when not using TurboTrans.
(7) The voltage rating of this capacitor only allows it to be used for output voltage that is equal to or less than 80% of the working voltage.

Copyright © 2006–2009, Texas Instruments Incorporated

Table 3. Input/Output Capacitors (continued)

Capacitor Vendor, Type Series (Style)	Capacitor Characteristics					Quantity			Vendor Part No.
	Working Voltage (V)	Value (µF)	Max ESR at 100 kHz (mΩ)	Max Ripple Current at 85°C (Irms) (mA)	Physical Size (mm)	Input Bus	Output Bus (2)		
							No Turbo-Trans	Turbo-Trans Capacitor Type(3)	
Sanyo									
TPE, POSCAP (SMD)	10	330	25	3300	7,3×4,3	1	1 ≤3	C ≥ 1(8)	10TPE330MF
TPE, POSCAP (SMD)	2.5	470	7	4400	7,3×4,3	N/R(9)	≤1	B ≥ 2(8)	2R5TPE470M7(V_O≤ 1.8V)(10)
TPD, POSCAP (SMD)	2.5	1000	5	6100	7,3×4,3	N/R(9)	N/R(11)	B ≥ 1(8)	2R5TPD1000M5(V_O≤ 1.8V)(10)
SEP, OS-CON (Radial)	6.3	470	15	4210	10 × 12	1	1 ≤ 2	C ≥ 1(8)	6SEP470M
SVPA, OS-CON (Radial)	6.3	470	19	4130	10 × 7,9	1	1≤2	C ≥ 2(8)	6SVPA470M
SVP, OS-CON (SMD)	10	330	25	3700	10 × 7,9	1	1 ≤3	C ≥ 1(8)	10SVP330MX
AVX, Tantalum									
TPM Multianode	10	330	23	3000	7,3×4,3×4,1	1	1 ≤ 3	C ≥ 2(8)	TPME337M010R0035
TPS Series III (SMD)	10	330	40	1830	7,3×4,3×4,1	1	1 ≤ 6	N/R(12)	TPSE337M010R0040
TPS Series III (SMD)	4	1000	25	2400	7,3×6,1×3.5	N/R(9)	1 ≤ 5	N/R(12)	TPSV108K004R0035 (V_O≤ 2.1V)(13)
Kemet, Poly-Tantalum									
T520 (SMD)	10	330	25	2600	7,3×4,3×4,1	1	1 ≤ 3	C ≥ 2(8)	T520X337M010ASE025
T530 (SMD)	6.3	330	15	3800	7,3×4,3×4,1	1	1≤2	B ≥ 2(8)	T530X337M010ASE015(10)
T530 (SMD)	4	680	5	7300	7,3×4,3×4,1	N/R(9)	N/R(11)	B ≥ 1(8)	T530X687M004ASE005 (V_O≤ 3.2V)(10)
T530 (SMD)	2.5	1000	5	7300	7,3×4,3×4,1	N/R(9)	N/R(11)	B ≥ 1(8)	T530X108M2R5ASE005 (V_O≤ 2.0V)(10)
Vishay-Sprague									
597D, Tantalum (SMD)	10	330	35	2500	7,3×5,7×4,1	1	1 ≤ 5	N/R(12)	597D337X010E2T
94SP, OS-CON (Radial)	6.3	390	16	3810	8 X 10,5	1	1 ≤2	C ≥ 2(8)	94SP397X06R3EBP
94SVP OS-CON(SMD)	6.3	470	17	3960	8 × 12	1	1≤2	C ≥ 1(8)	94SVP477X06F12
Kemet, Ceramic X5R	6.3	100	2	–	3225	1	1(14)	A(8)	C1210C107M9PAC
(SMD)	6.3	47	2			1	≥2 (14)	A(8)	C1210C476K9PAC
Murata, Ceramic X5R	6.3	100	2	–	3225	1	≥ 1(14)	A(8)	GRM32ER60J107M
(SMD)	6.3	47				1	≥2 (14)	A(8)	GRM32ER60J476ME20L
	16	22				1	≥ 5(14)	A(8)	GRM32ER61CE226KE20L
	16	10				1	≥ 1(14)	A(8)	GRM32DR61C106K
TDK, Ceramic X5R	6.3	100	2	–	3225	1	≥ 1(14)	A(8)	C3225X5R0J107MT
(SMD)	6.3	47				1	≥ 1(14)	A(8)	C3225X5R0J476MT
	16	10				1	≥ 1(14)	A(8)	C3225X5R1C106MT0
	16	22				1	≥ 1(14)	A(8)	C3225X5R1C226MT

(8) Required capacitors with TurboTrans. See the TurboTrans Application information for Capacitor Selection
Capacitor Types:
a. Type A = (100 < capacitance × ESR ≤ 1000)
b. Type B = (1,000 < capacitance × ESR ≤ 5,000)
c. Type C = (5,000 < capacitance × ESR ≤ 10,000)

(9) N/R – Not recommended. The voltage rating does not meet the minimum operating limits.

(10) The voltage rating of this capacitor only allows it to be used for output voltage that is equal to or less than 80% of the working voltage.

(11) N/R – Not recommended. The ESR value of this capacitor is below the required minimum when not using TurboTrans.

(12) Aluminum Electrolytic capacitor not recommended for the TurboTrans due to higher ESR × capacitance products. Aluminum and higher ESR capacitors can be used in conjunction with lower ESR capacitance.

(13) The voltage rating of this capacitor only allows it to be used for output voltage that is equal to or less than 50% of the working voltage.

(14) Any combination of ceramic capacitor values is limited as listed in the Electrical Characteristics table.

Copyright © 2006–2009, Texas Instruments Incorporated

TURBOTRANS

TurboTrans™ Technology

TurboTrans technology is a feature introduced in the T2 generation of the PTH/PTV family of power modules. TurboTrans optimizes the transient response of the regulator with added external capacitance using a single external resistor. Benefits of this technology include reduced output capacitance, minimized output voltage deviation following a load transient, and enhanced stability when using ultra-low ESR output capacitors. The amount of output capacitance required to meet a target output voltage deviation is reduced with TurboTrans activated. Likewise, for a given amount of output capacitance, with TurboTrans engaged, the amplitude of the voltage deviation following a load transient is reduced. Applications requiring tight transient voltage tolerances and minimized capacitor footprint area benefits greatly from this technology.

TurboTrans™ Selection

Using TurboTrans requires connecting a resistor, R_{TT}, between the +Sense pin (pin5) and the TurboTrans pin (pin8). The value of the resistor directly corresponds to the amount of output capacitance required. All T2 products require a minimum value of output capacitance whether or not TurboTrans is used. For the PTH04T230W, the minimum required capacitance is 200µF ceramic. When using TurboTrans, capacitors with a capacitance × ESR product below 10,000 µF×mΩ are required. (Multiply the capacitance (in µF) by the ESR (in mΩ) to determine the capacitance × ESR product.) See the Capacitor Selection section of the datasheet for a variety of capacitors that meet this criteria.

Figure 10 shows the amount of output capacitance required to meet a desired transient voltage deviation with and without TurboTrans for several capacitor types; TypeA (e.g. ceramic), TypeB (e.g. polymer-tantalum), and TypeC (e.g. OS-CON). To calculate the proper value of R_{TT}, first determine the required transient voltage deviation limits and magnitude of the transient load step. Next, determine what type of output capacitors is used. (If more than one type of output capacitor is used, select the capacitor type that makes up the majority of the total output capacitance). Knowing this information, use the chart in Figure 10 that corresponds to the capacitor type selected. To use the chart, begin by dividing the maximum voltage deviation limit (in mV) by the magnitude of the load step (in Amps). This gives a mV/A value. Find this value on the Y-axis of the appropriate chart. Read across the graph to the *'With TurboTrans'* plot. From this point, read down to the X-axis which lists the minimum required capacitance, C_O, to meet that transient voltage deviation. The required R_{TT} resistor value can then be calculated using the equation or selected from the TurboTrans table. The TurboTrans tables include both the required output capacitance and the corresponding R_{TT} values to meet several values of transient voltage deviation for 25%(1.5A), 50%(3A), and 75%(4.5A) output load steps.

The chart can also be used to determine the achievable transient voltage deviation for a given amount of output capacitance. Selecting the amount of output capacitance along the X-axis, reading up to the *'With TurboTrans'* curve, and then over to the Y-axis, gives the transient voltage deviation limit for that value of output capacitance. The required R_{TT} resistor value can be calculated using the equation or selected from the TurboTrans table.

As an example, consider a 5-V application requiring a 45mV deviation during a 3-A, 50% load transient. A majority of 330µF, 10mΩ ouput capacitors are used. Use the Type B capacitor chart, Figure 11. Dividing 45mV by 3A gives 15mV/A transient voltage deviation per amp of transient load step. Select 15mV/A on the Y-axis and read across to the *'With TurboTrans'* plot. Following this point down to the X-axis gives us a minimum required output capacitance of approximately 820µF. The required R_{TT} resistor value for 820µF can then be calculated or selected from Table 5. The required R_{TT} resistor is approximately 6.19kΩ.

To see the benefit of TurboTrans, follow the 15mV/A marking across to the *'Without TurboTrans'* plot. Following that point down shows that you would need a minimum of 2700µF of output capacitance to meet the same transient deviation limit. This is the benefit of TurboTrans. A typical TurboTrans schematic is shown in Figure 16.

Copyright © 2006–2009, Texas Instruments Incorporated

PTH04T231W - Type A Ceramic Capacitors

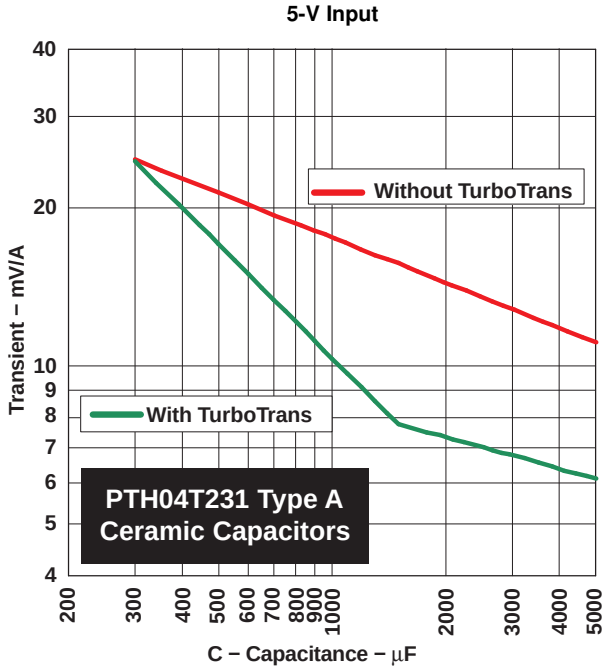

Figure 10. Capacitor Type A, 100 < C(µF) x ESR(mΩ) ≤ 1000
(e.g. Ceramic)

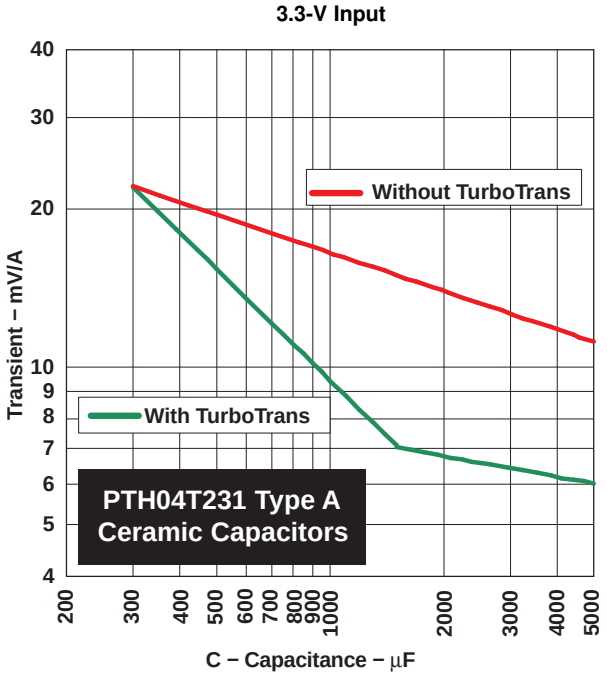

Figure 11. Capacitor Type A, 100 < C(µF) x ESR(mΩ) ≤ 1000
(e.g. Ceramic)

Table 4. Type A TurboTrans C_O Values and Required R_{TT} Selection Table

Transient Voltage Deviation (mV)			5-V Input		3.3-V input	
25% load step (1.5 A)	50% load step (3 A)	75% load step (4.5 A)	C_O Minimum Required Output Capacitance (µF)	R_{TT} Required TurboTrans Resistor (kΩ)	C_O Minimum Required Output Capacitance (µF)	R_{TT} Required TurboTrans Resistor (kΩ)
40	80	120	300	open	300	open
35	70	105	320	549	300	open
30	60	90	400	93.1	350	226
25	50	75	510	37.4	450	59.0
20	40	60	700	15.8	610	22.6
15	30	45	1050	4.75	920	7.50
10	20	30	3300	short	2250	short

R_{TT} Resistor Selection

The TurboTrans resistor value, R_{TT} can be determined from the TurboTrans programming equation:

$$R_{TT} = 40 \times \frac{1 - \left(C_O / 1500\right)}{\left(C_O / 300\right) - 1} \ \text{k}\Omega \quad (2)$$

Where C_O is the total output capacitance in µF. C_O values greater than or equal to 1500 µF require R_{TT} to be a short, 0 Ω.

To ensure stability, a minimum amount of output capacitance is required for a given R_{TT} resistor value. The value of R_{TT} must be calculated using the minimum required output capacitance determined from the capacitor transient response charts above.

Copyright © 2006–2009, Texas Instruments Incorporated

PTH04T230W Type B Capacitors

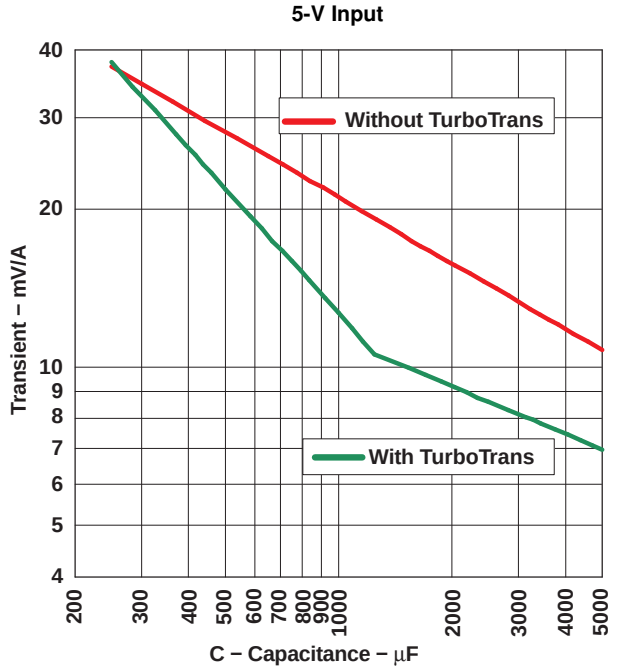

Figure 12. Capacitor Type B, 1000 < C(µF) x ESR(mΩ) ≤ 5000 (e.g. Polymer-Tantalum)

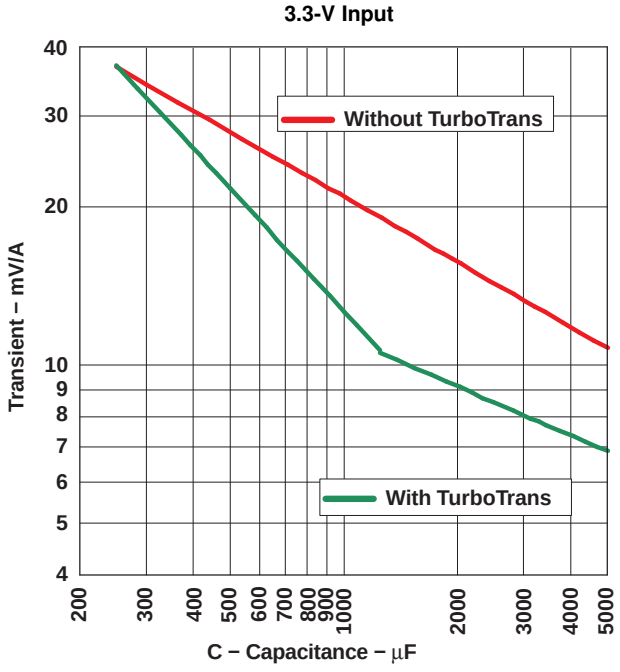

Figure 13. Capacitor Type B, 1000 < C(µF) x ESR(mΩ) ≤ 5000 (e.g. Polymer-Tantalum)

Table 5. Type B TurboTrans C_O Values and Required R_{TT} Selection Table

Transient Voltage Deviation (mV)			5-V Input		3.3-V Input	
25% load step (1.5 A)	50% load step (3 A)	75% load step (4.5 A)	C_O Minimum Required Output Capacitance (µF)	R_{TT} Required TurboTrans Resistor (kΩ)	C_O Minimum Required Output Capacitance (µF)	R_{TT} Required TurboTrans Resistor (kΩ)
60	120	180	250	open	250	open
50	100	150	300	165	300	165
40	80	120	400	46.4	400	46.4
30	60	90	570	16.9	570	16.9
25	50	75	710	9.31	720	9.09
20	40	60	940	3.57	960	3.24
15	30	45	1520	short	1500	short
12	24	36	3200	short	3100	short

R_{TT} Resistor Selection

The TurboTrans resistor value, R_{TT} can be determined from the TurboTrans programming equation:

$$R_{TT} = 40 \times \frac{1 - \left(C_O / 1250\right)}{\left(C_O / 250\right) - 1} \ k\Omega \quad (3)$$

Where C_O is the total output capacitance in µF. C_O values greater than or equal to 1250 µF require R_{TT} to be a short, 0 Ω.

To ensure stability, a minimum amount of output capacitance is required for a given R_{TT} resistor value. The value of R_{TT} must be calculated using the minimum required output capacitance determined from the capacitor transient response charts above.

Copyright © 2006–2009, Texas Instruments Incorporated

PTH04T230W Type C Capacitors

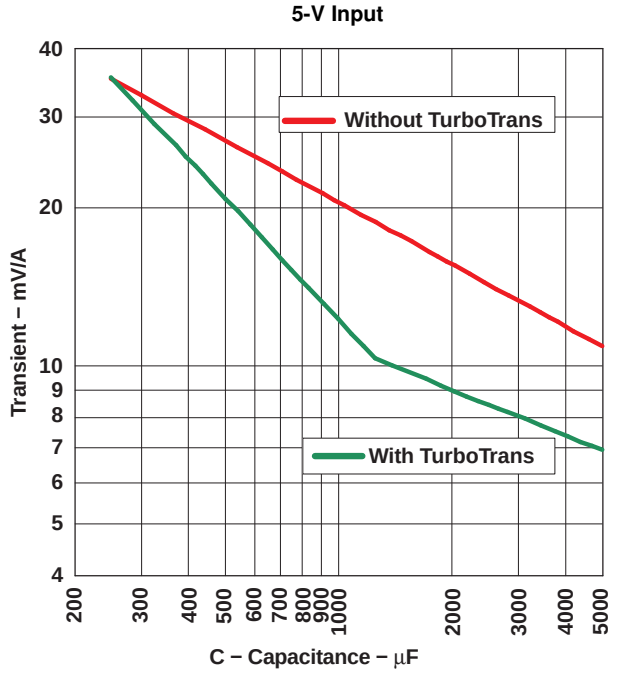

Figure 14. Capacitor Type C, 5000 < C(µF) x ESR(mΩ) ≤ 10,000 (e.g. OS-CON)

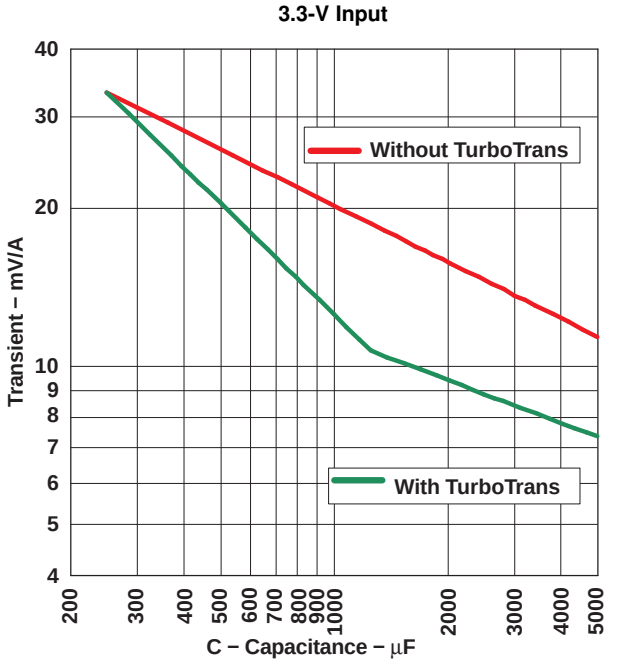

Figure 15. Capacitor Type C, 5000 < C(µF) x ESR(mΩ) ≤ 10,000 (e.g. OS-CON)

Table 6. Type C TurboTrans C_O Values and Required R_{TT} Selection Table

Transient Voltage Deviation (mV)			5-V Input		3.3 V Input	
25% load step (1.5 A)	50% load step (3 A)	75% load step (4.5 A)	C_O Minimum Required Output Capacitance (µF)	R_{TT} Required TurboTrans Resistor (kΩ)	C_O Minimum Required Output Capacitance (µF)	R_{TT} Required TurboTrans Resistor (kΩ)
50	100	150	270	487	250	open
40	80	120	360	66.5	350	76.8
35	70	105	430	36.5	420	39.2
30	60	90	520	21.5	520	21.5
25	50	75	660	11.5	670	11.0
20	40	60	890	4.53	920	3.83
15	30	45	1420	short	1630	short
12	20	30	3050	short	3700	short

R_{TT} Resistor Selection

The TurboTrans resistor value, R_{TT} can be determined from the TurboTrans programming equation:

$$R_{TT} = 40 \times \frac{1 - \left(C_O / 1250\right)}{\left(C_O / 250\right) - 1} \quad k\Omega \tag{4}$$

Where C_O is the total output capacitance in µF. C_O values greater than or equal to 1250 µF require R_{TT} to be a short, 0 Ω.

To ensure stability, a minimum amount of output capacitance is required for a given R_{TT} resistor value. The value of R_{TT} must be calculated using the minimum required output capacitance determined from the capacitor transient response charts above.

Copyright © 2006–2009, Texas Instruments Incorporated

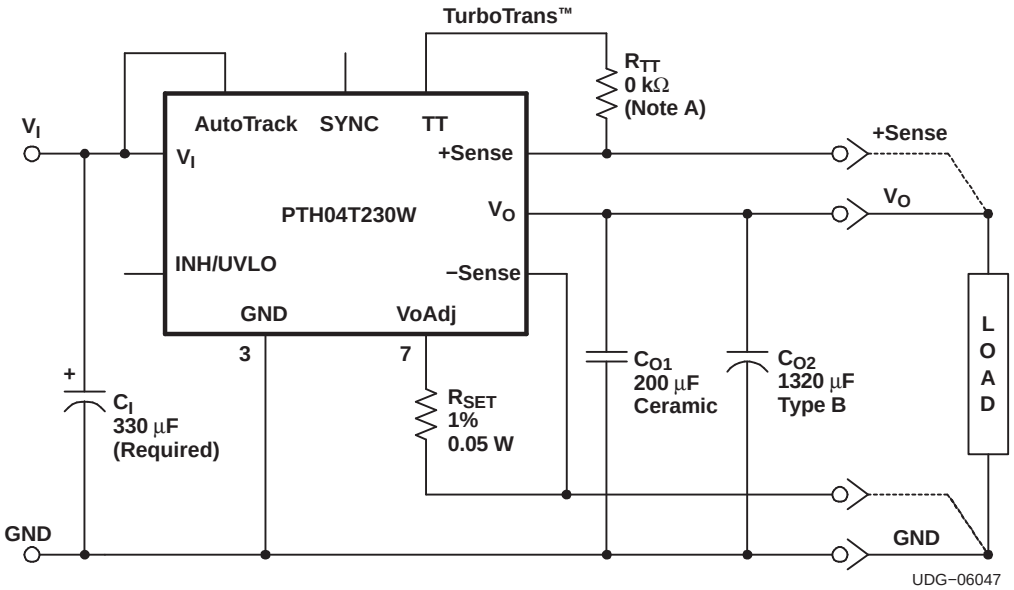

A. The value of R_{TT} must be calculated using the total value of output capacitance.

Figure 16. Typical TurboTrans™ Schematic

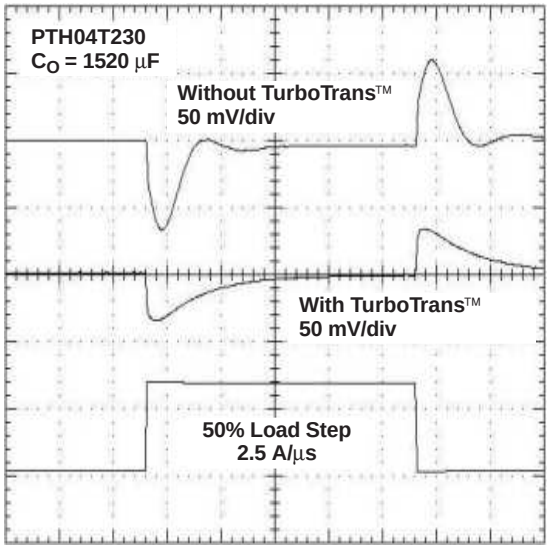

Figure 17. Typical TurboTrans Waveforms

UNDERVOLTAGE LOCKOUT (UVLO)

The PTH04T230/231W power modules incorporate an input undervoltage lockout (UVLO). The UVLO feature prevents the operation of the module until there is sufficient input voltage to produce a valid output voltage. This enables the module to provide a clean, monotonic power-up for the load circuit, and also limits the magnitude of current drawn from the regulator's input source during the power-up sequence.

The UVLO characteristic is defined by the ON threshold (V_{THD}) voltage. Below the *ON* threshold, the Inhibit control is overridden, and the module does not produce an output. The hysteresis voltage, which is the difference between the *ON* and *OFF* threshold voltages, is set at 500 mV. The hysteresis prevents start-up oscillations, which can occur if the input voltage droops slightly when the module begins drawing current from the input source.

The UVLO feature of the PTH04T230/231W module allows for limited adjustment of the *ON* threshold voltage. The adjustment is made via the *Inhbit/UVLO Prog* control pin (pin 10) using a single resistor (see figure below). When pin 10 is left open circuit, the *ON* threshold voltage is internally set to its default value, which is 1.95 volts. The *ON* threshold might need to be raised if the module is powered from a tightly regulated 5-V bus. Adjusting the threshold prevents the module from operating if the input bus fails to completely rise to its specified regulation voltage.

Equation 5 determines the value of R_{UVLO} required to adjust V_{THD} to a new value. The default value is 1.95 V, and it may only be adjusted to a higher value.

$$R_{UVLO} = \frac{68.54 - V_{THD}}{V_{THD} - 2.07} \ k\Omega \quad (5)$$

Table 7 lists the standard resistor values for R_{UVLO} for different values of the ON-threshold (V_{THD}) voltage.

Table 7. Standard R_{UVLO} Values for Various V_{THD} Values

V_{THD} (V)	2.5	3.0	3.5	4.0	4.5
R_{UVLO} (kΩ)	154	71.5	53.6	33.2	26.7

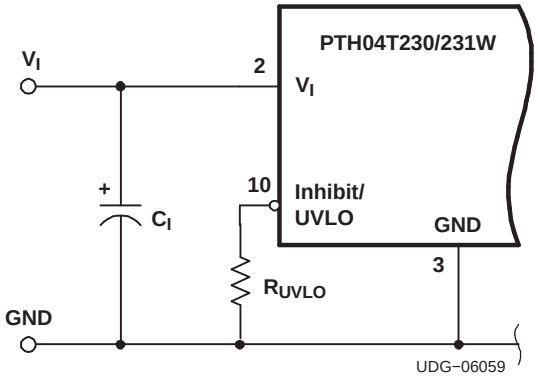

Figure 18. Undervoltage Lockout

Copyright © 2006–2009, Texas Instruments Incorporated

Soft-Start Power Up

The Auto-Track feature allows the power-up of multiple PTH/PTV modules to be directly controlled from the Track pin. However in a stand-alone configuration, or when the Auto-Track feature is not being used, the Track pin should be directly connected to the input voltage, V_I (see Figure 19).

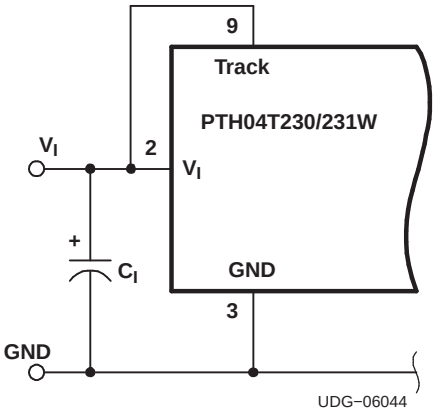

Figure 19. Defeating the Auto-Track Function

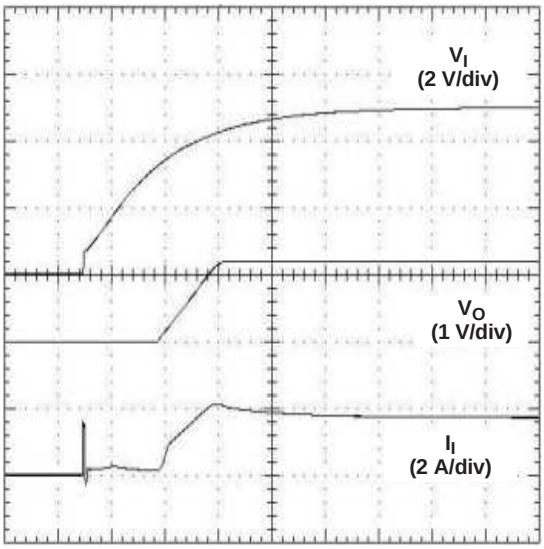

Figure 20. Power-Up Waveform

When the Track pin is connected to the input voltage the Auto-Track function is permanently disengaged. This allows the module to power up entirely under the control of its internal soft-start circuitry. When power up is under soft-start control, the output voltage rises to the set-point at a quicker and more linear rate. From the moment a valid input voltage is applied, the soft-start control introduces a short time delay (typically 2ms–10ms) before allowing the output voltage to rise. The output then progressively rises to the module's setpoint voltage.

Figure 20 shows the soft-start power-up characteristic of the PTH04T230/231W operating from a 5-V input bus and configured for a 1.8-V output. The waveforms were measured with a 6-A constant current load and the Auto-Track feature disabled. The initial rise in input current when the input voltage first starts to rise is the charge current drawn by the input capacitors. Power-up is complete within 20 ms.

Remote Sense

Differential remote sense improves the load regulation performance of the module by allowing it to compensate for any IR voltage drop between its output and the load in either the positive or return path. An IR drop is caused by the output current flowing through the small amount of pin and trace resistance. Connecting the +Sense (pin 5) and –Sense (pin 6) pins to the respective positive and ground reference of the load terminals improves the load regulation of the output voltage at the connection points.

With the sense pins connected at the load, the difference between the voltage measured directly between the V_O and GND pins, and that measured at the Sense pins, is the amount of IR drop being compensated by the regulator. This should be limited to a maximum of 300mV.

If the remote sense feature is not used at the load, connect the +Sense pin to V_O (pin4) and connect the –Sense pin to the module GND (pin 3).

The remote sense feature is not designed to compensate for the forward drop of nonlinear or frequency dependent components that may be placed in series with the converter output. Examples include OR-ing diodes, filter inductors, ferrite beads, and fuses. When these components are enclosed by the remote sense connection they are effectively placed inside the regulation control loop, which can adversely affect the stability of the regulator.

Copyright © 2006–2009, Texas Instruments Incorporated

Output On/Off Inhibit

For applications requiring output voltage on/off control, the PTH04T230/231W incorporates an output Inhibit control pin. The inhibit feature can be used wherever there is a requirement for the output voltage from the regulator to be turned off.

The power modules function normally when the Inhibit pin is left open-circuit, providing a regulated output whenever a valid source voltage is connected to V_I with respect to GND.

Figure 21 shows the typical application of the inhibit function. Note the discrete transistor (Q1). The Inhibit input has its own internal pull-up. An external pull-up should never be connected to the inhibit pin. The input is not compatible with TTL logic devices. An open-collector (or open-drain) discrete transistor is recommended for control.

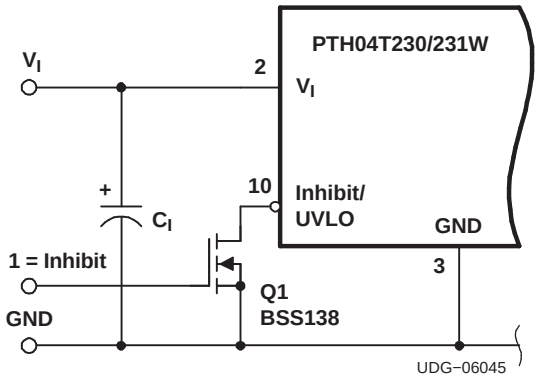

Figure 21. On/Off Inhibit Control Circuit

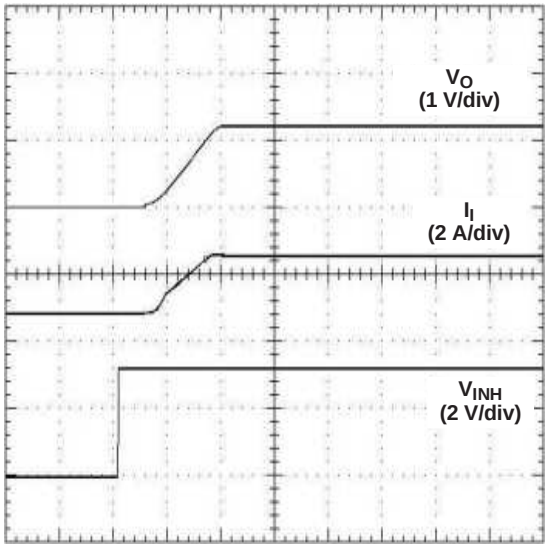

Figure 22. Power-Up Response from Inhibit Control

Turning Q1 on applies a low voltage to the Inhibit control pin and disables the output of the module. If Q1 is then turned off, the module executes a soft-start power-up sequence. A regulated output voltage is produced within 40 ms. Figure 22 shows the typical rise in both the output voltage and input current, following the turn-off of Q1. The turn off of Q1 corresponds to the rise in the waveform, V_{INH}. The waveforms were measured with a 3-A constant current load.

Overcurrent Protection

For protection against load faults, all modules incorporate output overcurrent protection. Applying a load that exceeds the regulator's overcurrent threshold causes the regulated output to shut down. Following shutdown, a module periodically attempts to recover by initiating a soft-start power-up. This is described as a *hiccup* mode of operation, whereby the module continues in a cycle of successive shutdown and power up until the load fault is removed. During this period, the average current flowing into the fault is significantly reduced. Once the fault is removed, the module automatically recovers and returns to normal operation.

Copyright © 2006–2009, Texas Instruments Incorporated

Overtemperature Protection (OTP)

A thermal shutdown mechanism protects the module's internal circuitry against excessively high temperatures. A rise in the internal temperature may be the result of a drop in airflow, or a high ambient temperature. If the internal temperature exceeds the OTP threshold, the module's Inhibit control is internally pulled low. This turns the output off. The output voltage drops as the external output capacitors are discharged by the load circuit. The recovery is automatic, and begins with a soft-start power up. It occurs when the sensed temperature decreases by about 10°C below the trip point.

The overtemperature protection is a last resort mechanism to prevent thermal stress to the regulator. Operation at or close to the thermal shutdown temperature is not recommended and reduces the long-term reliability of the module. Always operate the regulator within the specified safe operating area (SOA) limits for the worst-case conditions of ambient temperature and airflow.

Smart Sync

Smart Sync is a feature that allows multiple power modules to be synchronized to a common frequency. Driving the Smart Sync pins with an external oscillator set to the desired frequency, synchronizes all connected modules to the selected frequency. The synchronization frequency can be higher or lower than the nominal switching frequency of the modules within the range of 240 kHz to 400 kHz (see Electrical Specifications table for frequency limits). Synchronizing modules powered from the same bus eliminates beat frequencies reflected back to the input supply, and also reduces EMI filtering requirements. These are the benefits of Smart Sync. Power modules can also be synchronized out of phase to minimize source current loading and minimize input capacitance requirements. Figure 23 shows a standard circuit with two modules syncronized 180° out of phase using a D flip-flop.

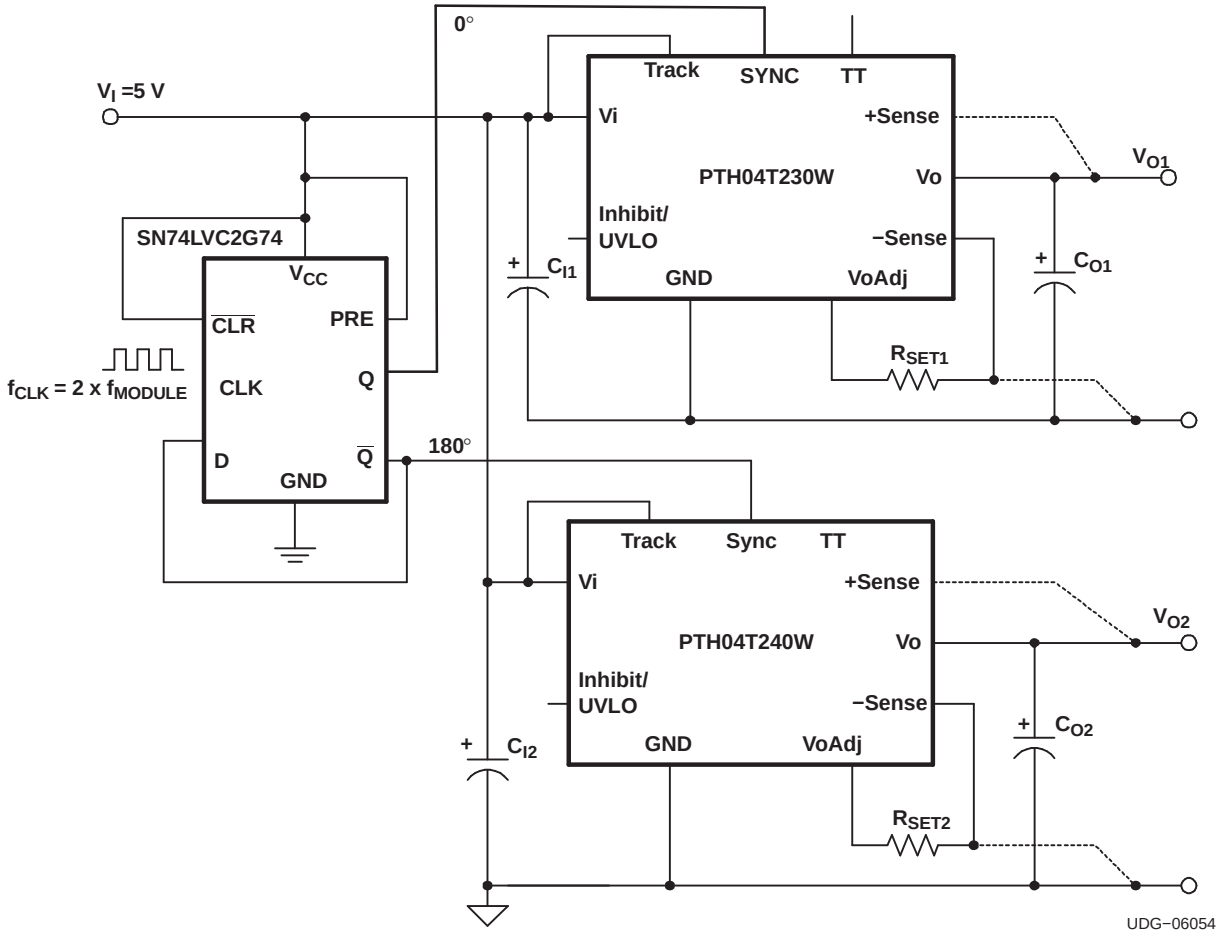

Figure 23. Typical SmartSync Circuit

Auto-Track™ Function

The Auto-Track function is unique to the PTH/PTV family, and is available with all POLA products. Auto-Track was designed to simplify the amount of circuitry required to make the output voltage from each module power up and power down in sequence. The sequencing of two or more supply voltages during power up is a common requirement for complex mixed-signal applications that use dual-voltage VLSI ICs such as the TMS320™ DSP family, microprocessors, and ASICs.

How Auto-Track™ Works

Auto-Track works by forcing the module output voltage to follow a voltage presented at the *Track* control pin (1). This control range is limited to between 0 V and the module set-point voltage. Once the track-pin voltage is raised above the set-point voltage, the module output remains at its set-point (2). As an example, if the *Track* pin of a 2.5-V regulator is at 1 V, the regulated output is 1 V. If the voltage at the *Track* pin rises to 3 V, the regulated output does not go higher than 2.5 V.

When under Auto-Track control, the regulated output from the module follows the voltage at its *Track* pin on a volt-for-volt basis. By connecting the *Track* pin of a number of these modules together, the output voltages follow a common signal during power up and power down. The control signal can be an externally generated master ramp waveform, or the output voltage from another power supply circuit (3). For convenience, the *Track* input incorporates an internal RC-charge circuit. This operates off the module input voltage to produce a suitable rising waveform at power up.

Typical Application

The basic implementation of Auto-Track allows for simultaneous voltage sequencing of a number of Auto-Track compliant modules. Connecting the *Track* inputs of two or more modules forces their track input to follow the same collective RC-ramp waveform, and allows their power-up sequence to be coordinated from a common Track control signal. This can be an open-collector (or open-drain) device, such as a power-up reset voltage supervisor IC. See U3 in Figure 24.

To coordinate a power-up sequence, the Track control must first be pulled to ground potential. This should be done at or before input power is applied to the modules. The ground signal should be maintained for at least 20 ms after input power has been applied. This brief period gives the modules time to complete their internal soft-start initialization (4), enabling them to produce an output voltage. A low-cost supply voltage supervisor IC, that includes a built-in time delay, is an ideal component for automatically controlling the Track inputs at power up.

Figure 24 shows how a TPS3808 supply voltage supervisor IC (U3) can be used to coordinate the sequenced power up of 5-V PTH modules. The output of the TPS3808 supervisor becomes active above an input voltage of 0.8 V, enabling it to assert a ground signal to the common track control well before the input voltage has reached the module's undervoltage lockout threshold. The ground signal is maintained until approximately 27ms after the input voltage has risen above U3's voltage threshold, which is 4.65V. The 27-ms time period is controlled by the capacitor C3. The value of 4700pF provides sufficient time delay for the modules to complete their internal soft-start initialization. The output voltage of each module remains at zero until the track control voltage is allowed to rise. When U3 removes the ground signal, the track control voltage automatically rises. This causes the output voltage of each module to rise simultaneously with the other modules, until each reaches its respective set-point voltage.

Figure 25 shows the output voltage waveforms after input voltage is applied to the circuit. The waveforms, V_O1 and V_O2, represent the output voltages from the two power modules, U1 (3.3 V) and U2 (1.8 V), respectively. V_{TRK}, V_O1, and V_O2 are shown rising together to produce the desired simultaneous power-up characteristic.

The same circuit also provides a power-down sequence. When the input voltage falls below U3's voltage threshold, the ground signal is re-applied to the common track control. This pulls the track inputs to zero volts, forcing the output of each module to follow, as shown in Figure 26. Power down is normally complete before the input voltage has fallen below the modules' undervoltage lockout. This is an important constraint. Once the modules recognize that an input voltage is no longer present, their outputs can no longer follow the voltage applied at their track input. During a power-down sequence, the fall in the output voltage from the modules is limited by the Auto-Track slew rate capability.

Copyright © 2006–2009, Texas Instruments Incorporated

Notes on Use of Auto-Track™

1. The *Track* pin voltage must be allowed to rise above the module set-point voltage before the module regulates at its adjusted set-point voltage.
2. The Auto-Track function tracks almost any voltage ramp during power up, and is compatible with ramp speeds of up to 1 V/ms.
3. The absolute maximum voltage that may be applied to the *Track* pin is the input voltage V_I.
4. The module cannot follow a voltage at its track control input until it has completed its soft-start initialization. This takes about 20 ms from the time that a valid voltage has been applied to its input. During this period, it is recommended that the *Track* pin be held at ground potential.
5. The Auto-Track function is disabled by connecting the *Track* pin to the input voltage (V_I). When Auto-Track is disabled, the output voltage rises at a quicker and more linear rate after input power has been applied.

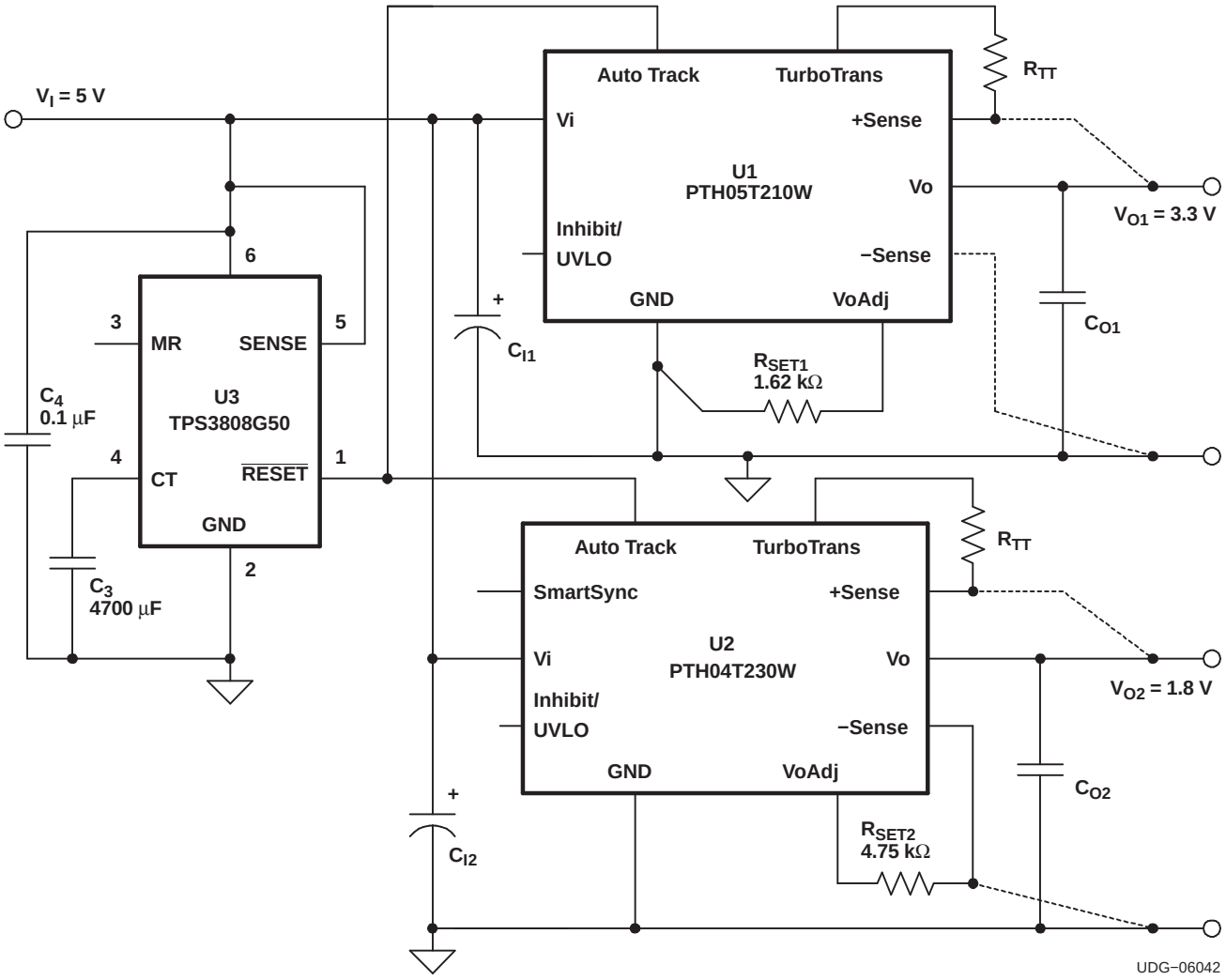

Figure 24. Sequenced Power Up and Power Down Using Auto-Track

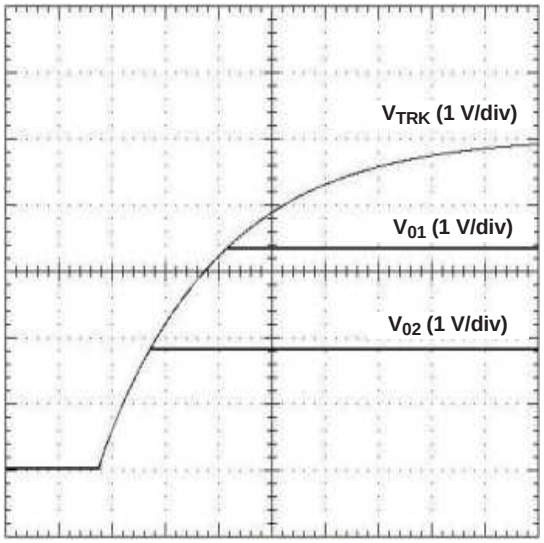

Figure 25. Simultaneous Power Up With Auto-Track Control

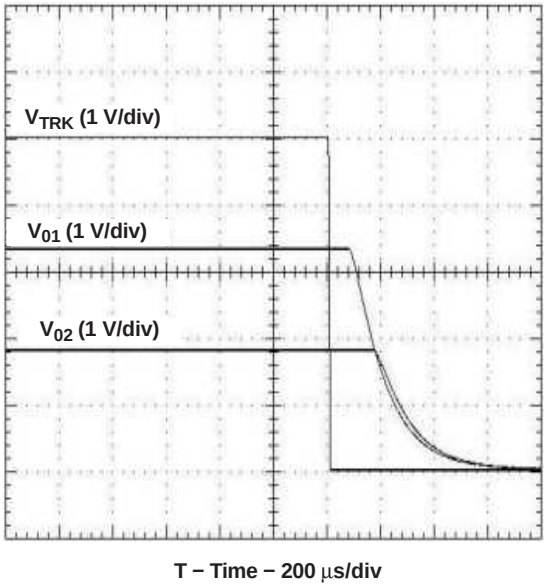

Figure 26. Simultaneous Power Down With Auto-Track Control

Prebias Startup Capability

A prebias startup condition occurs as a result of an external voltage being present at the output of a power module prior to its output becoming active. This often occurs in complex digital systems when current from another power source is backfed through a dual-supply logic component, such as an FPGA or ASIC. Another path might be via clamp diodes as part of a dual-supply power-up sequencing arrangement. A prebias can cause problems with power modules that incorporate synchronous rectifiers. This is because under most operating conditions, these types of modules can sink as well as source output current.

The PTH family of power modules incorporate synchronous rectifiers, but does not sink current during startup(1), or whenever the Inhibit pin is held low. However, to ensure satisfactory operation of this function, certain conditions must be maintained(2). Figure 27 shows an application demonstrating the prebias startup capability. The startup waveforms are shown in Figure 28. Note that the output current (I_O) is negligible until the output voltage rises above the voltage backfed through the intrinsic diodes.

The prebias start-up feature is not compatible with Auto-Track. When the module is under Auto-Track control, it sinks current if the output voltage is below that of a back-feeding source. To ensure a pre-bias hold-off one of two approaches must be followed when input power is applied to the module. The Auto-Track function must either be disabled(3), or the module's output held off (for at least 50 ms) using the Inhibit pin. Either approach ensures that the Track pin voltage is above the set-point voltage at start up.

1. Startup includes the short delay (approximately 10 ms) prior to the output voltage rising, followed by the rise of the output voltage under the module's internal soft-start control. Startup is complete when the output voltage has risen to either the set-point voltage or the voltage at the Track pin, whichever is lowest.
2. To ensure that the regulator does not sink current when power is first applied (even with a ground signal applied to the Inhibit control pin), the input voltage must always be greater than the output voltage *throughout* the power-up and power-down sequence.
3. The Auto-Track function can be disabled at power up by immediately applying a voltage to the module's Track pin that is greater than its set-point voltage. This can be easily accomplished by connecting the Track pin to V_I.

Copyright © 2006–2009, Texas Instruments Incorporated

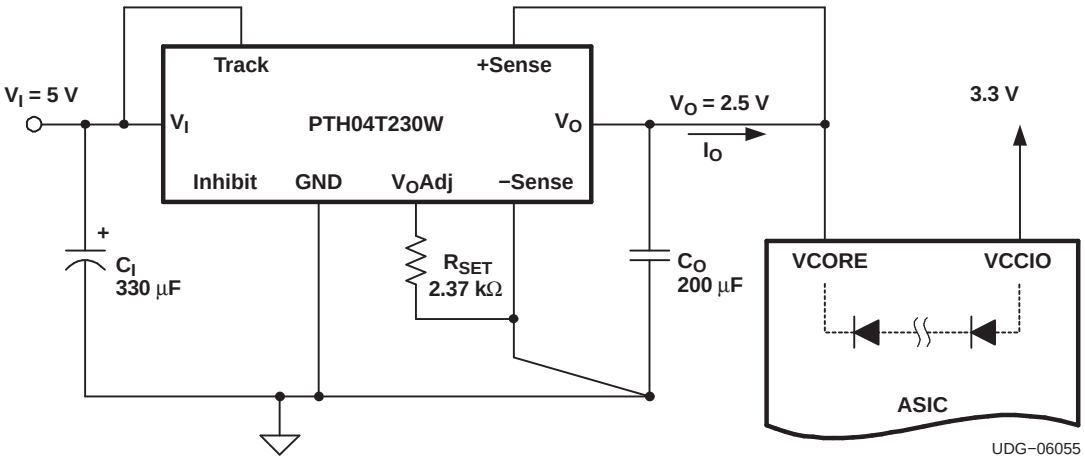

Figure 27. Application Circuit Demonstrating Prebias Startup

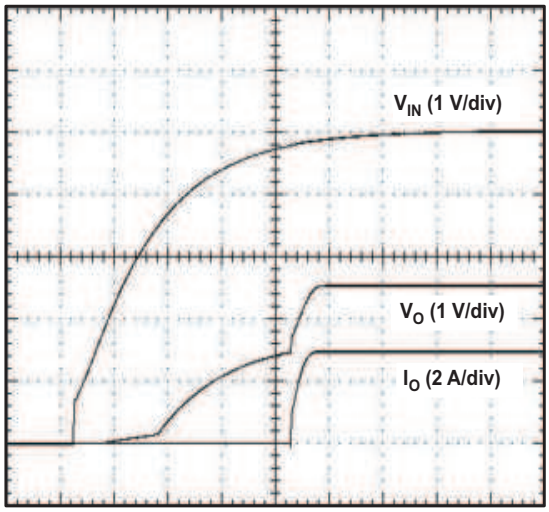

Figure 28. Prebias Startup Waveforms

TAPE AND REEL & TRAY DRAWINGS

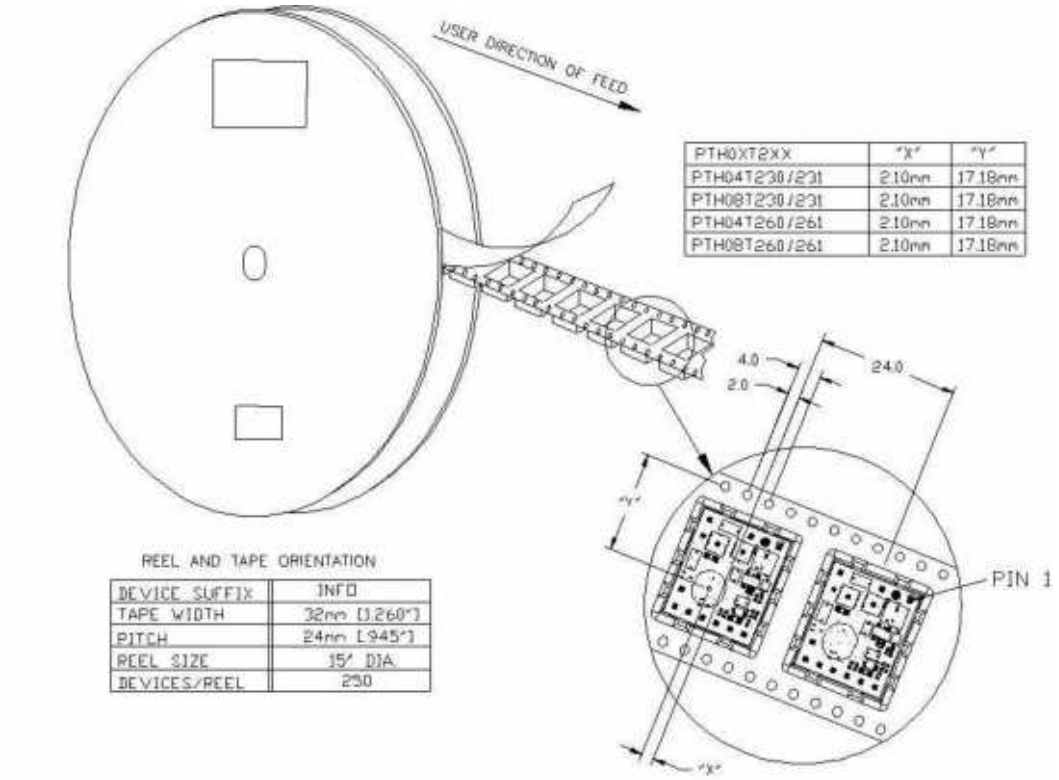

PTH0XT2XX	"X"	"Y"
PTH04T230/231	2.10mm	17.18mm
PTH08T230/231	2.10mm	17.18mm
PTH04T260/261	2.10mm	17.18mm
PTH08T260/261	2.10mm	17.18mm

REEL AND TAPE ORIENTATION

DEVICE SUFFIX	INFO
TAPE WIDTH	32mm [1.260"]
PITCH	24mm [.945"]
REEL SIZE	15" DIA
DEVICES/REEL	250

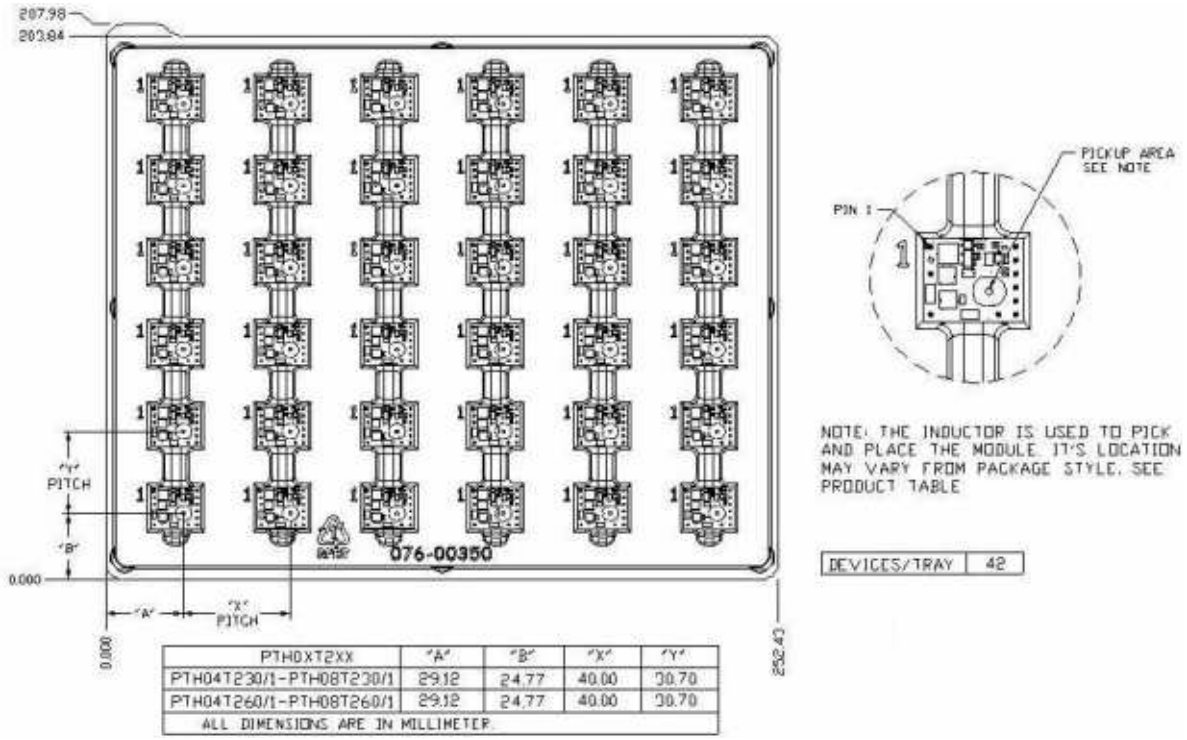

PTH0XT2XX	"A"	"B"	"X"	"Y"
PTH04T230/1-PTH08T230/1	29.12	24.77	40.00	30.70
PTH04T260/1-PTH08T260/1	29.12	24.77	40.00	30.70
ALL DIMENSIONS ARE IN MILLIMETER				

DEVICES/TRAY	42

Copyright © 2006–2009, Texas Instruments Incorporated

PACKAGING INFORMATION

Orderable Device	Status (1)	Package Type	Package Drawing	Pins	Package Qty	Eco Plan (2)	Lead/ Ball Finish	MSL Peak Temp (3)	Samples (Requires Login)
PTH04T230WAD	ACTIVE	Through-Hole Module	ECL	10	36	Pb-Free (RoHS)	SN	N / A for Pkg Type	Request Free Samples
PTH04T230WAS	ACTIVE	Surface Mount Module	ECM	10	36	TBD	SNPB	Level-1-235C-UNLIM/ Level-3-260C-168HRS	Request Free Samples
PTH04T230WAST	ACTIVE	Surface Mount Module	ECM	10	250	TBD	SNPB	Level-1-235C-UNLIM/ Level-3-260C-168HRS	Purchase Samples
PTH04T230WAZ	ACTIVE	Surface Mount Module	BCM	10	36	Pb-Free (RoHS)	SNAGCU	Level-3-260C-168 HR	Request Free Samples
PTH04T230WAZT	ACTIVE	Surface Mount Module	BCM	10	250	Pb-Free (RoHS)	SNAGCU	Level-3-260C-168 HR	Purchase Samples
PTH04T231WAD	ACTIVE	Through-Hole Module	ECL	10	36	Pb-Free (RoHS)	SN	N / A for Pkg Type	Request Free Samples
PTH04T231WAS	ACTIVE	Surface Mount Module	ECM	10	36	TBD	SNPB	Level-1-235C-UNLIM/ Level-3-260C-168HRS	Request Free Samples
PTH04T231WAST	ACTIVE	Surface Mount Module	ECM	10	250	TBD	SNPB	Level-1-235C-UNLIM/ Level-3-260C-168HRS	Purchase Samples
PTH04T231WAZ	ACTIVE	Surface Mount Module	BCM	10	36	Pb-Free (RoHS)	SNAGCU	Level-3-260C-168 HR	Request Free Samples
PTH04T231WAZT	ACTIVE	Surface Mount Module	BCM	10	250	Pb-Free (RoHS)	SNAGCU	Level-3-260C-168 HR	Purchase Samples

(1) The marketing status values are defined as follows:
ACTIVE: Product device recommended for new designs.
LIFEBUY: TI has announced that the device will be discontinued, and a lifetime-buy period is in effect.
NRND: Not recommended for new designs. Device is in production to support existing customers, but TI does not recommend using this part in a new design.
PREVIEW: Device has been announced but is not in production. Samples may or may not be available.
OBSOLETE: TI has discontinued the production of the device.

(2) Eco Plan - The planned eco-friendly classification: Pb-Free (RoHS), Pb-Free (RoHS Exempt), or Green (RoHS & no Sb/Br) - please check http://www.ti.com/productcontent for the latest availability information and additional product content details.
TBD: The Pb-Free/Green conversion plan has not been defined.
Pb-Free (RoHS): TI's terms "Lead-Free" or "Pb-Free" mean semiconductor products that are compatible with the current RoHS requirements for all 6 substances, including the requirement that lead not exceed 0.1% by weight in homogeneous materials. Where designed to be soldered at high temperatures, TI Pb-Free products are suitable for use in specified lead-free processes.
Pb-Free (RoHS Exempt): This component has a RoHS exemption for either 1) lead-based flip-chip solder bumps used between the die and package, or 2) lead-based die adhesive used between the die and leadframe. The component is otherwise considered Pb-Free (RoHS compatible) as defined above.

Green (RoHS & no Sb/Br): TI defines "Green" to mean Pb-Free (RoHS compatible), and free of Bromine (Br) and Antimony (Sb) based flame retardants (Br or Sb do not exceed 0.1% by weight in homogeneous material)

(3) MSL, Peak Temp. -- The Moisture Sensitivity Level rating according to the JEDEC industry standard classifications, and peak solder temperature.

Important Information and Disclaimer: The information provided on this page represents TI's knowledge and belief as of the date that it is provided. TI bases its knowledge and belief on information provided by third parties, and makes no representation or warranty as to the accuracy of such information. Efforts are underway to better integrate information from third parties. TI has taken and continues to take reasonable steps to provide representative and accurate information but may not have conducted destructive testing or chemical analysis on incoming materials and chemicals. TI and TI suppliers consider certain information to be proprietary, and thus CAS numbers and other limited information may not be available for release.

In no event shall TI's liability arising out of such information exceed the total purchase price of the TI part(s) at issue in this document sold by TI to Customer on an annual basis.

ECL (R–PDSS–T10) DOUBLE SIDED MODULE

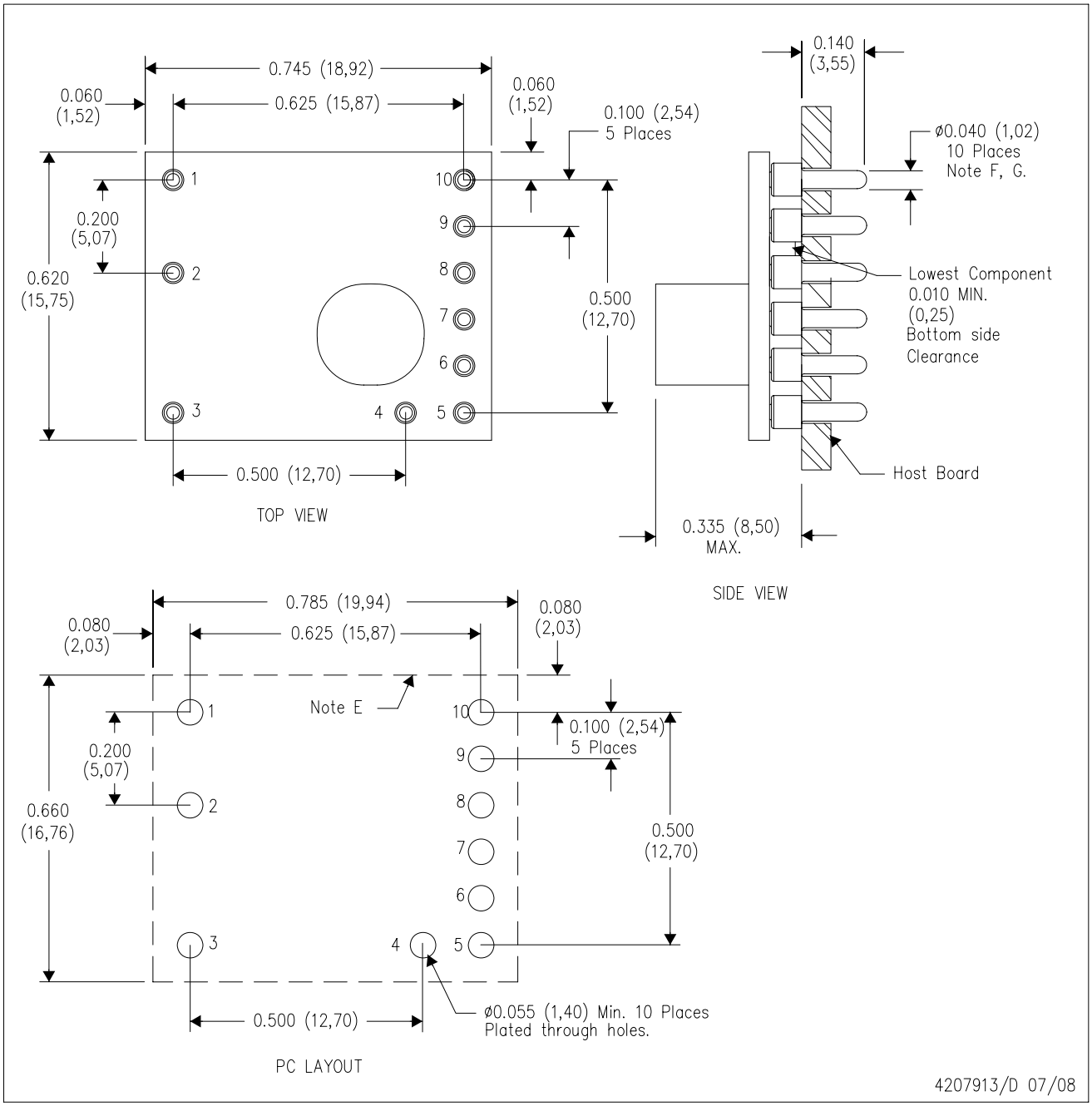

NOTES:
A. All linear dimensions are in inches (mm).
B. This drawing is subject to change without notice.
C. 2 place decimals are ±0.030 (±0,76mm).
D. 3 place decimals are ±0.010 (±0,25mm).
E. Recommended keep out area for user components.
F. Pins are 0.040" (1,02) diameter with 0.070" (1,78) diameter standoff shoulder.
G. All pins: Material – Copper Alloy
Finish – Tin (100%) over Nickel plate

ECM (R–PDSS–B10) DOUBLE SIDED MODULE

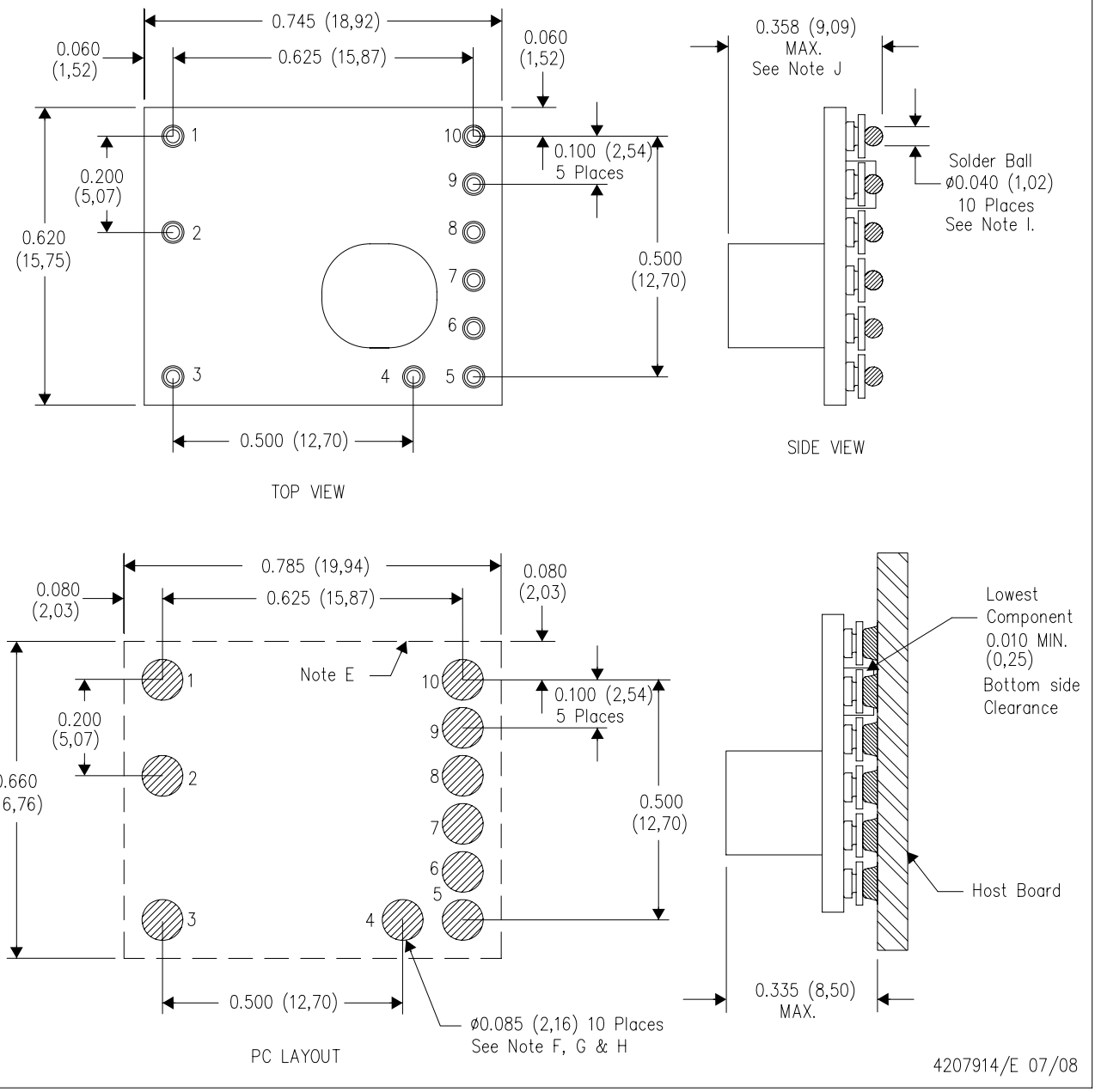

NOTES:
A. All linear dimensions are in inches (mm).
B. This drawing is subject to change without notice.
C. 2 place decimals are ±0.030 (±0,76mm).
D. 3 place decimals are ±0.010 (±0,25mm).
E. Recommended keep out area for user components.
F. Power pin connection should utilize two or more vias to the interior power plane of 0.025 (0,63) I.D. per input, ground and output pin (or the electrical equivalent).
G. Paste screen opening: 0.080 (2,03) to 0.085 (2,16). Paste screen thickness: 0.006 (0,15).
H. Pad type: Solder mask defined.
I. All pins: Material – Copper Alloy
Finish – Tin (100%) over Nickel plate
Solder Ball – See product data sheet.
J. Dimension prior to reflow solder.

BCM (R–PDSS–B10) DOUBLE SIDED MODULE

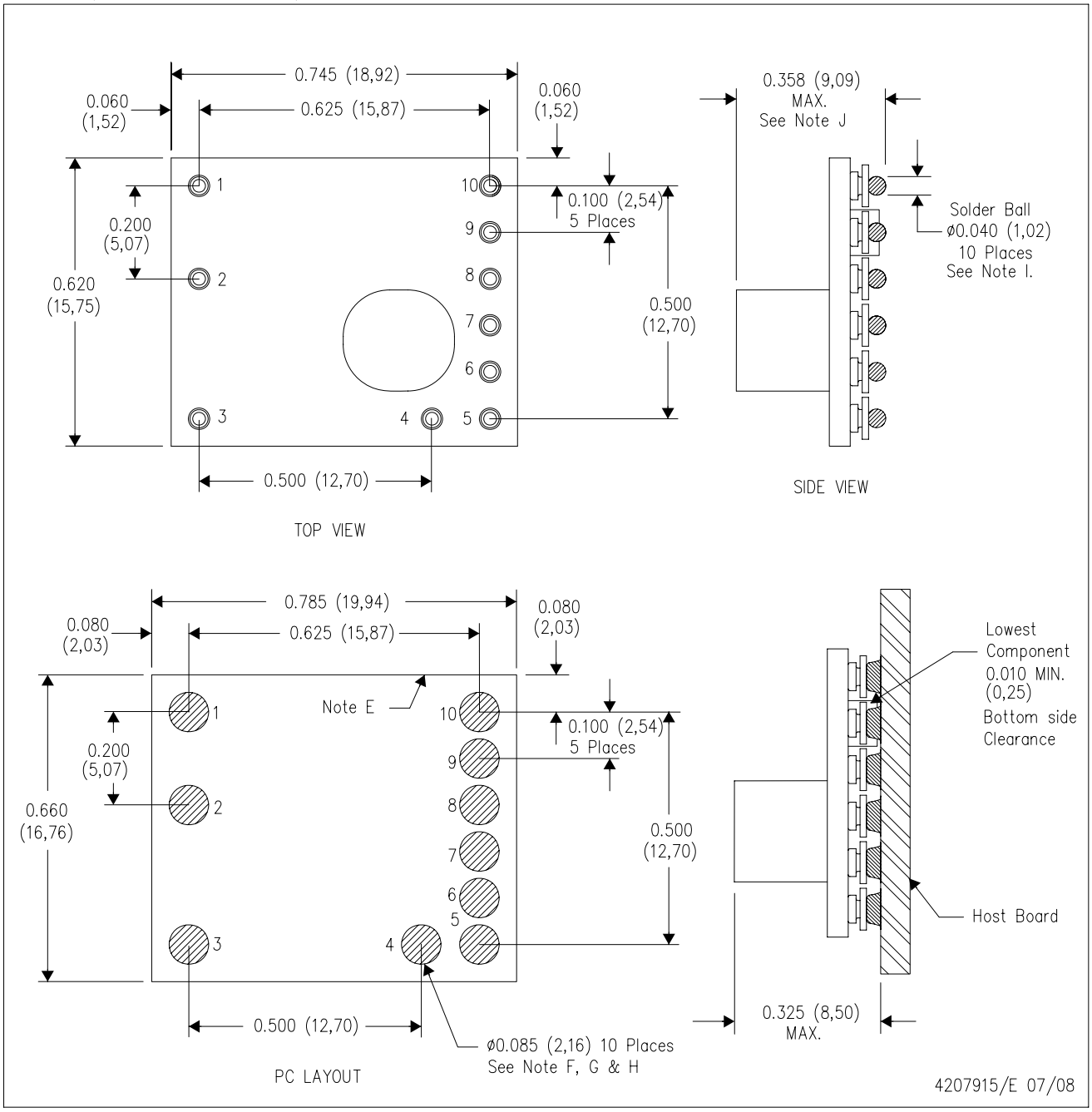

NOTES:
A. All linear dimensions are in inches (mm).
B. This drawing is subject to change without notice.
C. 2 place decimals are ±0.030 (±0,76mm).
D. 3 place decimals are ±0.010 (±0,25mm).
E. Recommended keep out area for user components.
F. Power pin connection should utilize two or more vias to the interior power plane of 0.025 (0,63) I.D. per input, ground and output pin (or the electrical equivalent).
G. Paste screen opening: 0.080 (2,03) to 0.085 (2,16). Paste screen thickness: 0.006 (0,15).
H. Pad type: Solder mask defined.
I. This is a lead–free solder ball design.
Finish: Tin (100%) over Nickel plate
Solder ball: 96.5 Sn/3.0 Ag/0.5 Cu
J. Dimension prior to reflow solder.

IMPORTANT NOTICE

Texas Instruments Incorporated and its subsidiaries (TI) reserve the right to make corrections, modifications, enhancements, improvements, and other changes to its products and services at any time and to discontinue any product or service without notice. Customers should obtain the latest relevant information before placing orders and should verify that such information is current and complete. All products are sold subject to TI's terms and conditions of sale supplied at the time of order acknowledgment.

TI warrants performance of its hardware products to the specifications applicable at the time of sale in accordance with TI's standard warranty. Testing and other quality control techniques are used to the extent TI deems necessary to support this warranty. Except where mandated by government requirements, testing of all parameters of each product is not necessarily performed.

TI assumes no liability for applications assistance or customer product design. Customers are responsible for their products and applications using TI components. To minimize the risks associated with customer products and applications, customers should provide adequate design and operating safeguards.

TI does not warrant or represent that any license, either express or implied, is granted under any TI patent right, copyright, mask work right, or other TI intellectual property right relating to any combination, machine, or process in which TI products or services are used. Information published by TI regarding third-party products or services does not constitute a license from TI to use such products or services or a warranty or endorsement thereof. Use of such information may require a license from a third party under the patents or other intellectual property of the third party, or a license from TI under the patents or other intellectual property of TI.

Reproduction of TI information in TI data books or data sheets is permissible only if reproduction is without alteration and is accompanied by all associated warranties, conditions, limitations, and notices. Reproduction of this information with alteration is an unfair and deceptive business practice. TI is not responsible or liable for such altered documentation. Information of third parties may be subject to additional restrictions.

Resale of TI products or services with statements different from or beyond the parameters stated by TI for that product or service voids all express and any implied warranties for the associated TI product or service and is an unfair and deceptive business practice. TI is not responsible or liable for any such statements.

TI products are not authorized for use in safety-critical applications (such as life support) where a failure of the TI product would reasonably be expected to cause severe personal injury or death, unless officers of the parties have executed an agreement specifically governing such use. Buyers represent that they have all necessary expertise in the safety and regulatory ramifications of their applications, and acknowledge and agree that they are solely responsible for all legal, regulatory and safety-related requirements concerning their products and any use of TI products in such safety-critical applications, notwithstanding any applications-related information or support that may be provided by TI. Further, Buyers must fully indemnify TI and its representatives against any damages arising out of the use of TI products in such safety-critical applications.

TI products are neither designed nor intended for use in military/aerospace applications or environments unless the TI products are specifically designated by TI as military-grade or "enhanced plastic." Only products designated by TI as military-grade meet military specifications. Buyers acknowledge and agree that any such use of TI products which TI has not designated as military-grade is solely at the Buyer's risk, and that they are solely responsible for compliance with all legal and regulatory requirements in connection with such use.

TI products are neither designed nor intended for use in automotive applications or environments unless the specific TI products are designated by TI as compliant with ISO/TS 16949 requirements. Buyers acknowledge and agree that, if they use any non-designated products in automotive applications, TI will not be responsible for any failure to meet such requirements.

Following are URLs where you can obtain information on other Texas Instruments products and application solutions:

Products		**Applications**	
Amplifiers	amplifier.ti.com	Audio	www.ti.com/audio
Data Converters	dataconverter.ti.com	Automotive	www.ti.com/automotive
DLP® Products	www.dlp.com	Communications and Telecom	www.ti.com/communications
DSP	dsp.ti.com	Computers and Peripherals	www.ti.com/computers
Clocks and Timers	www.ti.com/clocks	Consumer Electronics	www.ti.com/consumer-apps
Interface	interface.ti.com	Energy	www.ti.com/energy
Logic	logic.ti.com	Industrial	www.ti.com/industrial
Power Mgmt	power.ti.com	Medical	www.ti.com/medical
Microcontrollers	microcontroller.ti.com	Security	www.ti.com/security
RFID	www.ti-rfid.com	Space, Avionics & Defense	www.ti.com/space-avionics-defense
RF/IF and ZigBee® Solutions	www.ti.com/lprf	Video and Imaging	www.ti.com/video
		Wireless	www.ti.com/wireless-apps

Mailing Address: Texas Instruments, Post Office Box 655303, Dallas, Texas 75265
Copyright © 2010, Texas Instruments Incorporated