

Schematic

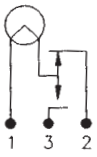

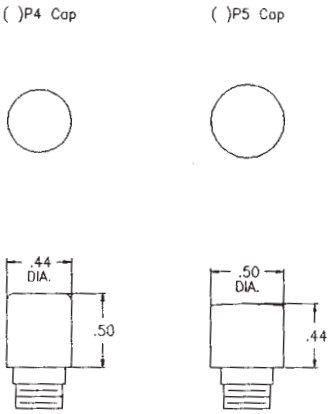

Material and Finishes
Mounting tube and nuts, aluminum, black anodized per MIL-A-8625A. Lockwasher, stainless steel. Brass terminals, tin plated per MIL-T-10727A.
Cap Assembly
Lens, high impact-resistant plastic per L-P-349.
Lamp
T-1 ¾ midget flange base. See Lamp Selection Guide.
Mounting
Assembly mounts from rear of panel. All mounting hardware supplied. Recommended mounting hole .500 in. ±015 in. dia.
Weight
Approximately .4 oz. less lamp.

03-91080 Type
Incandescent Miniature
General Purpose
Size T-1 ¾

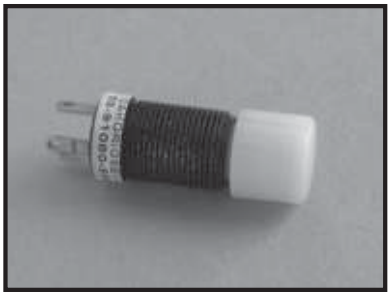

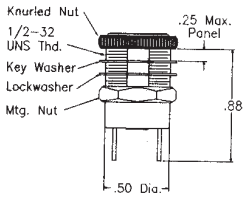

Panel Cutouts

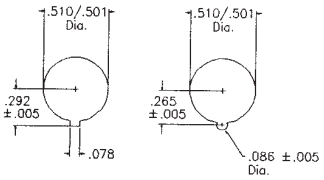

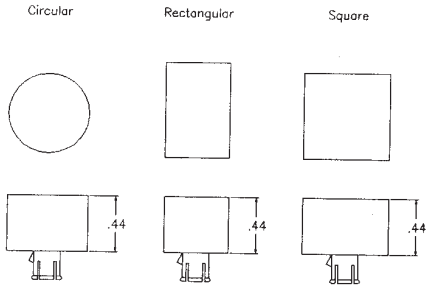

Schematic

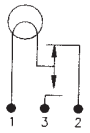

Material and Finishes
Mounting tube and knurled nut, clear anodized per MIL-A-8625A. Mounting nut and key washer, brass, nickel plate. Lockwasher, stainless steel or steel, nickel plate, Brass terminals, tin plated per MIL-T-10727A.
Cap Assembly
Lens, high impact-resistant plastic per L-P-349. Friction fit lens caps, rotatable or keyed. Uses Presslite friction cap pushbuttons.
Lamp
T-1 ¾ midget flange base.
Mounting
Assembly mounts from rear of panel. All mounting hardware supplied. Recommended mounting hole, see drawing.
Weight
Approximately .5 oz. less lamp.

59-52280 Type
Incandescent Miniature
Optional Press to Test
Size T-1 ¾

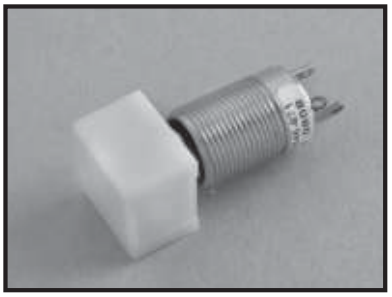

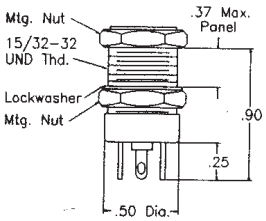

Schematic

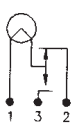

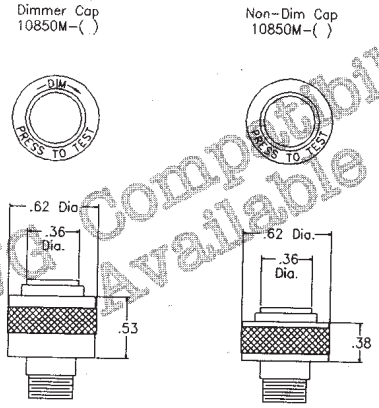

NWG Compatibility Available

Material and Finishes
Mounting tube and nuts, aluminum, black anodized per MtL-A-8625A. Lockwasher, stainless steel. Brass terminals, tin plated per MIL-T-10727A.
Cap Assembly
Lens, high impact-resistant plastic per L-P-349, NVG Green, flat glass lens. Lens holders, aluminum, black anodized.
Lamp
T-1 ¾ midget flange base.
Mounting
Assembly mounts from rear of panel. All mounting hardware supplied. Recommended mounting hole .500 in. ±.015 dia.
Identification
Identified with MS P/N and base assembly number.
Weight
Approximately .5 oz. less lamp.

01-91180 Type
Originally designed
to meet MS 25041
Incandescent Miniature
Size T-1 ¾



03-90980 Type
Incandescent Miniature
Size T-1 ¾



Material and Finishes
Mounting tube, black glass filled nylon per MIL-M-19887. Mounting nut aluminum, black anodized per MIL-A-8625A. Lockwasher, stainless steeel or steel, nickel plate. Brass terminals, tin plated per MIL-T-10727A.
Cap Assembly
Lens, high impact-resistant plastic per L-P-349. Lens holders are aluminum, black anodized.
Lamp
T-1 ¾ midget flange base.
Mounting
Assembly mounts from front of panel. All mounting hardware supplied. Recommended mounting hole .500 in. +/- .015 in. dia.
Weight
Approx. .9 oz. less lamp.

BASE ASSEMBLY
03-90980

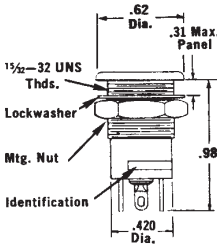

SCHEMATIC



CAP STYLES

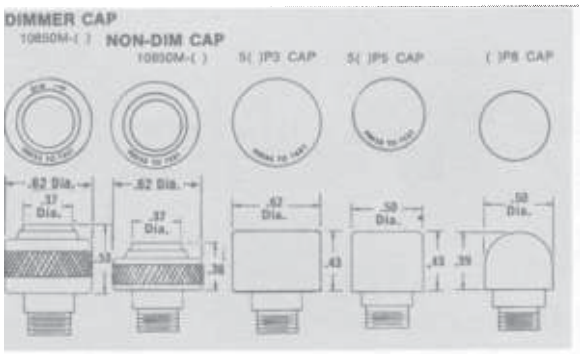

02-91180 Type
Originally designed
to meet MS 25331
Incandescent Standard
Size T-3 ¼



Material and Finishes
Mounting tube and nuts, aluminum, black anodized per MIL-A-8625A. Lockwasher, stainless steel. Brass terminals, tin plated per MIL-T-10727A.
Cap Assembly
Lens is high impact-resistant plastic per L-P-34g. Lens holders, aluminum, black anodized.
Lamp
T-3 ¼ miniature bayonet base.
Mounting
Assembly mounts from rear of panel. All mounting hardware supplied. Recommended mounting hole .640 in. ± .015 in. dia.
Identification
Identified with MS P/N and base assembly number
Weight
Approximately .8 oz. less lamp.

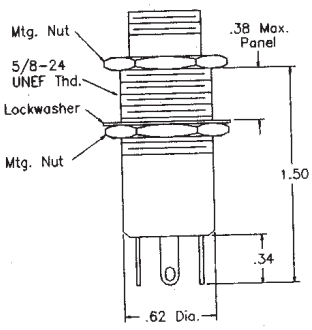

Schematic

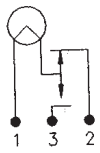

Dimmer Cap
10850–( )

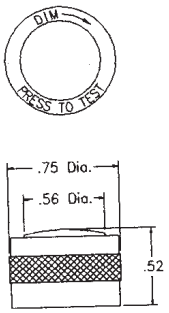

Non–Dim Cap
10850–( )

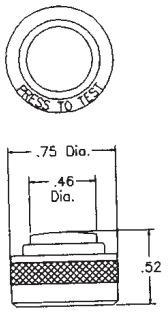

05-90880 Type
05-90881 Type
Incandescent Miniature
Watertight - Size T-1 ¾



Material and Finishes
Mounting tube, black glass filled nylon per MIL-M-19887. Mounting nut aluminum, black anodized per MIL-A-8625A. Lockwasher, stainless steeel or steel, nickel plate. Brass terminals, tin plated per MIL-T-10727A. Rubber boot and washer, silicone rubber.
Cap Assembly
Lens, high impact-resistant plastic per L-P-349. Lens holders are aluminum, black anodized.
Lamp
T-1 ¾ midget flange base.
Mounting
Assembly mounts from front of panel. All mounting hardware supplied. Recommended mounting hole .500 in. +/- .015 in. dia.
Weight
Approx. .3 oz. less lamp.

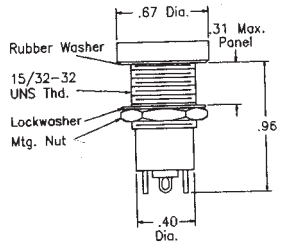

Schematic

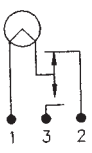

5( )WT7

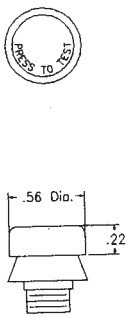

Dimmer Cap
90852–( )

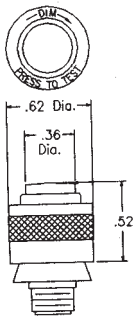

Non–Dim Cap
90852–( )

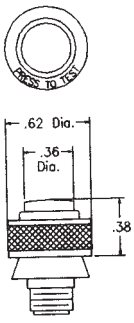

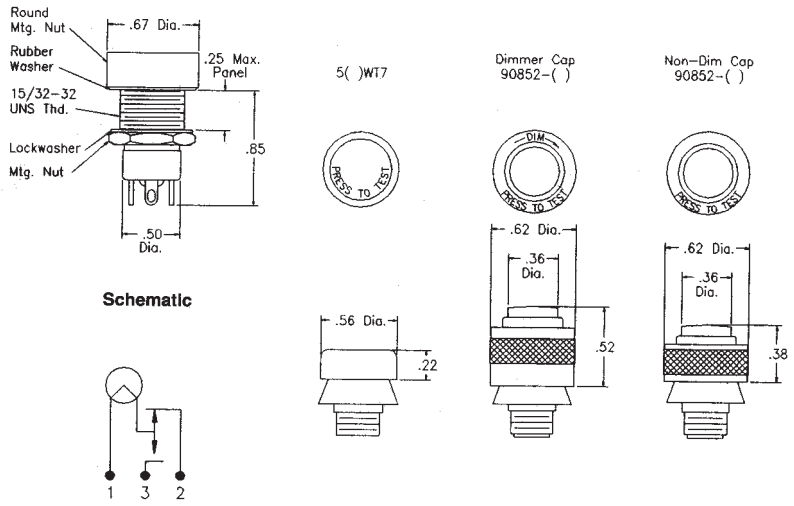

Material and Finishes
Mounting tube and nuts, aluminum, black anodized per MIL-A-8625A. Lockwasher, stainless steel or steel, nickel plate. Brass terminals, tin plated per MIL-T-1O727A. Rubber boot and washer, silicone rubber.
Cap Assembly
Lens, high impact-resistant plastic per L-P-349 Lens holders are aluminum, black anodized.
Lamp
T-1 ¾ midget flange base.
Mounting
Assembly mounts from rear of panel. All mounting hardware supplied. Recommended mounting hole .500 in. ± .015 in. dia.
Weight
Approximately .44 oz. less lamp.

05-91182 Type
Incandescent Miniature
Watertight - Size T-1 ¾

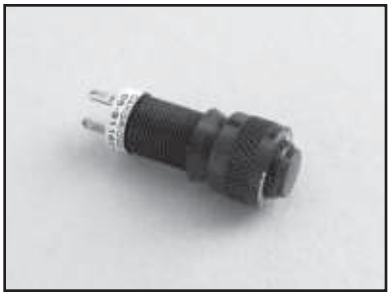

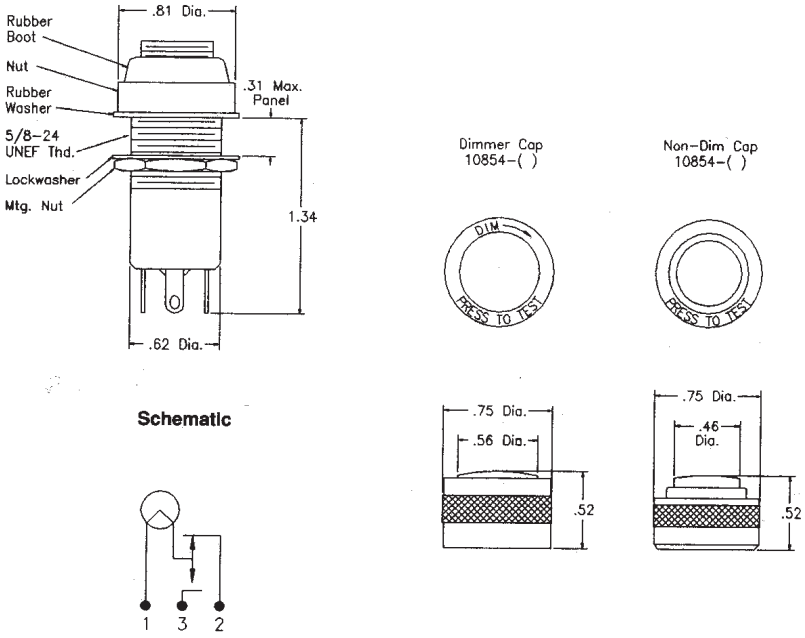

Material and Finishes
Mounting tube and nuts, aluminum, black anodized per MIL-A-8625A. Lockwasher, stainless steel or steel, nickel plate. Brass terminals, tin plated per MIL-T-10727A. Rubber boot and washer, silicone rubber.
Cap Assembly
Lens, high impact-resistant plastic per L-P-349. Lens holders, aluminum, black anodized.
Lamp
T-3 ¼ miniature bayonet base.
Mounting
Assembly mounts from rear of panel. All mounting hardware supplied. Recommended mounting hole .640 in. ± .015 in. dia.
Weight
Approximately .85 oz. less lamp.

06-91182 Type
Incandescent Watertight
Size T-3 ¼



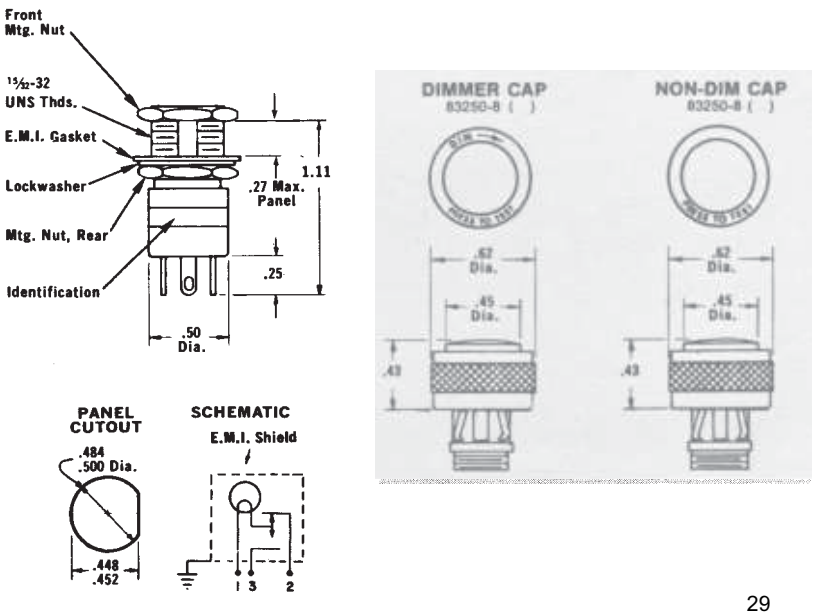

Material and Finishes
Lens holder and front mounting nut is black anodized per MIL-A-8625A. Mounting tube & rear Mtg. nut, is bright nickel plated per QQ-N-200. Lockwasher is stainless steel. Terminals brass, gold plated per MIL-G-45204.
Cap Assembly
Lens is high impact-resistant plastic per L-P-349. Lens. holders are aluminum, black anodized.
Lamp
T-1 ¾ midget flange base.
Mounting
Assembly mounts from rear of panel. All mounting hardware supplied. Flat on Mtg. tube provides for keyed installation.
Weight
Approx. .5 oz less lamp.

08-83281 Type
Incandescent Miniature
EMI Suppressed
Size T-1 ¾



08-83283 Type
Incandescent Miniature
EMI Suppressed Watertight
Size T-1 ¾



Material and Finishes
Round mounting nut, aluminum, black anodized per MIL-A-8625A. Mounting tube and mounting nut, bright nickel plated per QQ-N-290. Lockwasher, steel, nickel plated. Rubber boot and washer, silicone rubber Brass terminals, gold plated per MIL-G-45204,
Cap Assembly
Lens, high impact-resistant plastic per L-P-349. Lens holders, aluminum, black anodized.
Lamp
T-1 ¾ midget flange base.
Mounting
Assembly mounts from rear of panel. All mounting hardware supplied. Flat on mounting tube provides for keyed installation.
Weight
Approximately .6 oz. less lamp.

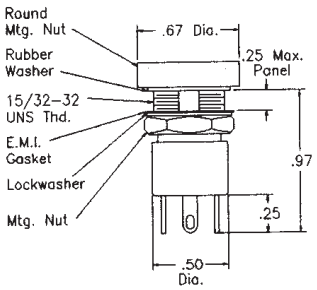

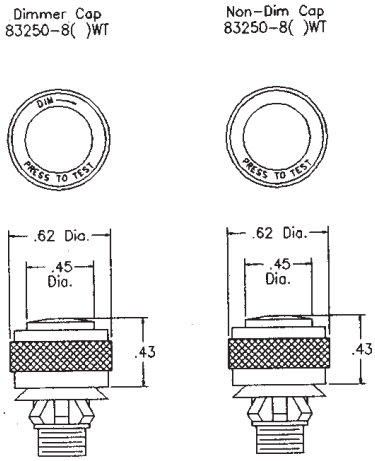

Panel Cutout

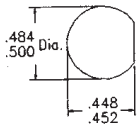

Schematics

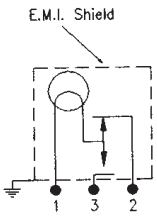

04-VM906 Type
Incandescent General Purpose
Size T-3 ¼



Material and Finishes
Mounting tube, aluminum, black anodized per MIL-A-8625A. Mounting nut, steel cad plate per QQ-P-416. Lockwasher, stainless steel or steel, nickel plate. Brass terminals, tin plated per MIL-T-10727A.
Cap Assembly
Lens, high impact-resistant plastic per L-P-349. Standard colors are semi-diffusing.
Lamp
T-3 ¼ miniature bayonet base.
Mounting
Assembly mounts from front of panel. All mounting hardware supplied. Recommended mounting hole .640 in. +/- .015 in. dia.
Weight
Approx. .55 oz. less lamp.

BASE ASSEMBLY
04-91180S

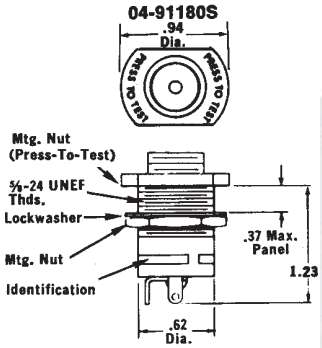

SCHEMATIC

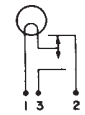

CAP STYLES

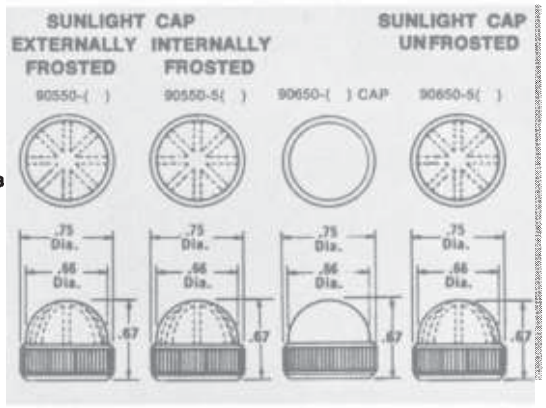

Press to Test

BASE ASSEMBLY
03-93480

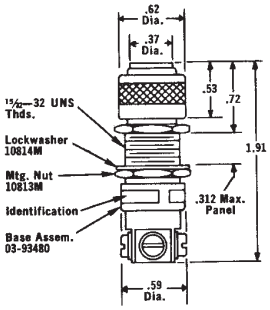

CAP STYLES

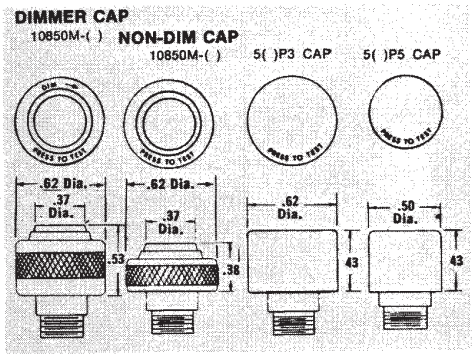

SCHEMATICS



Materials and Fiber
Mounting tube and nuts are aluminum, black anodized per MIL-A-8625A. Lockwasher, stainless steel or steel, nickel plated. Terminals are 4-40 screws, nickel plate QQ-N-290.
Cap Assembly
Lens is high impact-resistant plastic per L-P-349a.
Lamp
T-1 ¾ midget flange base. Standard colors are transparent. Also available in translucent or diffusing caps.
Mounting
Assembly mounts from rear of panel. All mounting hardware supplied. Recommended mounting hole .500 ± .015 diameter.
Weight
Approximately .50 oz. less lamp.

03-93480 Type
03-93481 Type
Incandescent Miniature
General Purpose - Size T-1 ¾



Push In

Base Assembly
99-33080

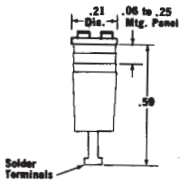

Base Assembly
99-33081

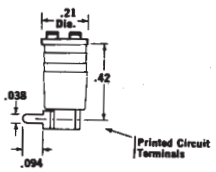

Cap Styles

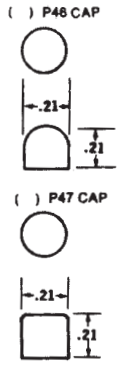

Material and Finishes
Housing and lamp base, gray glass filled nylon. Terminals, beryllium copper, gold flashed. Retainer clip, stainless steel.
Lens Cap
High impact-resistant plastic per L-P-393 (polycarbonate).
Lamp
T-1 wire terminal lamp; Lamp is replaced by removing snap-on cap.
Mounting
Press-in: Assembly press fits into .189 in. dia. hole. No mounting hardware required.
Retainer clip: For mounting assembly into .200 in. ± 005 in. dia. hole or panels less than .06 in. thick. Order clip 2-1186-643 separately.

99-33080 Type
99-33081 Type
Incandescent Subminiature
General Purpose - Size T-1

