SURFACE MOUNT LED LAMP
STANDARD BRIGHT 0606

QTLP600C-23 HER/Yellow

QTLP600C-24 HER/Green

QTLP600C-34 Yellow/Green

QTLP600C-74 AlGaAs Red/Green

PACKAGE DIMENSIONS

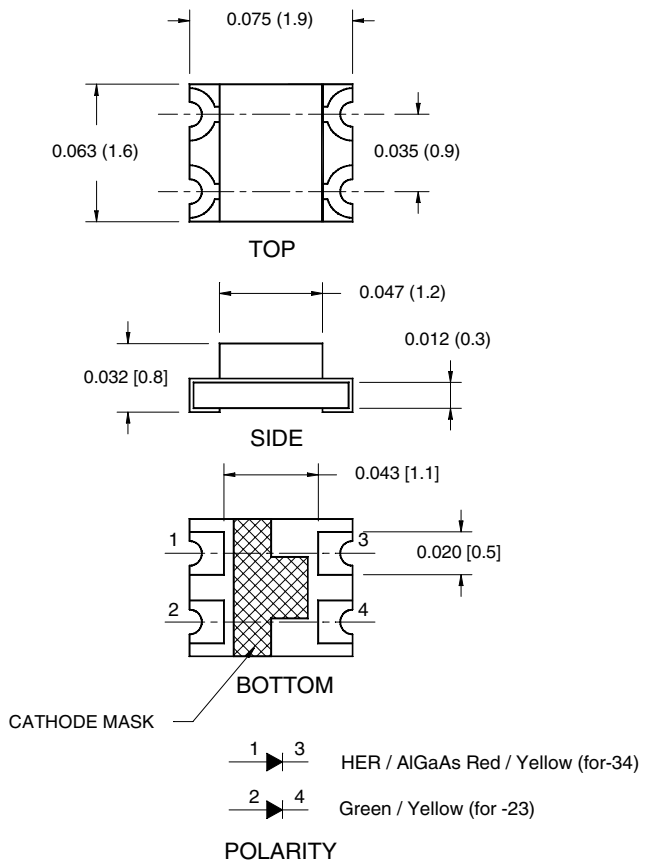

NOTE:

Dimensions for all drawings are in inches (mm).

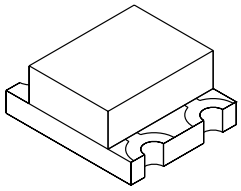

APPLICATIONS

- Keypad backlighting
- Push-button backlighting
- LCD backlighting

DESCRIPTION

These bi-color surface mount chip LEDs are designed to fit industry standard footprint. Small size, low profile and wide viewing angle make these LEDs ideal for backlighting applications and panel illumination.

FEATURES

- Miniature footprint - 1.9(L) X 1.6(W) X 0.8(H) mm
- Wide viewing angle of 130°
- Water clear optics
- Moisture-proof packaging
- Available in 0.315” (8mm) width tape on 7” (178mm) diameter reel; 2,000 units per reel

© 2001 Fairchild Semiconductor Corporation

QTLP600C-23 HER/Yellow

QTLP600C-24 HER/Green

QTLP600C-34 Yellow/Green

QTLP600C-74 AlGaAs Red/Green

ABSOLUTE MAXIMUM RATINGS (T_A =25°C Unless otherwise specified)

Parameter	Symbol	QTLP600C				Units
		-23	-24	-34	-74	
Continuous Forward Current	I_F	30 / 30	30 / 30	30 / 30	30 / 30	mA
Peak Forward Current (f = 1.0 KHz, Duty Factor = 1/10)	I_{FM}	160 / 160	160 / 160	160 / 160	180 / 160	mA
Reverse Voltage	V_R	5	5	5	5	V
Power Dissipation	P_D	84 / 84	84 / 84	84 / 84	72 / 84	mW
Operating Temperature	T_{OPR}	-40 to +85				°C
Storage Temperature	T_{STG}	-40 to +90				°C
Lead Soldering Time	T_{SOL}	260 for 5 sec				°C

ELECTRICAL / OPTICAL CHARACTERISTICS (T_A =25°C)

Parameter	Symbol	QTLP600C				Units
		-23	-24	-34	-74	
Luminous Intensity (mcd)						
Minimum	I_V	4 / 2.5	4 / 7.5	2.5 / 7.5	10 / 7.5	I_F = 20mA
Typical		7 / 4	7 / 12.5	4 / 12.5	20 / 12.5	
Forward Voltage (V)						
Maximum	V_F	2.8 / 2.8	2.8 / 2.8	2.8 / 2.8	2.4 / 2.8	I_F = 20mA
Typical		2.0 / 2.0	2.0 / 2.1	2.0 / 2.1	1.9 / 2.1	
Wavelength (nm)						
Peak	λ_P	635 / 585	635 / 565	585 / 565	660 / 565	I_F = 20mA
Dominant	λ_D	630 / 590	630 / 570	590 / 570	645 / 570	
Spectral Line Half Width (nm)	$\Delta\lambda$	45 / 35	45 / 30	35 / 30	20 / 30	I_F = 20mA
Viewing Angle (°)	$2\Theta_{1/2}$	130	130	130	130	I_F = 20mA

TYPICAL PERFORMANCE CURVES

Fig. 1 Forward Current vs. Forward Voltage

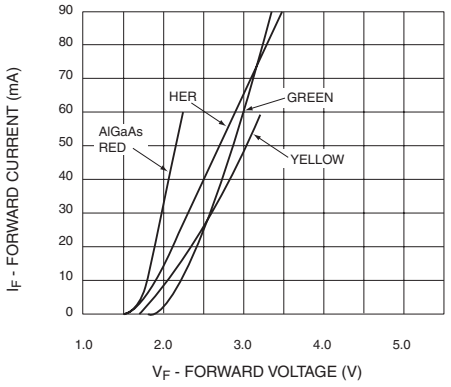

Fig. 2 Relative Luminous Intensity vs. DC Forward Current

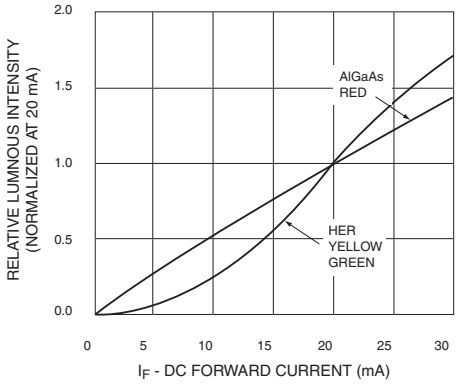

Fig. 3 Relative Intensity vs. Peak Wavelength

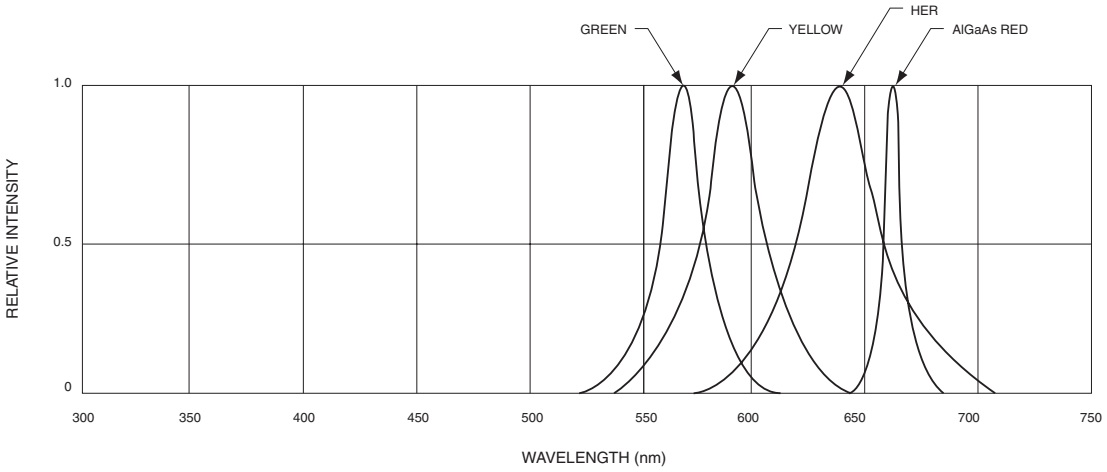

Fig.4 Radiation Diagram

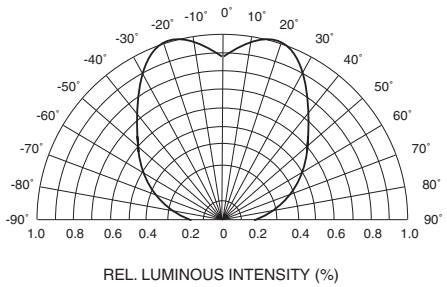

Fig.5 Maximum Forward Current vs. Ambient Temperature

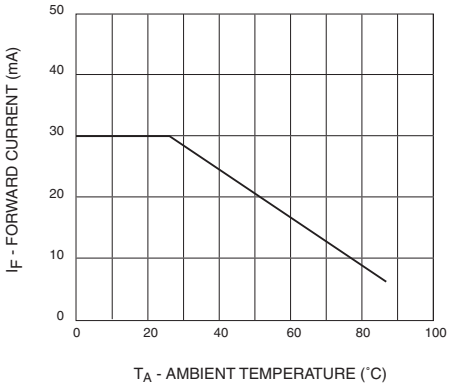

RECOMMENDED PRINTED CIRCUIT BOARD PATTERN

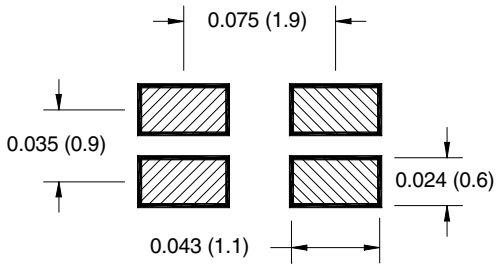

RECOMMENDED IR REFLOW SOLDERING PROFILE

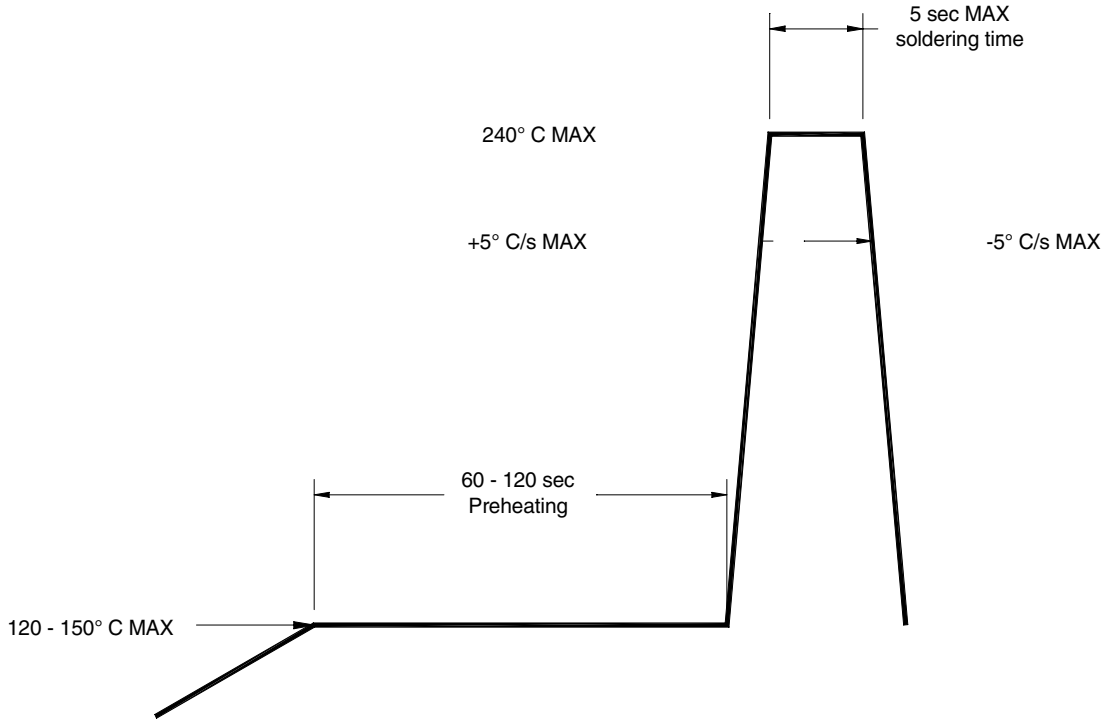

QTLP600C-23 HER/Yellow

QTLP600C-24 HER/Green

QTLP600C-34 Yellow/Green

QTLP600C-74 AlGaAs Red/Green

TAPE AND REEL DIMENSIONS

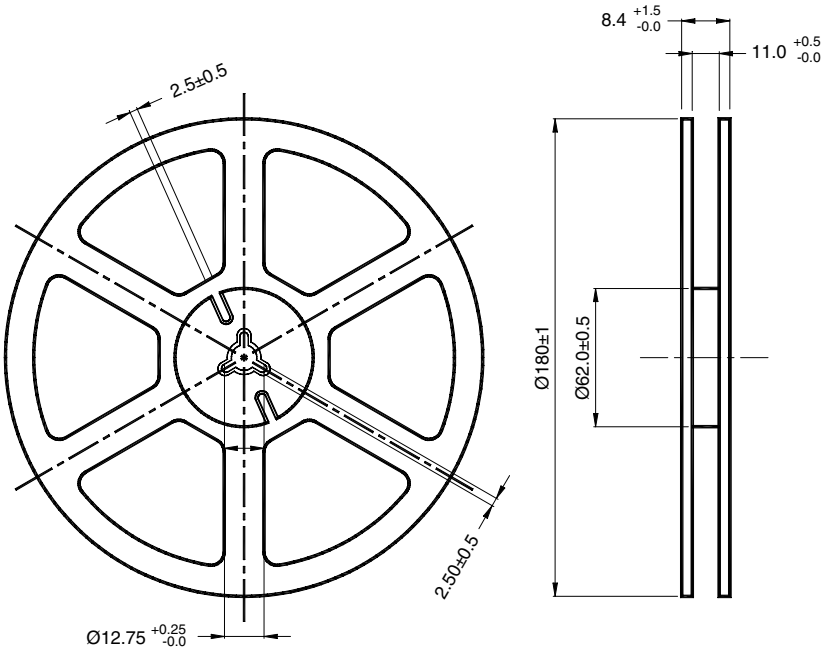

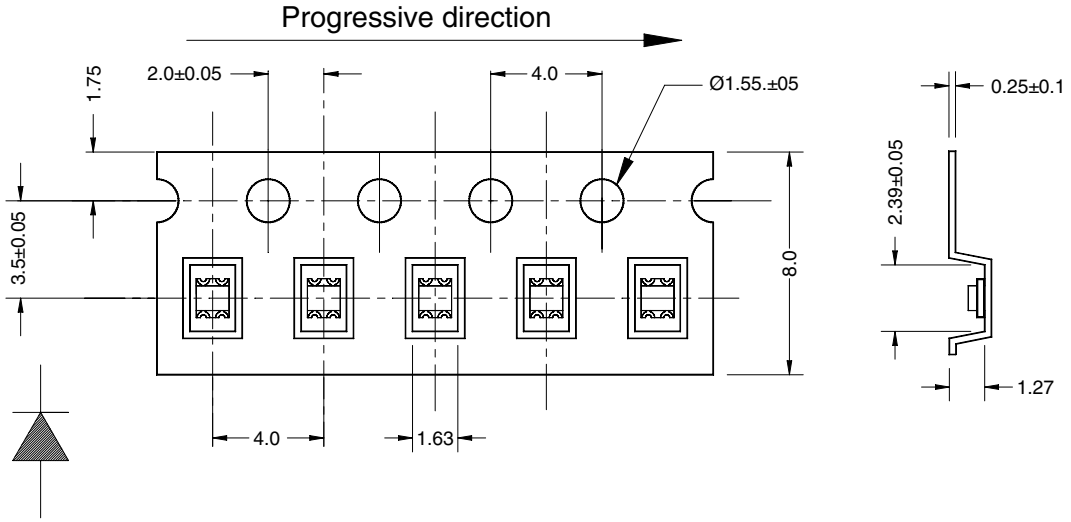

Dimensional tolerance is ± 0.1mm unless otherwise specified

Angle: ± 0.5

Unit: mm

DISCLAIMER

FAIRCHILD SEMICONDUCTOR RESERVES THE RIGHT TO MAKE CHANGES WITHOUT FURTHER NOTICE TO ANY PRODUCTS HEREIN TO IMPROVE RELIABILITY, FUNCTION OR DESIGN. FAIRCHILD DOES NOT ASSUME ANY LIABILITY ARISING OUT OF THE APPLICATION OR USE OF ANY PRODUCT OR CIRCUIT DESCRIBED HEREIN; NEITHER DOES IT CONVEY ANY LICENSE UNDER ITS PATENT RIGHTS, NOR THE RIGHTS OF OTHERS.

LIFE SUPPORT POLICY

FAIRCHILD'S PRODUCTS ARE NOT AUTHORIZED FOR USE AS CRITICAL COMPONENTS IN LIFE SUPPORT DEVICES OR SYSTEMS WITHOUT THE EXPRESS WRITTEN APPROVAL OF THE PRESIDENT OF FAIRCHILD SEMICONDUCTOR CORPORATION. As used herein:

1. Life support devices or systems are devices or systems which, (a) are intended for surgical implant into the body,or (b) support or sustain life, and (c) whose failure to perform when properly used in accordance with instructions for use provided in labeling, can be reasonably expected to result in a significant injury of the user.
2. A critical component in any component of a life support device or system whose failure to perform can be reasonably expected to cause the failure of the life support device or system, or to affect its safety or effectiveness.