Technical Data Sheet

DPDT Ramses SMA2.9 40GHz Failsafe Indicators 28Vdc Diodes Pins
Terminals with bracket

PAGE **1/2**	ISSUE **22-03-22**	SERIE : **DPDT**	PART NUMBER : **R577823030**

RF CHARACTERISTICS

Frequency range : **0 - 40 GHz**
Impedance : **50 Ohms**

Frequency (GHz)	DC - 6	6 - 12.4	12.4 - 18	18 - 26.5	26.5 - 40
VSWR max	1.30	1.40	1.50	1.70	1.90
Insertion loss max	0.30 dB	0.40 dB	0.50 dB	0.70 dB	0.80 dB
Isolation min	70 dB	60 dB	60 dB	55 dB	50 dB
Average power (*)	80 W	60 W	50 W	20 W	10 W

ELECTRICAL CHARACTERISTICS

Actuator : **FAILSAFE**
Nominal current ** : **140 mA**
Actuator voltage (Vcc) : **28V (24 to 30V)**
Terminals : **solder pins (250°C max. / 30 sec.)**
Indicator rating : **1 W / 30 V / 100 mA**

MECHANICAL CHARACTERISTICS

Connectors : **SMA 2.9 female per MIL-C 39012**
Life : **2.5 million cycles**
Switching Time*** : **< 15 ms**
Construction : **Splashproof**
Weight : **< 100 g**

ENVIRONMENTAL CHARACTERISTICS

Operating temperature range : **-40°C to +85°C**
Storage temperature range : **-55°C to +85°C**

(* Average power at 25°C per RF Path)
(** At 25° C ±10%)
(*** Nominal voltage ; 25° C)

This document contains proprietary information and such information shall not be disclosed to any third party for any purpose whatsoever or used for manufacturing purposes without prior written agreement from Radiall. The data defined in this document are given as an indication, in the effort to improve our products; we reserve the right to make any changes judged necessary.

DRAWING

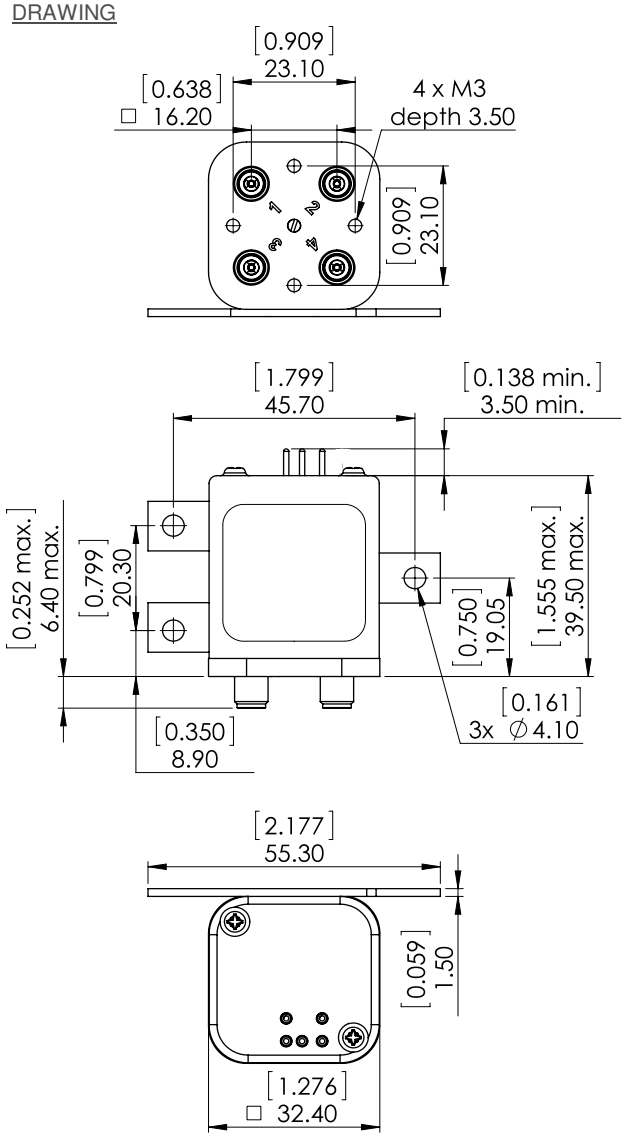

General tolerances : ±0,5 mm [0,02 in]

LABEL

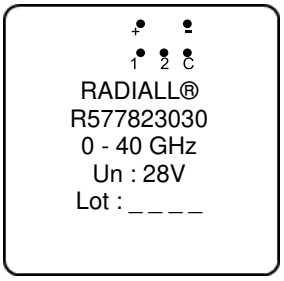

SCHEMATIC DIAGRAM

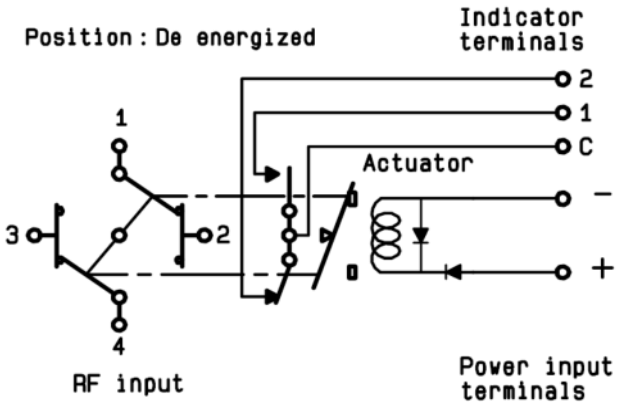

Voltage	RF Continuity	Ind.
energized	1 ↔ 3 / 2 ↔ 4	C.1
De-energized	1 ↔ 2 / 3 ↔ 4	C.2

This document contains proprietary information and such information shall not be disclosed to any third party for any purpose whatsoever or used for manufacturing purposes without prior written agreement from Radiall. The data defined in this document are given as an indication, in the effort to improve our products; we reserve the right to make any changes judged necessary.