Radiocontrolli
Wireless Modules

Ultra Low Power sub 1GHz Multichannels Radio Transceiver



The **RC-CC1312R-XXX** module is based on Texas Instruments CC1312R1F3RGZ component. This device combines a flexible, very low power RF transceiver with a powerful 48 MHz ARM Cortex M4F CPU in a platform supporting multiple physical layers and RF standard. This device is pin to pin compatible with the module RC-CC1310-XXX.

Module Information :

		Frequency
RC-CC1312R -	**XXX**	**434=434MHz**
		868=868MHz
		915=915MHz

Sub-1Ghz technology is becoming one of the chief driving forces behind the **Internet of Things (Iot)**, in particular this type of module is ideal for this applications basically for the following reasons :

Ultra low power consumption, the consumption of this device is 5.5mA when receiving and 23.5mA when transmitting at +14dBm (13.4mA at +10dBm) in sleep mode the consumption is 0.6µA (microamps).

Long range operations, the sensitivity parameter is -110dBm at data rates of 50 kbps and down to -124dBm when the data rate is 0.625kbps.
Interference from other wireless communications can be overcome with 90dB of blocking.
The RF output power levels can reach up to +14dBm.
All this ensure a robust signaling for long range communications.

SimpleLink-Easylink compatibility,ultra-low power platform designed (from TI) to easily implement the long-range connectivity with low power consumption on the Internet of Things projects (IoT).

TI-15.4 Stack, IEEE802.15.4e/g Standard Based Star Networking Software Designed for long **r**ange & robust star networks

6LoWPAN compatibility with mesh network stack for **Contiki.**

Applications :

- Low-Power Wireless Systems
- Smart Grid and Automatic Meter Reading
- Home and Building Automation
- Wireless Sensor Network
- 6LoWPAN systems

Feature :

- IEEE 802.15.4g mode switch support
- Ultra Low consumption technology
- Powerful ARM Cortex M4
- Supported by the open platform Contiki 6LoWPAN.
- Very Small size

Radiocontrolli s.r.l refuses any responsibility for irregular uses of the devices and for any possible lack or inaccuracy of the data and reserves the right to change in whole or in part these information without notice.

Technical Characteristics

RC-CC1312R-XXX					
Parameter	Symbol	Min.	Typ.	Max.	Units
Operating Voltage	V_{CC}	1.8	3.00	3.8	VDC
Supply Current RX Mode	I_{CRX}		5.80		mA
Supply Current TX Mode +10dBm	I_{CTX1}		13.40		mA
Supply Current TX Mode +14dBm	I_{CTX2}		24.90		mA
Supply Current Standby Mode	I_{CSTB}		0,85		µA
Supply Current Shut Down Mode	I_{CSHU}		150		nA
Operative Frequency	F_{of}		433/868/915		MHz
Frequency Error	F_{pp}		±10		ppm
RF Power Output 50ohm (*)	P_{oo}	-10.0		+14.0	dBm
RF Sensibility 50kbps	S_d		-110.0		dBm
RF Sensibility Long Range Mode 625bps	S_{LR}		-121.0		dBm
Data Rate (*)	D_{CC}	0,01		4.0	Mbit/s
Operative Temperature	T_{LR}	-30		+75	°C

(*) Programmable parameter.

MICROCONTROLLER:
- Powerul 48MHz ARM Cortex - M4F Processor
- 352KB of in-system Programmable Flash
- 256KB of ROM for protocol and library function
- 8KB of SRAM for Cache
- 80KB of Ultralow Leakege SRAM
- Support Over-the-Air Upgrade (OTA)

Development Tools and Software from TI

– CC1312R LaunchPad™ Development Kit
– SimpleLink™ CC13X2-CC26X2 Software Development Kit
– SmartRF™ Studio for simple radio configuration
– Sensor Controller Studio for building low-power sensing applications

For more information and details, please refer to the CC1312R Texas Instruments datasheet.

Block Diagram

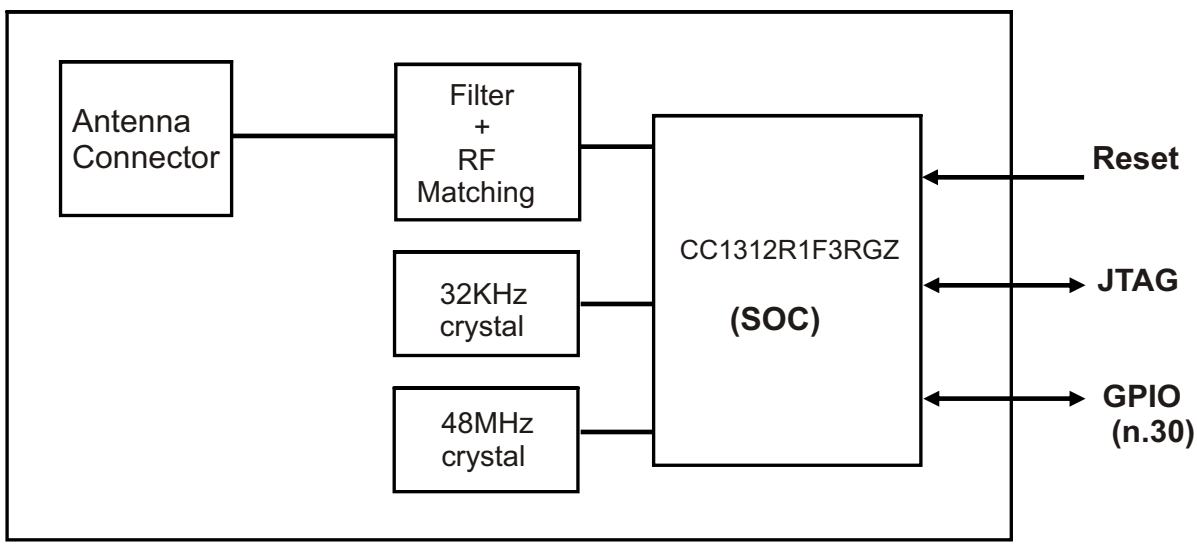

Radiocontrolli s.r.l refuses any responsibility for irregular uses of the devices and for any possible lack or inaccuracy of the data and reserves the right to change in whole or in part these information without notice.

Reference Schematics

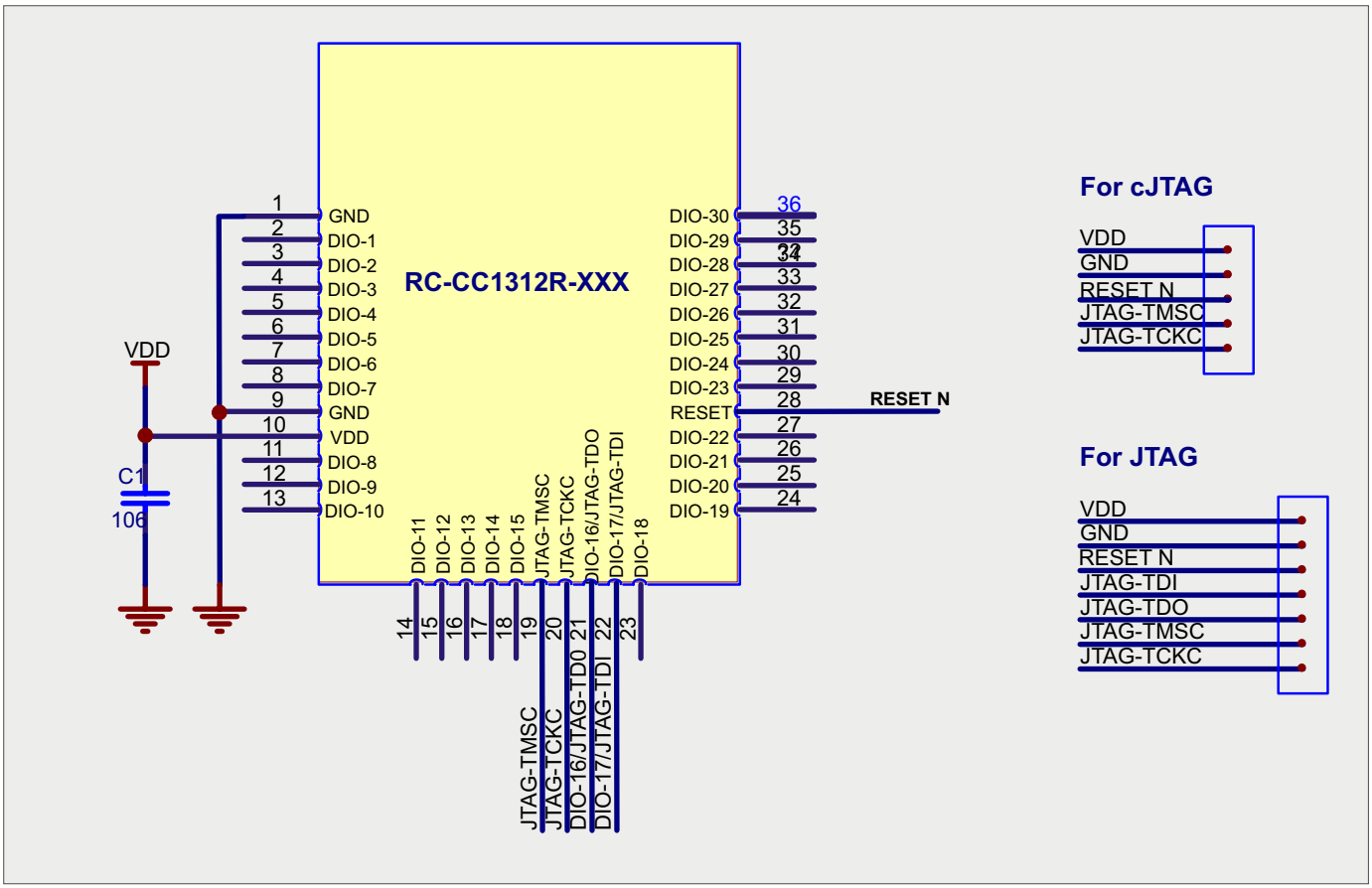

Mechanical Dimension

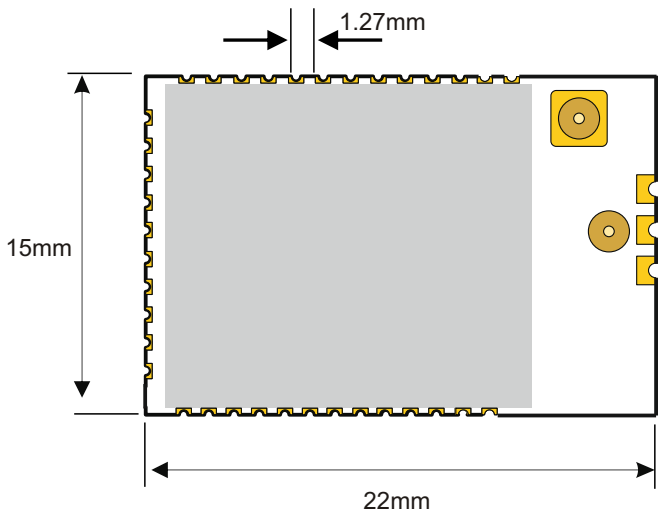

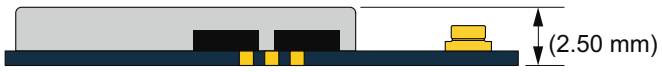

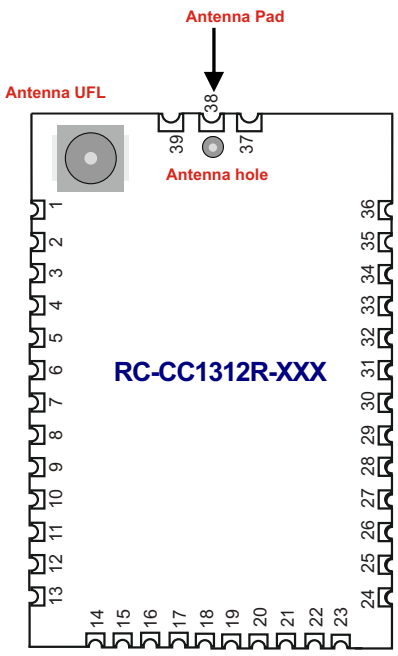

Radiocontrolli s.r.l refuses any responsibility for irregular uses of the devices and for any possible lack or inaccuracy of the data and reserves the right to change in whole or in part these information without notice.

Terminal description RC-CC1312R-XXX

Pads	Name	Description
1	GND	Ground
2	DIO-1	GPIO
3	DIO-2	GPIO
4	DIO-3	GPIO
5	DIO-4	GPIO
6	DIO-5	GPIO, High drive capability
7	DIO-6	GPIO, High drive capability
8	DIO-7	GPIO, High drive capability
9	GND	Ground
10	VDD	Power
11	DIO-8	GPIO
12	DIO-9	GPIO
13	DIO-10	GPIO
14	DIO-11	GPIO
15	DIO-12	GPIO
16	DIO-13	GPIO
17	DIO-14	GPIO
18	DIO-15	GPIO
19	JTAG-TMSC	JTAG TMSC, High drive capability
20	JTAG-TCKC	JTAG TCKC
21	DIO-16	GPIO,JTAG -TDO, High drive capability
22	DIO-17	GPIO,JTAG-TDI, High drive capability
23	DIO-18	GPIO
24	DIO-19	GPIO
25	DIO-20	GPIO
26	DIO-21	GPIO
27	DIO-22	GPIO
28	RESET-N	RESET, (Active low - Internal pull up)
29	DIO-23	GPIO, Analog capability
30	DIO-24	GPIO, Analog capability
31	DIO-25	GPIO, Analog capability
32	DIO-26	GPIO, Analog capability
33	DIO-27	GPIO, Analog capability
34	DIO-28	GPIO, Analog capability
35	DIO-29	GPIO, Analog capability
36	DIO-30	GPIO, Analog capability
37	GND	Ground
38	Antenna	Antenna PAD
39	GND	Ground

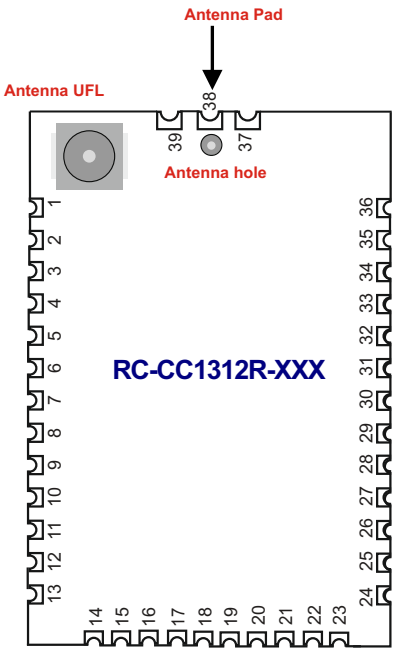

Pin out device

Radiocontrolli s.r.l refuses any responsibility for irregular uses of the devices and for any possible lack or inaccuracy of the data and reserves the right to change in whole or in part these information without notice.

Type of Antenna connection

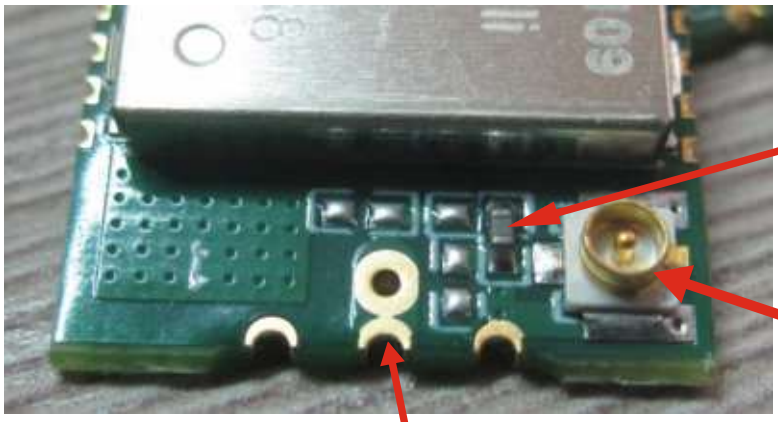

Difference between standard version and «H» version



RC-CC1312R-XXX

- With UFL Connector
- Antenna connection to the UFL connector

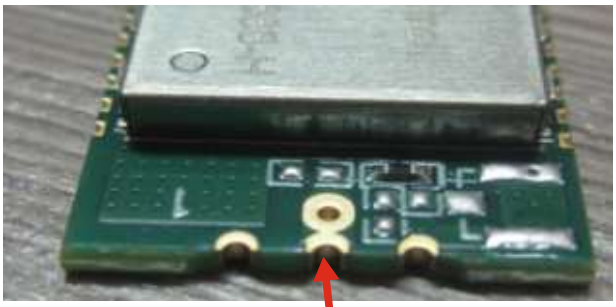

RC-CC1312R-XXX-H

- Without UFL Connector
- Antenna connection to hole and pad



RC-CC1312R-XXX



RC-CC1312R-XXX-H

Radiocontrolli s.r.l refuses any responsibility for irregular uses of the devices and for any possible lack or inaccuracy of the data and reserves the right to change in whole or in part these information without notice.

RC-CC1312R-XXX Adapter board

To make immediate usable the RC-CC1312R-XXX module with TI development systems has been realized the following board adapter.



Adapter board front



Adapter board rear

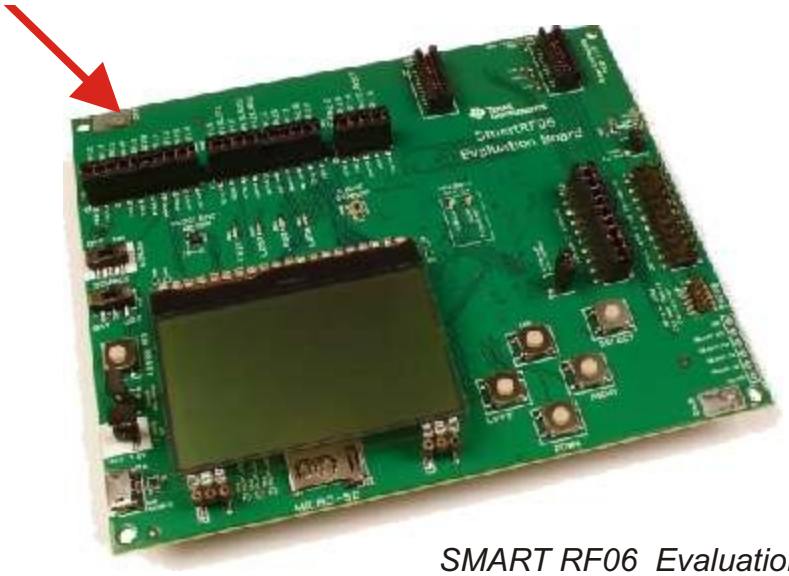

SMART RF06 Evaluation board (TI)

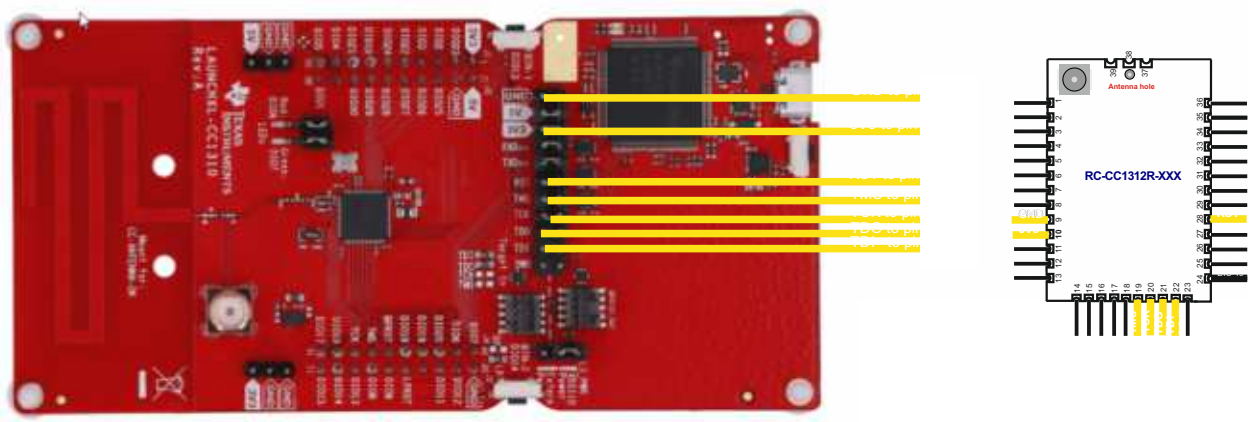

Texas Instruments Launchpad Connection

Radiocontrolli s.r.l refuses any responsibility for irregular uses of the devices and for any possible lack or inaccuracy of the data and reserves the right to change in whole or in part these information without notice.

Recommended Hardware design

1) Hardware

All unused pins should be left floating; do not ground.
All GND pins must be well grounded.
Traces should not be routed underneath the module.

2) Power Supply

The transceiver module must be powered from a regulated voltage.
It is recommended to keep the power supply line for VCC as short and low impedence as possible. Near the power pins it is recommended to insert a ceramic the decoupling capacitor (100nF).

3) Ground Plane

It is recommended to have a copper ground plane under the shielded zone of the module. The ground plane should be unbroken.

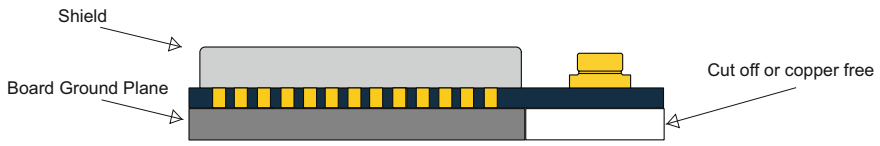

4) Module Placement

The antenna on the PCB has an omnidirectional radiation pattern. To maximize antenna efficiency, an adequate grounding plane must be provided under the module. Instead the areas underneath and surrounding the antenna area must be free of copper.

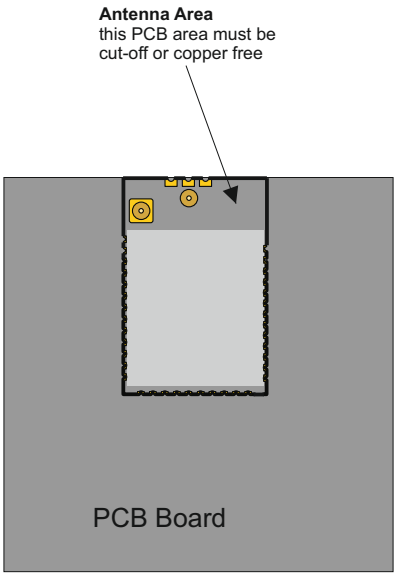

Recommended location XY plane

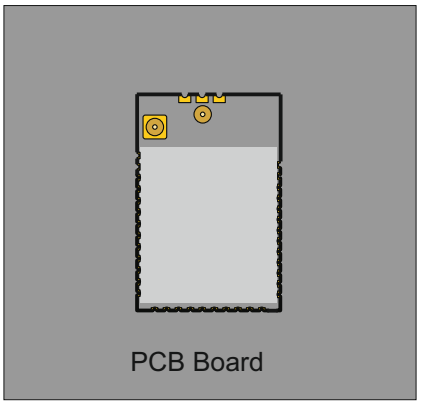

Not Recommended location XY plane

Radiocontrolli s.r.l refuses any responsibility for irregular uses of the devices and for any possible lack or inaccuracy of the data and reserves the right to change in whole or in part these information without notice.

FCC Statement (915MHz version) :

This equipment has been tested and found to comply with the limits for a Class B digital device, pursuant to part 15 of the FCC Rules.
These limits are designed to provide reasonable protection against harmful interference in a residential installation.
This equipment generates, uses and can radiate radio frequency energy and, if not installed and used in accordance with the instructions, may cause harmful interference to radio communications.
However, there is no guarantee that interference will not occur in a particular installation. If this equipment does cause harmful interference to radio or television reception, which can be determined by turning the equipment off and on, the user is encouraged to try to correct the interference by one or more of the following measures:

1) Reorient or relocate the receiving antenna.

2) Increase the separation between the equipment and receiver.

3) Connect the equipment into an outlet on a circuit different from that to which the receiver is connected.

4) Consult the dealer or an experienced radio/TV technician for help.

Caution: Any changes or modifications to this device not explicitly approved by manufacturer could void your authority to operate this equipment.
This device complies with part 15 of the FCC Rules. Operation is subject to the following two conditions:
(1) This device may not cause harmful interference, and
(2) this device must accept any interference received, including interference that may cause undesired operation.

FCC ID : 2ANH5RC-CC1312R-915

Radiocontrolli s.r.l refuses any responsibility for irregular uses of the devices and for any possible lack or inaccuracy of the data and reserves the right to change in whole or in part these information without notice.

Recommended PCB Layout

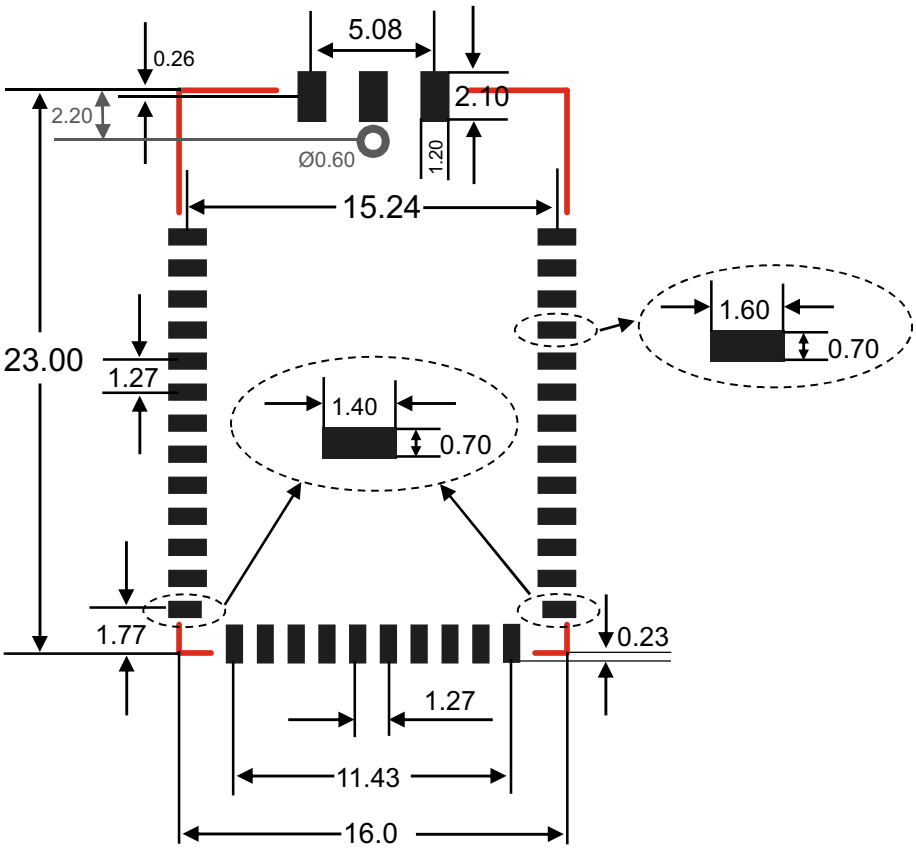

Recommended Reflow Profile for Lead Free Solder

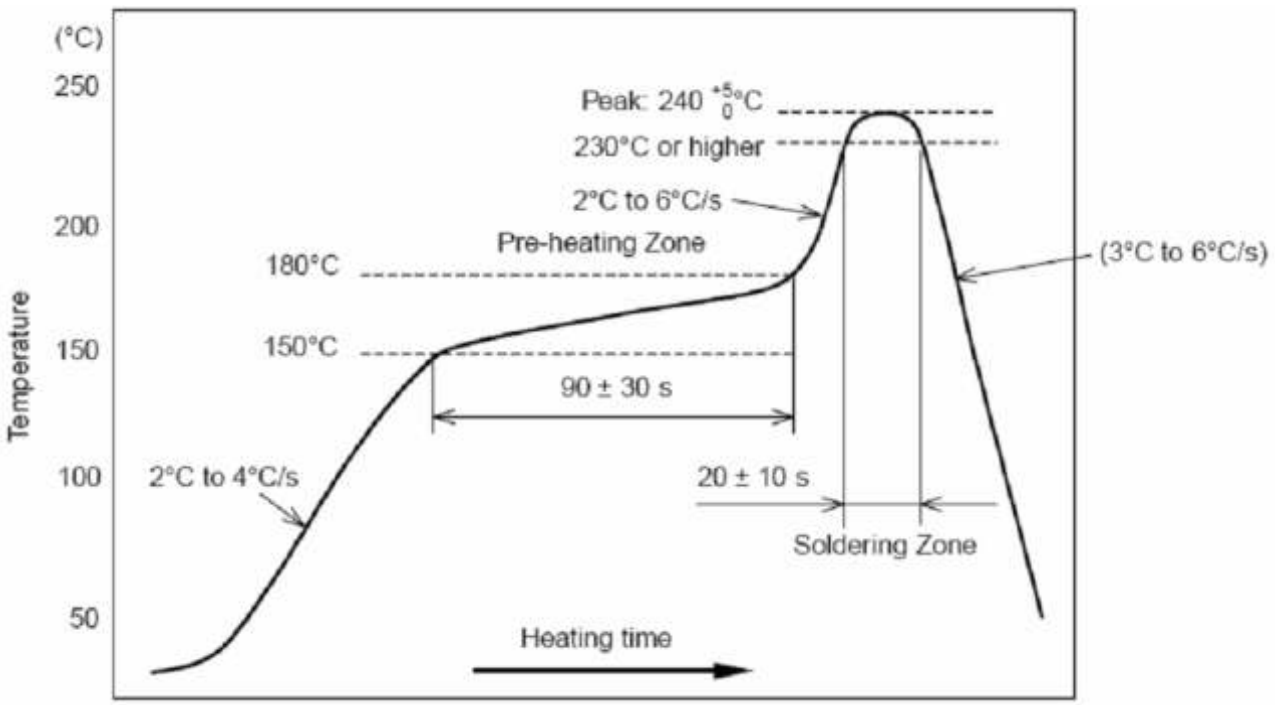

Radiocontrolli s.r.l refuses any responsibility for irregular uses of the devices and for any possible lack or inaccuracy of the data and reserves the right to change in whole or in part these information without notice.

REEL DIMENSIONS

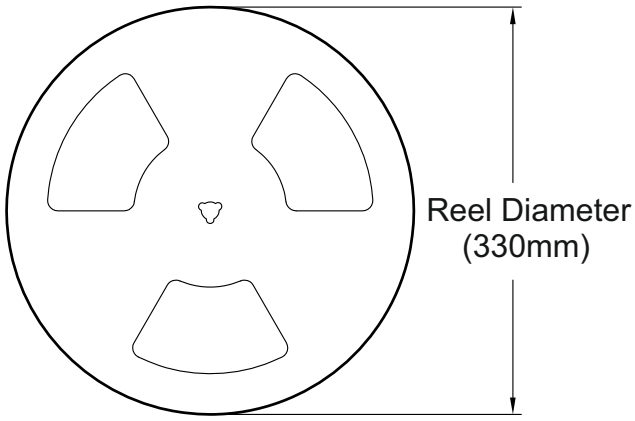

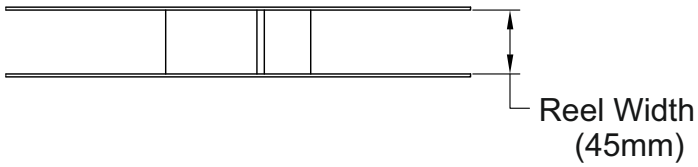

TAPE DIMENSIONS

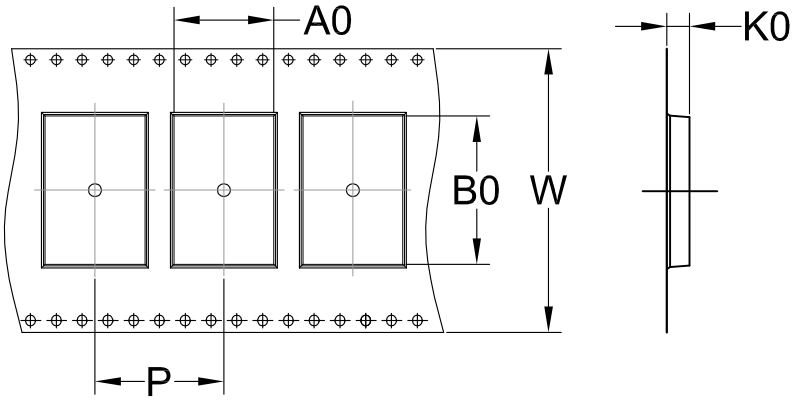

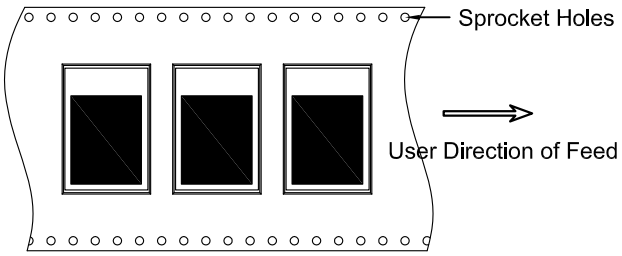

A0	Dimension designed to accommodate the component width	15.5mm	± 0.10mm
B0	Dimension designed to accommodate the component length	23.0mm	± 0.10mm
K0	Dimension designed to accommodate the component thickness	3.5mm	± 0.10mm
W	Overall width of the carrier tape	44.0mm	± 0.30mm
P	Pitch between successive cavity centers	20.0mm	± 0.10mm

Radiocontrolli s.r.l refuses any responsibility for irregular uses of the devices and for any possible lack or inaccuracy of the data and reserves the right to change in whole or in part these information without notice.