Pulse
A YAGEO Company

RF Chip Inductors

Wire-Wound - 0402, 0603, 0805, 1008, 1206

RoHS COMPLIANT

Pulse Electronics - leading supplier of magnetics for consumer applications

Table of Contents

The 0402 to 1206 series range of Miniature Chip Inductors contains the very latest in wire-wound technology and Ceramic or Ferrite Core, thus providing the ultimate in performance demanded by today's Wireless products. The Inductors provide high Q and SRFs in an industry standard size and footprint. Pulse chip inductors manufactured after February 2005 are in compliance with RoHS requirements.

Part Number Legend 2

Selection Guide 3

Performance Specifications

- Environmental Testing 4
- Mechanical Testing 4-5
- Tape and Reel Specification 5

Miniature Wire-wound RF Chip Inductors

- 0402CD Series 6-7
- 0603CD Series 8-10
- 0805CD Series 11-13
- 0805CM Series 14-15
- 0805FT Series 16-17
- 1008CD Series 18-20
- 1008CM Series 21-22
- 1008CQ Series 23-24
- 1206CD Series 25-27

PART NUMBER LEGEND

PE — 0805 CD 121 K T T

PACKAGE STYLE
(0402, 0603, 0805, 1008, or 1206)

CORE MATERIAL
C = Ceramic (Alumina) **CQ** = High Q
CD = Standard range **FT** = Ferrite
CM = Alternative performance/inductance to CD

INDUCTANCE (µH)
Representative of the inductance value

TOLERANCE
G = ±2% **K** = ±10%
J = ±5%

PACKAGING (T = Tape & Reel: 7" or 13" reel)

Size	0402	0603	0805	1008	1206
PCs/Reel	3000	2000	2000	1600	3000

TERMINATION
T = Gold or Tin plating (Gold plating is priority)
G = Gold plating only
S = Tin plating only

WIRE-WOUND RF CHIP INDUCTORS

SELECTION GUIDES

Electrical Specifications

Part Number	Size	Construction	Inductance (nH)
0402CD	0402	Wirewound	1.0 to 120
0603CD	0603	Wirewound	1.6 to 390
0805CD	0805	Wirewound	2.8 to 1500
0805CM	0805	Wirewound	3.3 to 820
0805FT	0805	Wirewound	1000 to 68000
1008CD	1008	Wirewound	9.7 to 8200
1008CM	1008	Wirewound	10 to 4700
1008CQ	1008	Wirewound	4.1 to 390
1206CD	1206	Wirewound	3.3 to 1200

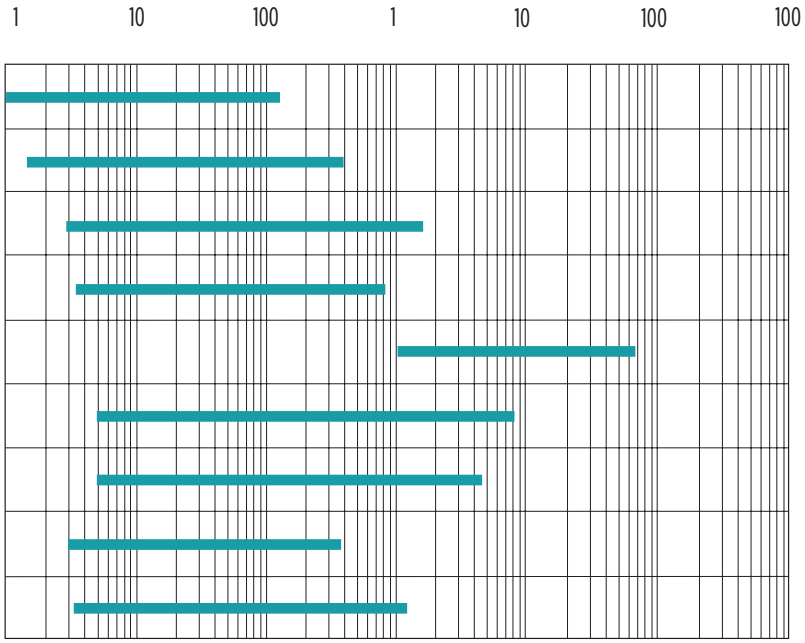

CD Series: Standard 100% compatible with other market leaders.
CM Series: Offers improved electrical performance or alternative inductance values to Pulse CD series.
CQ Series: Offers high Q and high Idc series.
FT Series: Ferrite core offers higher inductance values.

Competition Cross Reference

		Pulse Wire-Wound Inductors						
Type	**Competition**	**0402CD**	**0603CD**	**0805CD**	**0805FT**	**1008CQ**	**1008CD**	**1206CD**
	Coilcraft	0402CS	0603CS	0805CS/ HS/HT		1008HQ	1008CS/ HT/CT	1206CS
	Murata			LQW1608A			LQN21A	
	Taiyo Yuden			LB2012T			LEM_2520T	
	TDK				NL2016		NLH2520	

*Table for "SMD Antennas for Wireless Devices" continued on next page ➔

PERFORMANCE TESTING

Electrical Testing

Storage and Operating Temperature Range: **-40˚ to +125˚C**	Inductors are subjected to the extremes for 48 hours. Then tested at 25˚C	There shall be no deformation or change in appearance Inductance shall not change by more than ±5% Q values shall not change by more than ±10%
Thermal: **-40˚ to +85˚C**	Inductors are subjected to 30 cycles for 30 minutes at each extreme. Then tested at 25˚C	
Moisture Resistance	Inductors are subjected to 10 cycles of 24 hours at 70˚C with 90 to 95% Relative Humidity Then tested at 25˚C	
Operating Life	Inductors are subjected to 1000 hours at 85C with 85% Relative Humidity with the rated current applied	There shall be no Damaged, Open or Shorted Windings

Mechanical Testing

Temperature Range:	Inductors are subjected to the following: Use a solder pot at 260C, with RMA Flux. Each termination is immersed in 63Sn/37Pb molten solder for 4 to 6 seconds.	There shall be no deformation or change in appearance Inductance shall not change by more than ±5% Q values shall not change by more than ±10%
Recommended Solder Heat Resistance Profile	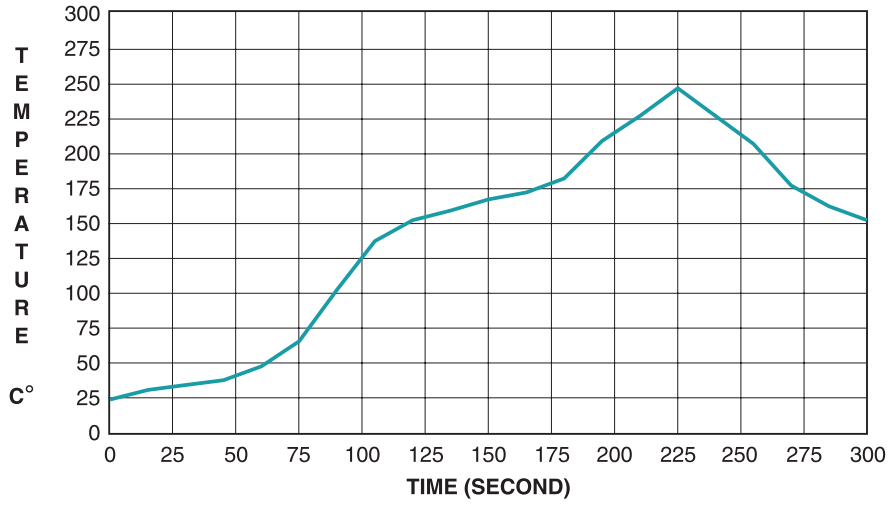	

Pulse A YAGEO Company

PERFORMANCE SPECIFICATIONS

Electrical Specifications		
Vibration (Random)	Samplers are subjected to random vibrations as per NAVMAT P9492	There shall be no deformation or change in appearance Inductance shall not change by more than ±5% Q values shall not change by more than ±10%
Mechanical Shock	Inductors are subjected to one half sine wave pulse (8700 g's for 0.3ms) in each directional axis for a total of 18 shocks	
Moisture Resistance	Reflow Inductors on to test pads using 63 Sn/37 Pb solder paste (IR Reflow profile = 200˚C for 30 seconds or peak 235˚C for 20 seconds)	The inductors shall withstand a minimum force of 1000 g's in any direction usin a dynamometer force guage.

Tape and Reel Specifications

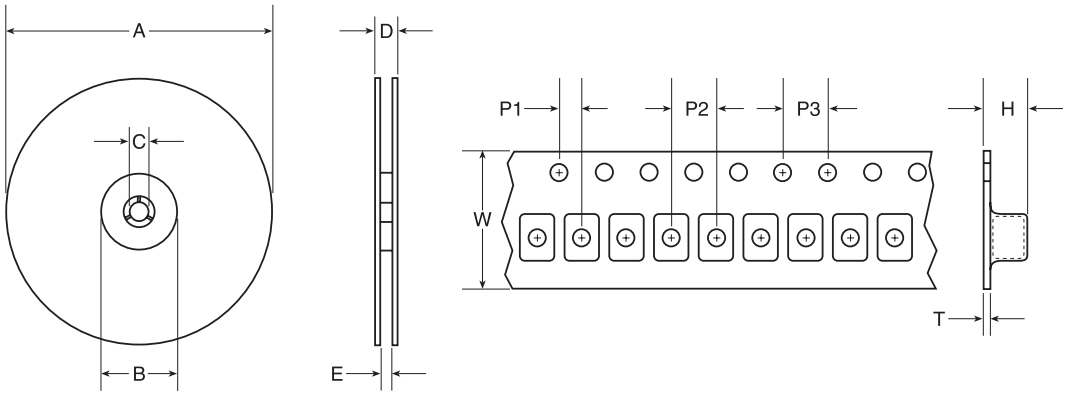

Electrical Specifications @ 25ºC - Operating Temperature -40ºC to +125ºC

Series	Parts per Reel	Reels Dimensions (mm)					Tape Dimensions (mm)					
		A	B	C	D	E	W	P1	P2	P3	H	T
0402CD	3000	178	50	13	14.4	8.4	8	2	4	4	1.1	0.3
0603CD	2000	178	50	13	14.4	8.4	8	2	4	4	1.7	0.3
0805CD	2000	178	50	13	14.4	8.4	8	2	4	4	2.1	0.3
0805CM	2000	178	50	13	14.4	8.4	8	2	4	4	2.1	0.3
0805FT	2000	178	50	13	14.4	8.4	8	2	4	4	2.1	0.3
1008CD	1600	178	50	13	14.4	8.4	8	2	4	4	2.6	0.3
1008CM	1600	178	50	13	14.4	8.4	8	2	4	4	2.6	0.3
1008CQ	1600	178	50	13	14.4	8.4	8	2	4	4	2.6	0.3
1206CD	3000	330	101	13	18.4	12.4	12	2	4	4	2.0	0.4

Notes: P1, P2 and P3 are same for all chip inductor series. Keeping the same dimensions for guide hole and pocket pitch (P1), pocket pitch (P2), guide hold pitch (P3) and tape width (8mm) for all series, enables the packaging machine to maintain the same settings while changing models. The only difference between the series are the parts per reel which contributes to a different length of tapes/reel per model.

WIRE-WOUND RF CHIP INDUCTORS - 0402CD SERIES

- *Wirewound ceramic core construction*
- *High Q values*
- *High self resonant frequency*
- *Industry standard 0402 (1005) surface mount land pattern*

Electrical Specifications @ 25°C							
Part Number	**Inductance 1** (nH)	**Standard Tolerance**	**Optional Tolerance**	**Q** (MIN)	**SRF** (MHz MIN)	**Rdc** (MHz MIN)	**Ω MAX** (mA MAX)
PE-0402CD1N0JTG	1.0 @ 250MHz	±5%		13 @ 250MHz	6000	0.045	1360
PE-0402CD3N3JTT	3.3 @ 250MHz	±5%		20 @ 250MHz	6000	0.066	840
PE-0402CD3N6JTT	3.6 @ 250MHz	±5%	±10% (K)	20 @ 250MHz	6000	0.066	840
PE-0402CD3N9JTT	3.9 @ 250MHz	±5%	±10% (K)	20 @ 250MHz	5800	0.083	840
PE-0402CD5N1JTT	5.1 @ 250MHz	±5%		23 @ 250MHz	5800	0.083	800
PE-0402CD5N6JTG	5.6 @ 250MHz	±5%		23 @ 250MHz	5800	0.083	760
PE-0402CD6N2JTT	6.2 @ 250MHz	±5%	±10% (K)	20 @ 250MHz	5800	0.083	760
PE-0402CD6N8JTT	6.8 @ 250MHz	±5%	±10% (K)	25 @ 250MHz	5800	0.083	680
PE-0402CD7N5JTG	7.5 @ 250MHz	±5%	±10% (K)	25 @ 250MHz	5800	0.104	680
PE-0402CD8N2JTT	8.2 @ 250MHz	±5%		21 @ 250MHz	4400	0.104	680
PE-0402CD9N0JTG	9.0 @ 250MHz	±5%		21 @ 250MHz	4160	0.104	680
PE-0402CD100JTT	10 @ 250MHz	±5%	±10% (K), ±2% (G)	21 @ 250MHz	3900	0.195	480
PE-0402CD110JTT	11 @ 250MHz	±5%		26 @ 250MHz	3680	0.120	640
PE-0402CD120JTT	12 @ 250MHz	±5%		26 @ 250MHz	3600	0.120	640
PE-0402CD150JTT	15 @ 250MHz	±5%	±10% (K), ±2% (G)	26 @ 250MHz	3280	0.172	560
PE-0402CD180JTG	18 @ 250MHz	±5%	±10% (K)	26 @ 250MHz	3100	0.230	520
PE-0402CD190JTT	19 @ 250MHz	±5%		26 @ 250MHz	3040	0.202	480
PE-0402CD200GTT	20 @ 250MHz	±2%		26 @ 250MHz	3000	0.250	480
PE-0402CD220JTG	22 @ 250MHz	±5%		26 @ 250MHz	2800	0.300	400
PE-0402CD230JTT	23 @ 250MHz	±5%		26 @ 250MHz	2720	0.214	400
PE-0402CD240GTT	24 @ 250MHz	±2%		26 @ 250MHz	2700	0.300	400
PE-0402CD270JTT	27 @ 250MHz	±5%		25 @ 250MHz	248	0.298	400
PE-0402CD330JTG	33 @ 250MHz	±5%		26 @ 250MHz	2350	0.350	350
PE-0402CD360GTG	36 @ 250MHz	±2%		25 @ 250MHz	2320	0.403	320
PE-0402CD400JTG	40 @ 250MHz	±5%		25 @ 250MHz	2240	0.438	320
PE-0402CD470JTT	47 @ 250MHz	±5%		25 @ 250MHz	2100	0.830	100
PE-0402CD680JTT	68 @ 250MHz	±5%	±10% (K)	16 @ 250MHz	1840	0.970	100
PE-0402CD820JTT	82 @ 250MHz	±5%		16 @ 250MHz	1680	1.250	100
PE-0402CD101JTT	100 @ 250MHz	±5%		16 @ 250MHz	1620	2.600	100
PE-0402CD121JTT	120 @ 250MHz	±5%	±5% (J)	14 @ 250MHz	1520	2.700	90

WIRE-WOUND RF CHIP INDUCTORS - 0402CD SERIES

Notes:

1. Inductance measured using a HP4286A RF Impedance Analyzer. (Please note that inductance information is not stamped on part, because of the extremely small size).
2. Q measured using a HP4291A RF Impedance Analyzer with a HP16193A Test Fixture.
3. SRF measured using a HP8753C Network Analyzer.
4. R_{DC} measured using a Valhalla Scientific model 4100 ATC Digital Ohmeter.
5. Based on a 15˚C maximum temperature rise.
6. Component Weight: 0.002 grams typical.

Typical Q vs Frequency

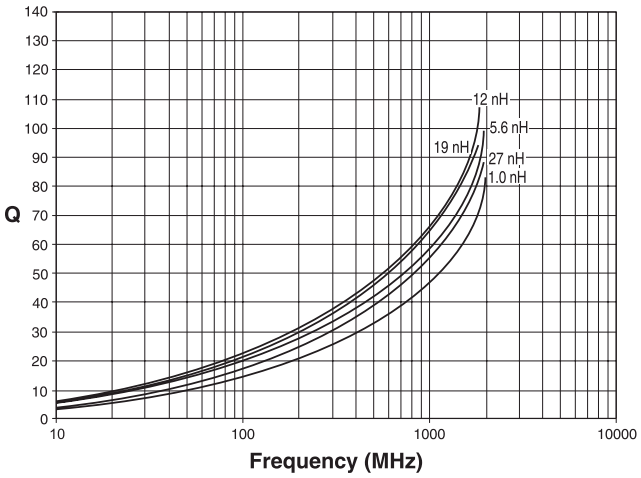

Typical Inductance vs Frequency

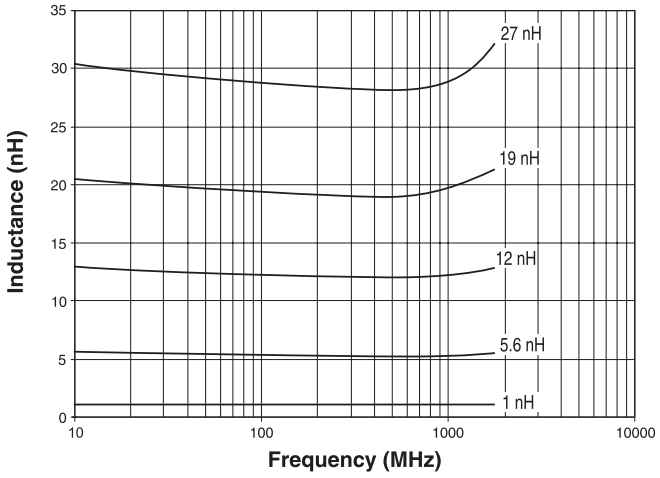

Mechanical

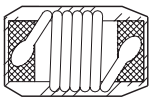

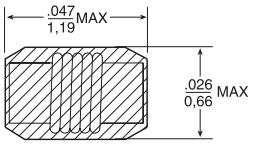

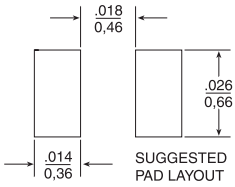

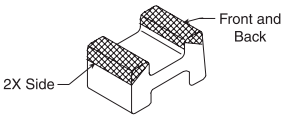

Pictorial view of core (for reference only)

Weight 0.002grams
Tape & Reel 3000/reel
Dimensions: Inches / mm

Unless otherwise specified, all tolerances are ± .010 / 0,25

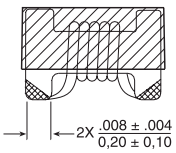

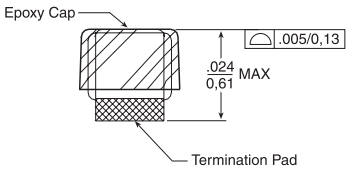

WIRE-WOUND RF CHIP INDUCTORS - 0603CD SERIES

- *Wirewound ceramic core construction*
- *High Q values*
- *High self resonant frequency*
- *Industry standard 0603 (1608) surface mount land pattern*

See page 3 for Competition Cross Reference

Electrical Specifications @ 25°C							
Part Number	Inductance[1] (nH)	Standard Tolerance	Optional Tolerance	Q[2] (MIN)	SRF[3] (MHz MIN)	RDC[4] (Ω MAX)	IDC[5] (mA MAX)
PE-0603CD1N6KTT	1.6 @ 250MHz	±10%		24 @ 250MHz	6000.0	0.03	700.0
PE-0603CD010KTT	1.7 @ 250MHz	±10%		16 @ 250MHz	6000.0	0.05	700.0
PE-0603CD1N8JTT	1.8 @ 250MHz	±5%		16 @ 250MHz	6000.0	0.05	700.0
PE-0603CD2N2KTT	2.2 @ 250MHz	±10%		18 @ 250MHz	6000.0	0.11	700.0
PE-0603CD3N6JTT	3.6 @ 250MHz	±5%		20 @ 250MHz	6000.0	0.07	700.0
PE-0603CD030JTT	3.9 @ 250MHz	±5%	±10% (K)	20 @ 250MHz	6000.0	0.08	700.0
PE-0603CD4N3JTT	4.3 @ 250MHz	±5%		20 @ 250MHz	6000.0	0.10	700.0
PE-0603CD040JTT	4.55 @ 250MHz	±5%	±10% (K)	20 @ 250MHz	5800.0	0.11	700.0
PE-0603CD4N7JTT	4.7 @ 250MHz	±5%	±2% (G)	20 @ 250MHz	5800.0	0.12	700.0
PE-0603CD5N1JTT	5.1 @ 250MHz	±5%	±2% (G)	20 @ 250MHz	5700.0	0.11	700.0
PE-0603CD5N6GTT	5.6 @ 250MHz	±2%	±10% (K)	25 @ 250MHz	5500.0	0.11	700.0
PE-0603CD6N2JTT	6.2 @ 250MHz	±5%	±2% (G)	25 @ 250MHz	5800.0	0.11	700.0
PE-0603CD060JTT	6.68 @ 250MHz	±5%	±10% (K), ±2% (G)	25 @ 250MHz	5800.0	0.11	700.0
PE-0603CD6N8JTT	6.8 @ 250MHz	±5%	±2% (G)	27 @ 250MHz	5800.0	0.12	700.0
PE-0603CD7N5GTT	7.5 @ 250MHz	±2%		28 @ 250MHz	4800.0	0.12	700.0
PE-0603CD080JTT	8.2 @ 250MHz	±5%	±10% (K), ±2% (G)	30 @ 250MHz	4600.0	0.12	700.0
PE-0603CD8N7JTT	8.7 @ 250MHz	±5%	±2% (G)	28 @ 250MHz	4600.0	0.11	700.0
PE-0603CD9N5GTT	9.5 @ 250MHz	±2%	±10% (K)	28 @ 250MHz	5400.0	0.14	700.0
PE-0603CD100JTT	10 @ 250MHz	±5%	±2% (G)	30 @ 250MHz	4800.0	0.13	700.0
PE-0603CD110GTT	11 @ 250MHz	±2%	±10% (K)	30 @ 250MHz	4000.0	0.09	700.0
PE-0603CD120JTT	12 @ 250MHz	±5%	±10% (K), ±2% (G)	30 @ 250MHz	4000.0	0.13	700.0
PE-0603CD130JTT	13 @ 250MHz	±5%	±10% (K), ±2% (G)	38 @ 250MHz	3600.0	0.11	700.0
PE-0603CD150JTT	15 @ 250MHz	±5%	±10% (K), ±2% (G)	30 @ 250MHz	4000.0	0.17	700.0
PE-0603CD160JTT	16 @ 250MHz	±5%	±2% (G)	35 @ 250MHz	3300.0	0.17	700.0
PE-0603CD180JTT	18 @ 250MHz	±5%	±10% (K), ±2% (G)	35 @ 180MHz	3100.0	0.17	700.0
PE-0603CD220JTT	22 @ 250MHz	±5%	±10% (K), ±2% (G)	35 @ 250MHz	3000.0	0.19	700.0
PE-0603CD230GTT	23 @ 250MHz	±2%		38 @ 250MHz	2850.0	0.19	700.0
PE-0603CD240JTT	24 @ 250MHz	±5%	±10% (K), ±2% (G)	35 @ 250MHz	2650.0	0.20	600.0

(Continued on next page)

WIRE-WOUND RF CHIP INDUCTORS - 0603CD SERIES

Electrical Specifications @ 25°C (continued)							
Part Number	**Inductance**[1] (nH)	**Standard Tolerance**	**Optional Tolerance**	**Q**[2] (MIN)	**SRF**[3] (MHz MIN)	**RDC**[4] (Ω MAX)	**IDC**[5] (mA MAX)
PE-0603CD270JTT	27 @ 250MHz	±5%	±10% (K), ±2% (G)	35 @ 250MHz	2800.0	0.22	600.0
PE-0603CD300JTT	30 @ 250MHz	±5%	±10% (K), ±2% (G)	37 @ 250MHz	2250.0	0.14	600.0
PE-0603CD330JTT	33 @ 250MHz	±5%	±10% (K), ±2% (G)	35 @ 250MHz	2300.0	0.22	600.0
PE-0603CD360GTT	36 @ 250MHz	±2%		37 @ 250MHz	2080.0	0.25	600.0
PE-0603CD390JTT	39 @ 250MHz	±5%	±10% (K), ±2% (G)	35 @ 250MHz	2200.0	0.25	600.0
PE-0603CD430GTT	43 @ 250MHz	±2%		35 @ 250MHz	2000.0	0.28	600.0
PE-0603CD470JTT	47 @ 200MHz	±5%	±10% (K), ±2% (G)	35 @ 200MHz	2000.0	0.28	600.0
PE-0603CD510GTT	51 @ 200MHz	±2%		35 @ 200MHz	1900.0	0.27	600.0
PE-0603CD560JTT	56 @ 200MHz	±5%	±10% (K), ±2% (G)	35 @ 200MHz	1900.0	0.31	600.0
PE-0603CD680JTT	68 @ 200MHz	±5%	±10% (K), ±2% (G)	35 @ 200MHz	1700.0	0.34	600.0
PE-0603CD720GTT	72 @ 150MHz	±2%	±10% (K)	34 @ 150MHz	1700.0	0.49	400.0
PE-0603CD820JTT	82 @ 150MHz	±5%	±10% (K), ±2% (G)	34 @ 150MHz	1700.0	0.54	400.0
PE-0603CD101JTT	98.50 @ 150MHz	±5%	±10% (K), ±2% (G)	34 @ 150MHz	1400.0	0.58	400.0
PE-0603CDR10JTT	100 @ 150MHz	±5%	±10% (K), ±2% (G)	34 @ 150MHz	1400.0	0.58	400.0
PE-0603CD111JTT	110 @ 150MHz	±5%	±10% (K), ±2% (G)	33 @ 150MHz	1300.0	0.61	300.0
PE-0603CDR12JTT	120 @ 150MHz	±5%	±10% (K), ±2% (G)	32 @ 150MHz	1300.0	0.65	300.0
PE-0603CD121JTT	122 @ 150MHz	±5%	±10% (K), ±2% (G)	33 @ 150MHz	1300.0	0.65	300.0
PE-0603CD151JTT	150 @ 150MHz	±5%	±10% (K), ±2% (G)	28 @ 150MHz	990.0	0.92	280.0
PE-0603CD181JTT	180 @ 100MHz	±5%	±10% (K), ±2% (G)	25 @ 100MHz	990.0	1.25	240.0
PE-0603CD201GTT	200 @ 250MHz	±2%		25 @ 100MHz	900.0		
PE-0603CD211JTT	210 @ 100MHz	±5%	±2% (G)	27 @ 100MHz	895.0	2.06	220.0
PE-0603CD221JTT	220 @ 100MHz	±5%	±10% (K), ±2% (G)	25 @ 100MHz	900.0	1.90	200.0
PE-0603CD251GTT	250 @ 100MHz	±2%		25 @ 100MHz	822.0	3.55	180.0
PE-0603CD271JTT	270 @ 100MHz	±5%	±10% (K), ±2% (G)	24 @ 100MHz	860.0	2.30	170.0
PE-0603CD331JTT	330 @ 100MHz	±5%	±10% (K)	22 @ 100MHz	500.0	2.300	150.0
PE-0603CD391JTT	390 @ 100MHz	±5%	±10% (K)	20 @ 250 MHz	350.0	2.90	130.0

Notes:

1. Inductance measured using a HP4286A RF Impedance Analyzer. (Please note that inductance information is not stamped on part, because of the extremely small size).
2. Q measured using a HP4291A RF Impedance Analyzer with a HP16193A Test Fixture.
3. SRF measured using a HP8753C Network Analyzer.
4. RDC measured using a Valhalla Scientific model 4100 ATC Digital Ohmeter.
5. Based on a 15°C maximum temperature rise.
6. 5-sides o top side epoxy cap.

(Continued on next page)

WIRE-WOUND RF CHIP INDUCTORS - 0603CD Series

Typical Q vs Frequency

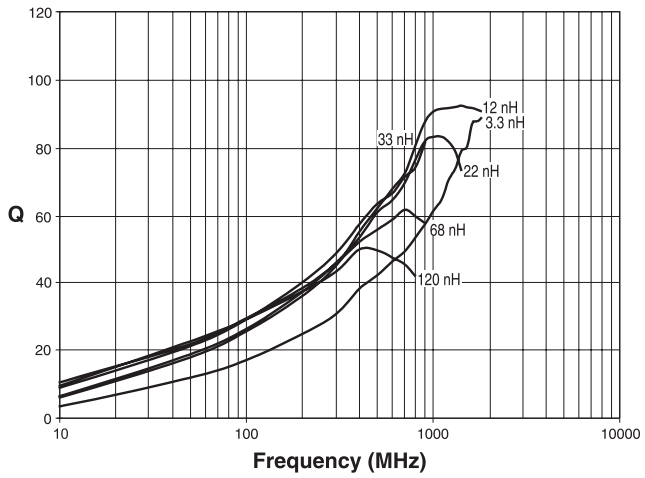

Typical Inductance vs Frequency

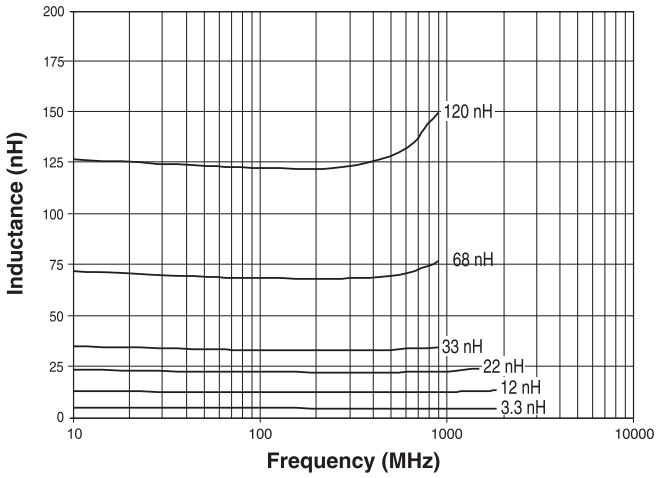

Mechanical

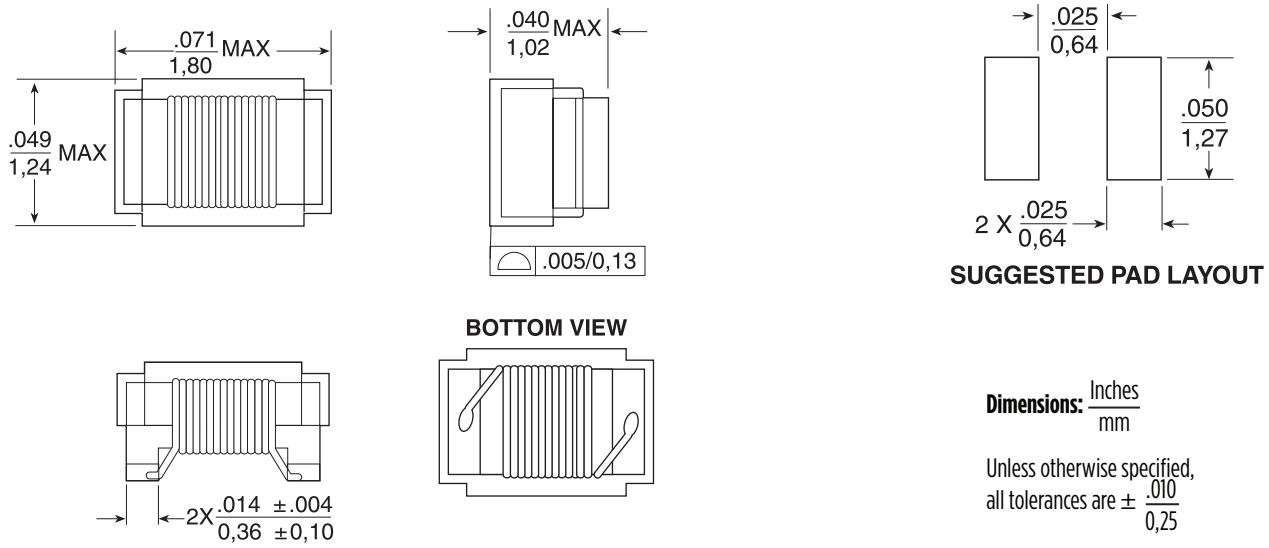

Pulse A YAGEO Company

WIRE-WOUND RF CHIP INDUCTORS - 0805CD SERIES

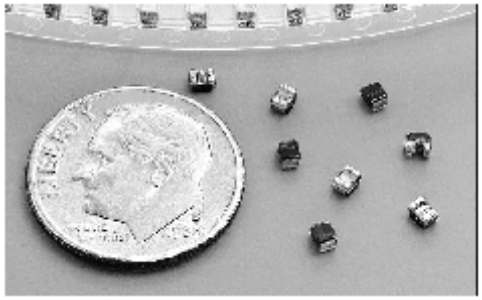

- *Wirewound ceramic core construction*
- *High Q values*
- *High self resonant frequency*
- *Industry standard 0805 (2012) surface mount land pattern*

See page 3 for Competition Cross Reference

Electrical Specifications @ 25°C							
Part Number	**Inductance**[1] (nH)	**Standard Tolerance**	**Optional Tolerance**	**Q**[2] (MIN)	**SRF**[3] (MHz MIN)	**RDC**[4] (Ω MAX)	**IDC**[5] (mA MAX)
PE-0805CD2N8KTT	2.8 @ 250MHz	±10% (K)		80 @ 1500MHz	>6000	0.06	600
PE-0805CD3N0KTT	3.0 @ 250MHz	±10% (K)	±5% (J)	65 @ 1500MHz	>6000	0.06	600
PE-0805CD030KTT	3.32 @ 250MHz	±10% (K)	±5% (J)	40 @ 1500MHz	6000	0.08	600
PE-0805CD050KTT	5.6 @ 250MHz	±5% (J)		50 @ 1500MHz	5500	0.10	600
PE-0805CD060KTT	6.5 @ 250MHz	±10% (K)		50 @ 1000MHz	5000	0.11	600
PE-0805CD7N5KTT	7.5 @ 250MHz	±10% (K)	±5% (J), ±2% (G)	50 @ 1000MHz	4500	0.14	600
PE-0805CD080KTT	7.9 @ 250MHz	±10% (K)	±5% (J), ±2% (G)	50 @ 1000MHz	4700	0.12	600
PE-0805CD100KTT	10.2 @ 250MHz	±10% (K)	±5% (J), ±2% (G)	50 @ 500MHz	4100	0.14	600
PE-0805CD120KTT	11.9 @ 250MHz	±10% (K)	±5% (J), ±2% (G)	50 @ 500MHz	4000	0.15	600
PE-0805CD150KTT	14.9 @ 250MHz	±10% (K)	±5% (J), ±2% (G)	50 @ 500MHz	3400	0.17	600
PE-0805CD180KTT	17.95 @ 250MHz	±10% (K)	±5% (J), ±2% (G)	50 @ 500MHz	3300	0.20	600
PE-0805CD220KTT	21.7 @ 250MHz	±10% (K)	±5% (J), ±2% (G)	55 @ 500MHz	2600	0.22	500
PE-0805CD240KTT	24 @250MHz	±5% (J)		50 @ 500MHz	2000	0.22	500
PE-0805CD270KTT	26.5 @ 250MHz	±10% (K)	±5% (J), ±2% (G)	55 @ 500MHz	2500	0.25	500
PE-0805CD330KTT	32.75 @ 250MHz	±10% (K)	±5% (J), ±2% (G)	60 @ 500MHz	2050	0.27	500
PE-0805CD360KTT	36 @ 250MHz	±10% (K)	±5% (J), ±2% (G)	55 @ 500MHz	1700	0.27	500
PE-0805CD390KTT	38.5 @ 250MHz	±10% (K)	±5% (J), ±2% (G)	60 @ 500MHz	2000	0.29	500
PE-0805CD430KTT	43 @ 200MHz	±5% (J)	±2% (G)	60 @ 500MHz	1650	0.34	500
PE-0805CD470KTT	46.6 @ 200MHz	±10% (K)	±5% (J), ±2% (G)	60 @ 500MHz	1650	0.31	500
PE-0805CD560KTT	55.5 @ 200MHz	±10% (K)	±5% (J), ±2% (G)	60 @ 500MHz	1550	0.34	500
PE-0805CD680KTT	67.8 @ 200MHz	±10% (K)	±5% (J), ±2% (G)	60 @ 500MHz	1450	0.38	500
PE-0805CD820KTT	82.7 @ 150MHz	±10% (K)	±5% (J), ±2% (G)	60 @ 500MHz	1300	0.42	400
PE-0805CD910KTT	91 @ 150MHz	±10% (K)	±5% (J), ±2% (G)	65 @ 500MHz	1200	0.44	400
PE-0805CD101KTT	98.7 @ 150MHz	±10% (K)	±5% (J), ±2% (G)	60 @ 500MHz	1200	0.46	400
PE-0805CD111KTT	110 @ 150MHz	±5% (J)	±2% (G)	50 @ 250MHz	1000	0.48	400

(Continued on next page)

WIRE-WOUND RF CHIP INDUCTORS - 0805CD Series

Electrical Specifications @ 25°C (continued)							
Part Number	Inductance[1] (nH)	Standard Tolerance	Optional Tolerance	Q[2] (MIN)	SRF[3] (MHz MIN)	RDC[4] (Ω MAX)	IDC[5] (mA MAX)
PE-0805CD121KTT	119.7 @ 150MHz	±10% (K)	±5% (J), ±2% (G)	50 @ 250MHz	1100	0.51	400
PE-0805CD151KTT	149.4 @ 100MHz	±10% (K)	±5% (J), ±2% (G)	50 @ 250MHz	920	0.56	400
PE-0805CD181KTT	179.6 @ 100MHz	±10% (K)	±5% (J), ±2% (G)	50 @ 250MHz	870	0.64	400
PE-0805CD221KTT	217 @ 100MHz	±10% (K)	±5% (J), ±2% (G)	45 @ 250MHz	850	0.70	400
PE-0805CD241KTT	240 @ 100MHz	±5% (J)	±2% (G)	44 @ 250MHz	690	1.00	350
PE-0805CD271KTT	269 @ 100MHz	±10% (K)	±5% (J), ±2% (G)	45 @ 250MHz	650	1.00	350
PE-0805CD331KTT	331 @ 100MHz	±10% (K)	±5% (J), ±2% (G)	45 @ 250MHz	600	1.40	310
PE-0805CD391KTT	386 @ 50MHz	±10% (K)	±5% (J), ±2% (G)	35 @ 250MHz	560	1.50	290
PE-0805CD471KTT	477 @ 25MHz	±10% (K)	±5% (J), ±2% (G)	33 @ 100MHz	375	1.76	250
PE-0805CD561KTT	545 @ 250MHz	±10% (K)	±5% (J), ±2% (G)	23 @ 50MHz	340	1.90	230
PE-0805CD681KTT	674 @ 25MHz	±10% (K)	±5% (J), ±2% (G)	23 @ 50MHz	188	2.20	190
PE-0805CD821KTT	783 @ 25MHz	±5% (J)	±2% (G)	23 @ 50MHz	215	2.35	180
PE-0805CD102KTT	1000 @25MHz	±5% (J)	±2% (G)	20 @ 50MHz	200	3.60	150
PE-0805CD122KTT	1200 @ 25MHz	±5% (J)	±2% (G)	20 @ 50MHz	200	4.10	120
PE-0805CD152KTT	1500 @ 25MHz	±10% (K)	±5% (J), ±2% (G)	20 @ 50MHz	200	5.00	100

***** For other inductance values in 0805 size, please refer to 0805CM (page 14) an 0805FT (page 16). *****

Notes:

1. Inductance measured using a HP4286A RF Impedance Analyzer. (Please note that inductance information is not stamped on part, because of the extremely small size).
2. Q measured using a HP4291A RF Impedance Analyzer with a HP16193A Test Fixture.
3. SRF measured using a HP8753C Network Analyzer.
4. RDC measured using a Valhalla Scientific model 4100 ATC Digital Ohmeter.
5. Based on a 15°C maximum temperature rise.

Typical Q vs Frequency

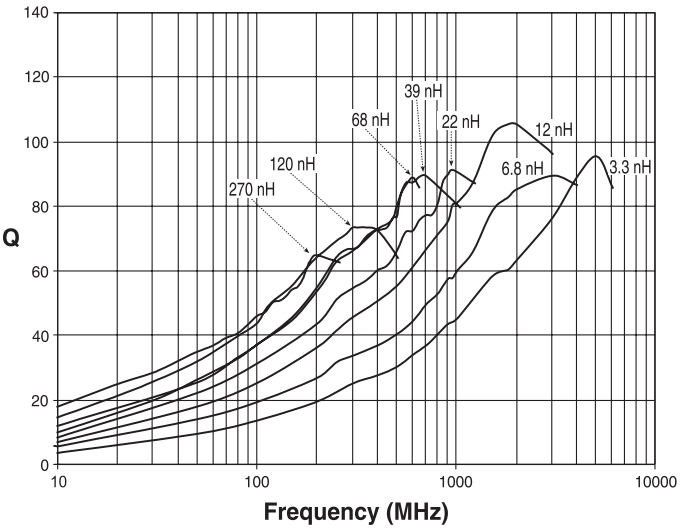

Typical Inductance vs Frequency

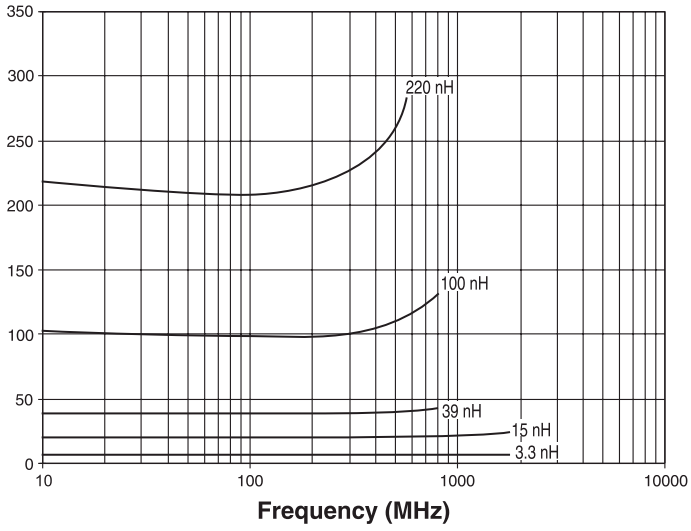

Pulse A YAGEO Company

Mechanical

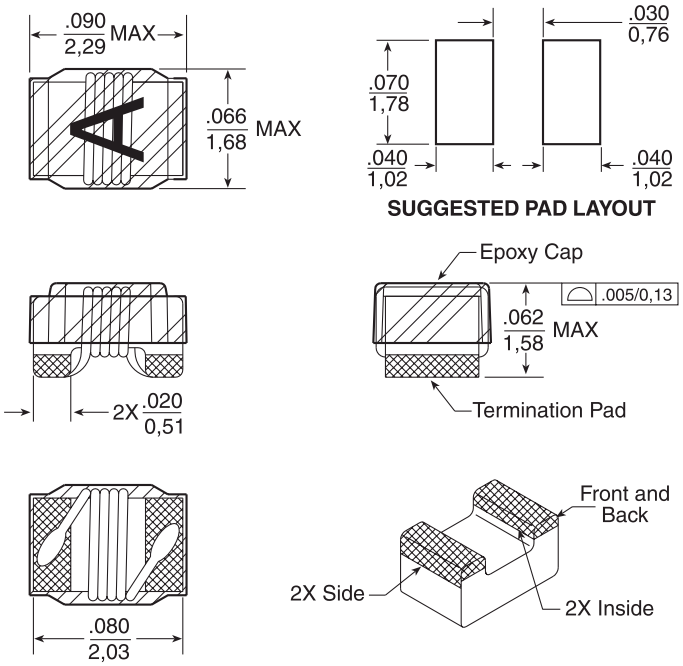

Weight 0.012grams
Tape & Reel 2000/reel
Dimensions: Inches / mm

Unless otherwise specified, all tolerances are ± .010 / 0,25

WIRE-WOUND RF CHIP INDUCTORS - 0805CM SERIES

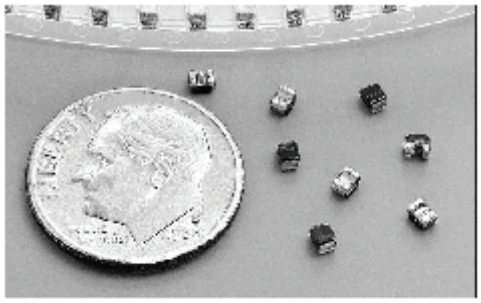

- *Wirewound ceramic core construction*
- *High Q values*
- *High self resonant frequency*
- *Industry standard 0805 (2012) surface mount land pattern*

See page 3 for Competition Cross Reference

Electrical Specifications @ 25°C							
Part Number	Inductance[1] (nH)	Standard Tolerance	Optional Tolerance	Q[2] (MIN)	SRF[3] (MHz MIN)	RDC[4] (Ω MAX)	IDC[5] (mA MAX)
PE-0805CM030KTT	3.3 @ 250MHz	±10% (K)	±5% (J)	37 @ 1500MHz	5000	0.08	600
PE-0805CM060KTT	6.8 @ 250MHz	±10% (K)	±5% (J), ±2% (G)	46 @ 1000MHz	5000	0.15	600
PE-0805CM080KTT	8.2 @ 250MHz	±5% (J)	±2% (G)	47 @ 1000MHz	3900	0.13	600
PE-0805CM100KTT	10 @ 250MHz	±10% (K)	±5% (J), ±2% (G)	60 @ 500MHz	3900	0.10	600
PE-0805CM120KTT	12 @ 250MHz	±10% (K)	±5% (J), ±2% (G)	50 @ 500MHz	2900	0.13	600
PE-0805CM150KTT	15 @ 250MHz	±10% (K)	±5% (J), ±2% (G)	50 @ 500MHz	2700	0.15	600
PE-0805CM180KTT	18 @ 250MHz	±10% (K)	±5% (J), ±2% (G)	50 @500MHz	2600	0.13	600
PE-0805CM220KTT	22 @ 250MHz	±10% (K)	±5% (J), ±2% (G)	55 @ 500MHz	2200	0.13	500
PE-0805CM270KTT	27 @ 250MHz	±10% (K)	±5% (J)	55 @ 500MHz	2000	0.23	500
PE-0805CM330KTT	33 @ 250MHz	±10% (K)	±5% (J)	58 @ 500MHz	1800	0.18	500
PE-0805CM390KTT	39 @ 250MHz	±5% (J)		60 @ 500MHz	1600	0.23	500
PE-0805CM470KTT	47 @ 200MHz	±10% (K)	±5% (J)	60 @ 500MHz	1650	0.25	500
PE-0805CD560KTT	56 @200MHz	±10% (K)	±5% (J), ±2% (G)	60 @ 500MHz	1300	0.16	500
PE-0805CM680KTT	68 @ 200MHz	±5% (J)		60 @ 500MHz	1350	0.18	500
PE-0805CM820KTT	82 @ 150MHz	±5% (J)	±5% (J), ±2% (G)	60 @ 500MHz	1300	0.36	400
PE-0805CM101KTT	100 @ 150MHz	±10% (K)	±2% (G)	55 @ 500MHz	1100	0.36	400
PE-0805CM121KTT	120 @ 150MHz	±10% (K)	±5% (J), ±2% (G)	45 @ 250MHz	1100	0.56	350
PE-0805CM151KTT	150 @ 100MHz	±10% (K)	±5% (J), ±2% (G)	50 @ 250MHz	900	0.56	350
PE-0805CM181KTT	180 @ 100MHz	±10% (K)	±5% (J), ±2% (G)	50 @ 250MHz	875	0.69	300
PE-0805CM221KTT	220 @ 100MHz	±10% (K)	±5% (J), ±2% (G)	45 @ 250MHz	800	0.85	300
PE-0805CM271KTT	270 @ 100MHz	±5% (J)	±2% (G)	40 @ 100MHz	800	0.90	300
PE-0805CM331KTT	330 @ 100MHz	±10% (K)	±5% (J), ±2% (G)	40 @ 100MHz	775	1.28	300
PE-0805CM391KTT	390 @ 100MHz	±2% (G)		40 @ 100MHz	725	1.70	300
PE-0805CM471KTT	470 @ 100MHz	±10% (K)	±5% (J)	38 @ 100MHz	600	3.25	240
PE-0805CM561KTT	560 @ 100MHz	±10% (K)	±5% (J)	40 @ 100MHz	600	3.10	240
PE-0805CM681KTT	680 @ 50MHz	±10% (K)	±5% (J), ±2% (G)	32 @ 50MHz	550	3.50	240
PE-0805CM821KTT	820 @ 50MHz	±5% (J)		23 @ 50MHz	215	2.35	200

(Continued on next page)

Pulse A YAGEO Company

WIRE-WOUND RF CHIP INDUCTORS - 0805CM SERIES

Notes:

1. Inductance measured using a HP4286A RF Impedance Analyzer. (Please note that inductance information is not stamped on part, because of the extremely small size).
2. Q measured using a HP4291A RF Impedance Analyzer with a HP16193A Test Fixture.
3. SRF measured using a HP8753C Network Analyzer.
4. RDC measured using a Valhalla Scientific model 4100 ATC Digital Ohmeter.
5. Based on a 15˚C maximum temperature rise.

Typical Q vs Frequency

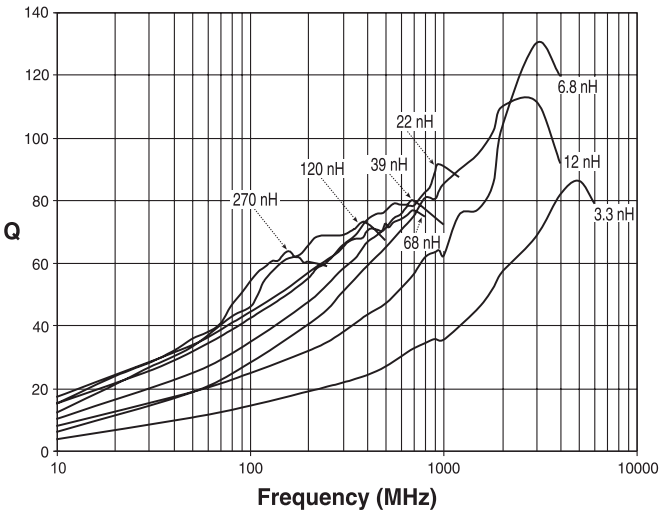

Typical Inductance vs Frequency

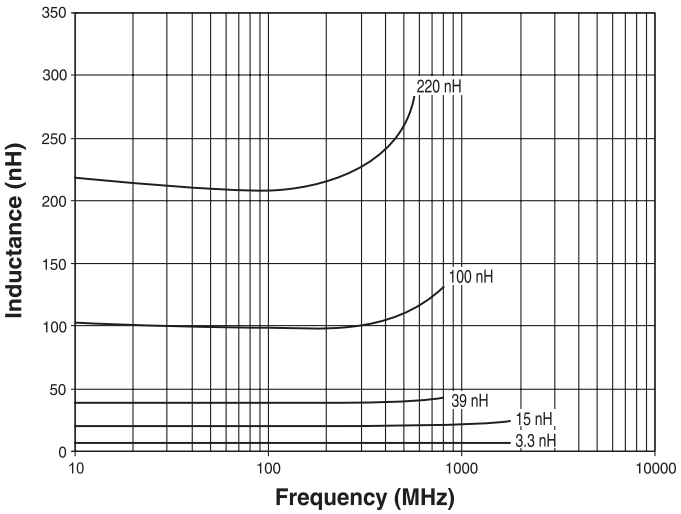

Mechanical

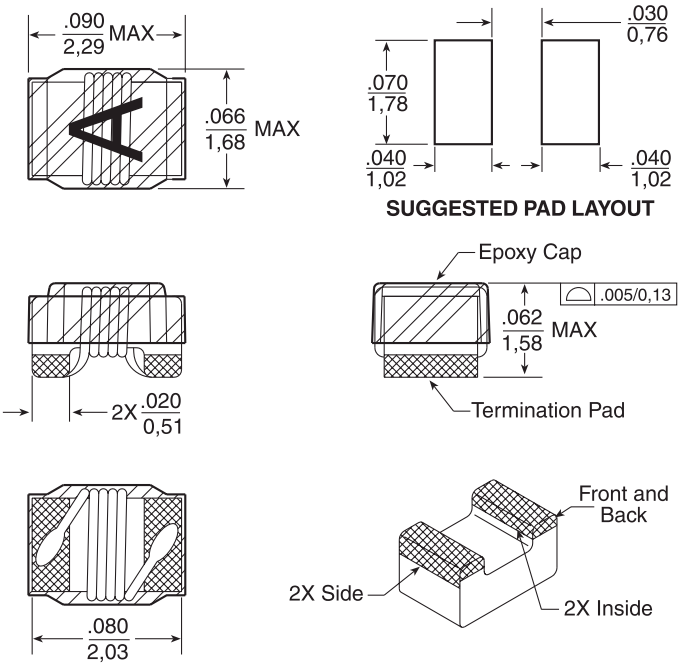

Weight 0.012grams
Tape & Reel 2000/reel
Dimensions: Inches / mm

Unless otherwise specified, all tolerances are ± .010 / 0,25

WIRE-WOUND RF CHIP INDUCTORS - 0805FT SERIES

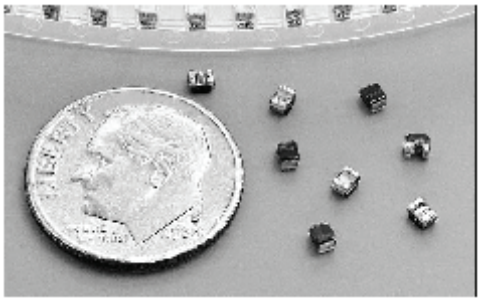

- *Wirewound ceramic core construction*
- *High Q values and resonant frequency*
- *Industry standard 0805 (2012) surface mount land pattern*

See page 3 for Competition Cross Reference

Electrical Specifications @ 25°C							
Part Number	Inductance[1] (nH)	Standard Tolerance	Optional Tolerance	Q[2] (MIN)	SRF[3] (MHz MIN)	RDC[4] (Ω MAX)	IDC[5] (mA MAX)
PE-0805FT102KTT	1.0 @ 7.96MHz	±5% (J)		15 @ 7.96MHz	63	1.20	245
PE-0805FT152KTT	1.5 @ 7.96MHz	±10% (K)	±5% (J)	15 @ 7.96MHz	60	1.45	225
PE-0805FT222KTT	2.2 @ 7.96MHz	±10% (K)	±5% (J)	15 @ 7.96MHz	58	1.80	200
PE-0805FT332KTT	3.3 @ 7.96MHz	±10% (K)	±5% (J)	15 @ 7.96MHz	50	2.30	175
PE-0805FT472KTT	4.7 @ 7.96MHz	±10% (K)	±5% (J)	15 @ 7.96MHz	43	2.80	140
PE-0805FT682KTT	6.8 @ 7.96MHz	±10% (K)	±5% (J)	15 @ 7.96MHz	36	3.40	115
PE-0805FT103KTT	10 @ 2.52MHz	±10% (K)	±5% (J)	10 @ 2.52MHz	30	4.70	98
PE-0805FT153KTT	15 @ 2.52MHz	±10% (K)	±5% (J)	10 @ 2.52MHz	23	6.50	80
PE-0805FT223KTT	22 @ 2.52MHz	±10% (K)	±5% (J)	10 @ 2.52MHz	20	8.00	68
PE-0805FT333KTT	33 @ 2.52MHz	±10% (K)	±5% (J)	10 @ 2.52MHz	17	10.70	60
PE-0805FT473KTT	47 @ 2.52MHz	±10% (K)	±5% (J)	10 @ 2.52MHz	14	13.80	55
PE-0805FT683KTT	68 @ 2.52MHz	±10% (K)	±5% (J)	8 @ 2.52MHz	11	17.50	49

Notes:

1. Inductance measured using a HP4286A RF Impedance Analyzer. (Please note that inductance information is not stamped on part, because of the extremely small size).
2. Q measured using a HP4291A RF Impedance Analyzer with a HP16193A Test Fixture.
3. SRF measured using a HP8753C Network Analyzer.
4. RDC measured using a Valhalla Scientific model 4100 ATC Digital Ohmeter.
5. Based on a 15°C maximum temperature rise.

Pulse A YAGEO Company

Typical Q vs Frequency

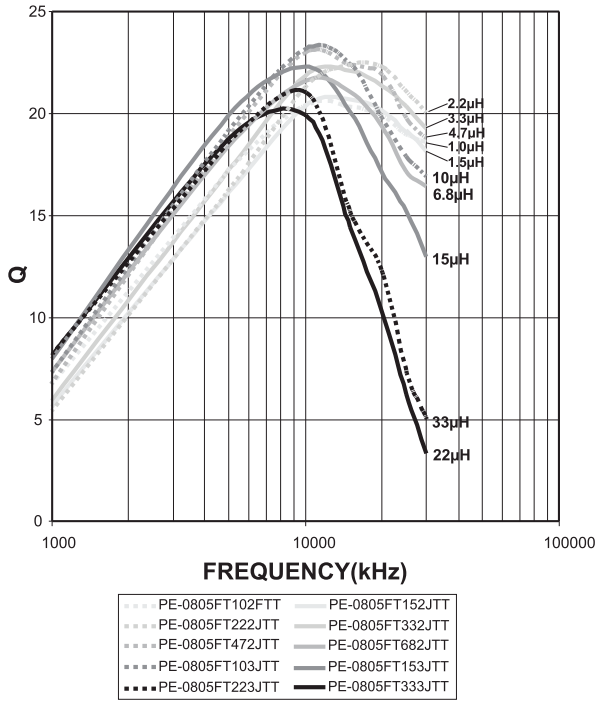

Typical Inductance vs Frequency

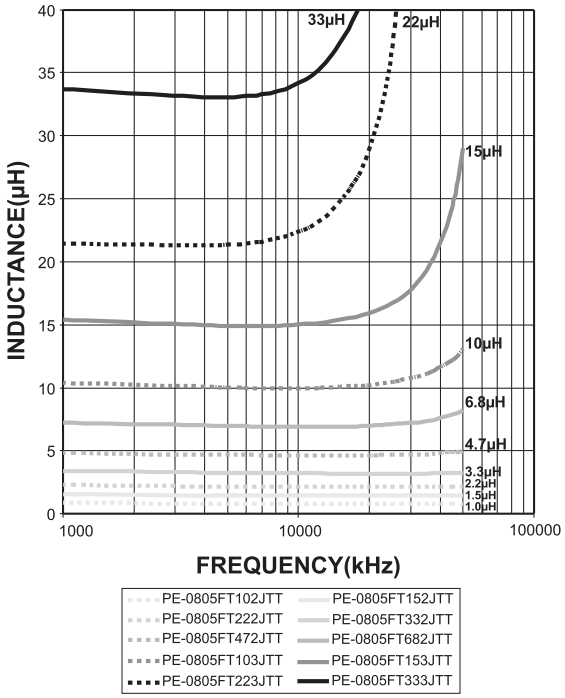

Mechanical

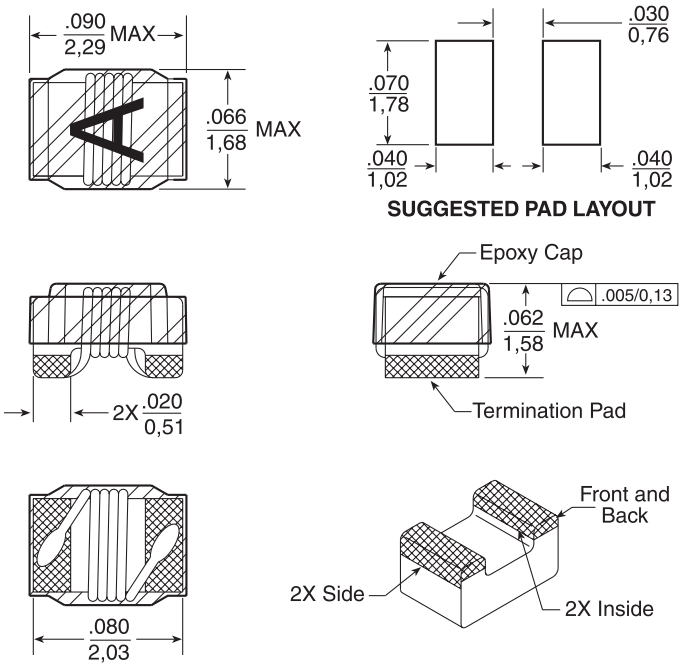

Weight 0.012grams
Tape & Reel 2000/reel

Dimensions: Inches / mm

Unless otherwise specified, all tolerances are ± .010 / 0,25

WIRE-WOUND RF CHIP INDUCTORS - 1008CD SERIES

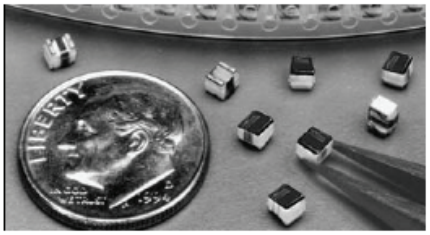

- *Wirewound ceramic core construction*
- *High Q values and high self-esonant frequency*
- *Industry standard 1008 (2520) surface mount land pattern*

See page 3 for Competition Cross Reference

Electrical Specifications @ 25°C							
Part Number	Inductance[1] (nH)	Standard Tolerance	Optional Tolerance	Q[2] (MIN)	SRF[3] (MHz MIN)	RDC[4] (Ω MAX)	IDC[5] (mA MAX)
PE-1008CD090JTT	9,7 @ 50MHz	±5%	±10% (K), ±2% (G)	50 @ 500MHz	4100.0	0.09	1000
PE-1008CD100JTT	10 @ 50MHz	±5%	±10% (K), ±2% (G)	50 @ 500MHz	4100.0	0.09	1000
PE-1008CD120JTT	12 @ 50MHz	±5%	±10% (K), ±2% (G)	50 @ 500MHz	3300.0	0.09	1000
PE-1008CD140JTT	14,3 @ 50MHz	±5%	±10% (K), ±2% (G)	50 @ 500MHz	1850.0	0.10	1000
PE-1008CD150JTT	15 @ 50MHz	±5%	±10% (K), ±2% (G)	50 @ 500MHz	1850.0	0.10	1000
PE-1008CD180JTT	17, 8 @ 50MHz	±5%	±10% (K), ±2% (G)	50 @ 350MHz	2500.0	0.11	1000
PE-1008CD220JTT	22 @ 50MHz	±5%	±10% (K), ±2% (G)	55 @ 350MHz	1800.0	0.12	1000
PE-1008CD270JTT	27 @ 50MHz	±5%	±10% (K), ±2% (G)	55 @ 350MHz	1500.0	0.11	1000
PE-1008CD330JTT	33 @ 50MHz	±5%	±10% (K), ±2% (G)	60 @ 350MHz	1600.0	0.14	1000
PE-1008CD390JTT	39 @ 50MHz	±5%	±10% (K), ±2% (G)	60 @ 350MHz	1400.0	0.12	1000
PE-1008CD470JTT	47 @ 50MHz	±5%	±10% (K), ±2% (G)	65 @ 350MHz	1200.0	0.08	1000
PE-1008CD680JTT	68 @ 50MHz	±5%	±10% (K), ±2% (G)	65 @ 350MHz	1100.0	0.07	1000
PE-1008CD820JTT	82 @ 50MHz	±5%	±10% (K), ±2% (G)	60 @ 350MHz	950.0	0.14	1000
PE-1008CD101JTT	100 @ 25MHz	±5%	±10% (K), ±2% (G)	60 @ 350MHz	900.0	0.15	650
PE-1008CD121JTT	120 @ 25MHz	±5%	±10% (K), ±2% (G)	60 @ 350MHz	950.0	0.63	650
PE-1008CD151JTT	150 @ 25MHz	±5%	±10% (K), ±2% (G)	45 @ 100MHz	625.0	0.16	580
PE-1008CD181JTT	180 @ 25MHz	±5%	±5% (J), ±2% (G)	45 @ 100MHz	650.0	0.77	620
PE-1008CD221JTT	220 @ 25MHz	±5%	±5% (J), ±2% (G)	45 @ 100MHz	625.0	0.84	500
PE-1008CD271JTT	270 @ 25MHz	±5%	±5% (J), ±2% (G)	45 @ 350MHz	525.0	0.91	500
PE-1008CD331JTT	330 @ 25MHz	±5%	±2% (G)	45 @ 100MHz	500.0	1.05	450
PE-1008CD391JTT	390 @ 25MHz	±5%	±10% (K), ±2% (G)	45 @ 100MHz	475.0	1.12	470
PE-1008CD471JTT	470@ 25MHz	±5%	±10% (K), ±2% (G)	45 @ 100MHz	450.0	1.19	420
PE-1008CD561JTT	560 @ 25MHz	±5%	±10% (K), ±2% (G)	45 @ 100MHz	415.0	1.33	310
PE-1008CD621JTT	620 @ 25MHz	±5%	±10% (K), ±2% (G)	45 @ 100MHz	375.0	1.40	300
PE-1008CD681JTT	680 @ 25MHz	±5%	±10% (K), ±2% (G)	45 @ 100MHz	375.0	1.47	230
PE-1008CD751JTT	750 @ 25MHz	±5%	±10% (K), ±2% (G)	45 @ 100MHz	350.0	1.61	200

(Continued on next page)

Pulse A YAGEO Company

WIRE-WOUND RF CHIP INDUCTORS - 1008CD SERIES

Electrical Specifications @ 25°C							
Part Number	**Inductance**[1] (nH)	**Standard Tolerance**	**Optional Tolerance**	**Q**[2] (MIN)	**SRF**[3] (MHz MIN)	**RDC**[4] (Ω MAX)	**IDC**[5] (mA MAX)
PE-1008CD821JTT	820 @ 25MHz	±5%	±10% (K), ±2% (G)	45 @ 100MHz	325.0	1.61	180
PE-1008CD911JTT	909,5 @ 25MHz	±5%	±10% (K), ±2% (G)	35 @ 50MHz	290.0	1.75	150
PE-1008CD102JTT	1000 @ 25MHz	±5%	±10% (K), ±2% (G)	35 @ 50MHz	260.0	1.90	120
PE-1008CD122JTT	1200 @ 7.9MHz	±5%	±10% (K), ±2% (G)	35 @ 50MHz	250.0	2.00	310
PE-1008CD152JTT	1500 @ 7.9MHz	±5%	±10% (K), ±2% (G)	28 @ 50MHz	200.0	2.30	330
PE-1008CD182JTT	1792.9 @ 7.9MHz	±5%	±10% (K), ±2% (G)	28 @ 50MHz	160.0	2.60	300
PE-1008CD212JTT	2154.5 @ 7.9MHz	±5%	±10% (K), ±2% (G)	28 @ 50MHz	80.0	2.80	280
PE-1008CD222JTT	2200 @ 7.9MHz	±5%	±10% (K), ±2% (G)	28 @ 50MHz	80.0	2.80	280
PE-1008CD272JTT	2700 @ 7.9MHz	±5%	±10% (K), ±2% (G)	22 @ 50MHz	90.0	3.20	290
PE-1008CD322JTT	3207.6 @ 7.9MHz	±10%		22 @ 25MHz	40.0	3.40	290
PE-1008CD332JTT	3300 @ 7.9MHz	±5%	±10% (K), ±2% (G)	22 @ 25MHz	40.0	3.40	290
PE-1008CD392JTT	3900 @ 7.9MHz	±5%	±10% (K), ±2% (G)	20 @ 25MHz	35.0	3.60	260
PE-1008CD452JTT	4526.2 @ 7.9MHz	±5%	±10% (K), ±2% (G)	20 @ 25MHz	25.0	4.00	260
PE-1008CD472JTT	4700 @ 7.9MHz	±5%	±10% (K)	20 @ 25MHz	25.0	4.00	260
PE-1008CD562JTT	5600 @ 7.9MHz	±5%	±10% (K)	20 @ 25MHz	60.0	5.40	240
PE-1008CD682JTT	6800 @ 7.9MHz	±5%		18 @ 7.9MHz	40.0	4.90	200
PE-1008CD822JTT	8200 @ 7.9MHz	±5%		18 @ 7.9MHz	25.0	6.00	160

***** For other inductance values in 1008 size, please refer to 1008CM (page 21-22) and 1008CQ (page 23) *****

Notes:

1. Inductance measured using a HP4286A RF Impedance Analyzer. (Please note that inductance information is not stamped on part, because of the extremely small size).
2. Q measured using a HP4291A RF Impedance Analyzer with a HP16193A Test Fixture.
3. SRF measured using a HP8753C Network Analyzer.
4. RDC measured using a Valhalla Scientific model 4100 ATC Digital Ohmeter.
5. Based on a 15˚C maximum temperature rise.
6. Component Weight: 0.032 grams typical.
7. These components are 0.055" in height.

(Continued on next page)

WIRE-WOUND RF CHIP INDUCTORS - 1008CD SERIES

Typical Q vs Frequency

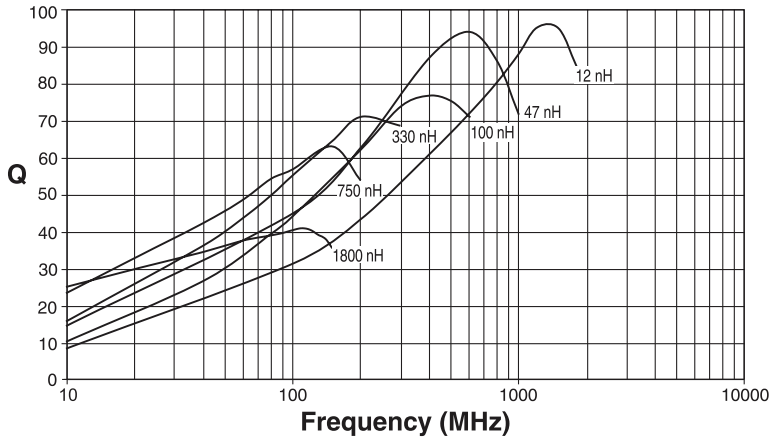

Typical Inductance vs Frequency

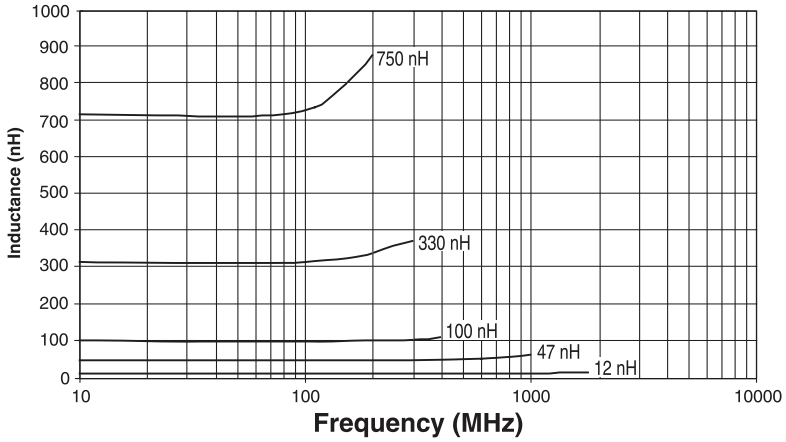

Mechanical

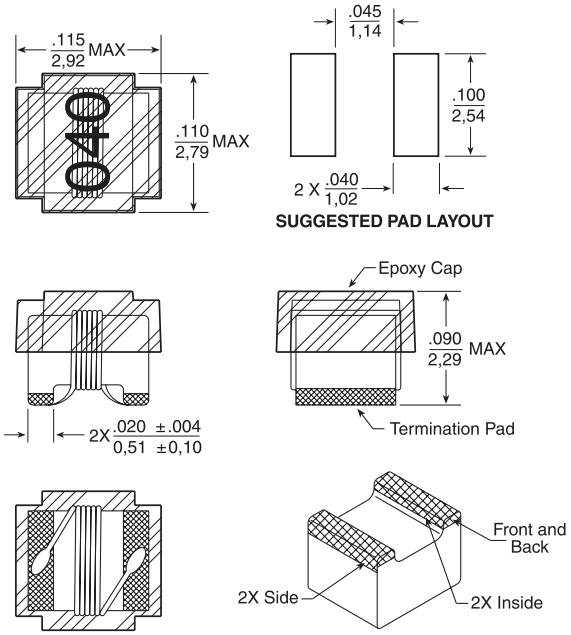

Dimensions: Inches / mm

Unless otherwise specified, all tolerances are ± .010 / 0,25

Pulse A YAGEO Company

WIRE-WOUND RF CHIP INDUCTORS - 1008CM SERIES

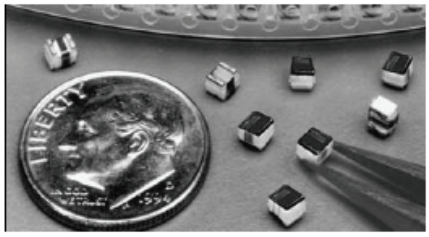

- *Wirewound ceramic core construction*
- *High Q values and high self-esonant frequency*
- *Industry standard 1008 (2520) surface mount land pattern*

See page 3 for Competition Cross Reference

Electrical Specifications @ 25°C								
Part Number	**Inductance**[1] (nH)	**Standard Tolerance**	**Optional Tolerance**	**Q**[2] (MIN)	**SRF**[3] (MHz MIN)	**RDC**[4] (Ω MAX)	**IDC**[5] (mA MAX)	**Ind**
PE-1008CM040KTT	4.7 @ 50MHz	±10%		60 @ 1500MHz	5500.0	0.09	1000	4.7
PE-1008CM080JTT	8.2 @ 50MHz	±5%	±10% (K)	60 @ 1500MHz	5500.0	0.09	1000	8.2
PE-1008CM100JTT	10 @ 50MHz	±5%	±10% (K), ±2% (G)	50 @ 500MHz	4100	0.09	1000	10.0
PE-1008CM120JTT	12 @ 50MHz	±5%	±10% (K), ±2% (G)	65 @ 500MHz	4100	0.09	1000	12.0
PE-1008CM150JTT	15 @ 50MHz	±5%	±10% (K)	55 @ 500MHz	3300	0.09	1000	15.0
PE-1008CM180JTT	18 @ 50MHz	±2%	±10% (K)	55 @ 500MHz	1850	0.10	1000	18.0
PE-1008CM220JTT	22 @ 50MHz	±2%	±10% (K)	55 @ 500MHz	1850	0.10	1000	22.0
PE-1008CM270JTT	27 @ 50MHz	±5%	±10% (K), ±2% (G)	60 @ 350MHz	2500	0.11	1000	27.0
PE-1008CM330JTT	33 @ 50MHz	±5%	±10% (K), ±2% (G)	60 @ 350MHz	1800	0.18	800	33.0
PE-1008CM390JTT	39 @ 50MHz	±5%	±10% (K), ±2% (G)	70 @ 350MHz	1400	0.12	1000	39.0
PE-1008CM470JTT	47 @ 50MHz	±5%	±10% (K), ±2% (G)	70 @ 350MHz	1200	0.08	1000	47.0
PE-1008CM560JTT	56 @ 50MHz	±5%	±10% (K), ±2% (G)	60 @ 350MHz	1150	0.12	1000	56.0
PE-1008CM680JTT	68 @ 50MHz	±5%	±10% (K), ±2% (G)	70 @ 350MHz	1100	0.07	1000	68.0
PE-1008CM820JTT	82 @ 50MHz	±5%	±10% (K), ±2% (G)	65 @ 350MHz	950	0.14	950	82.0
PE-1008CM101JTT	100 @ 25MHz	±5%	±10% (K), ±2% (G)	65 @ 350MHz	900	0.15	650	100.0
PE-1008CM121JTT	120 @ 25MHz	±5%	±10% (K), ±2% (G)	60 @ 350MHz	825	0.22	650	120.0
PE-1008CM151JTT	150 @ 25MHz	±5%	±10% (K), ±2% (G)	50 @ 100MHz	625	0.16	580	150.0
PE-1008CM181JTT	180 @ 25MHz	±5%	±2% (G)	50 @ 100MHz	650	0.25	600	180.0
PE-1008CM201JTT	200 @ 25MHz	±5%	±10% (K), ±2% (G)	50 @ 100MHz	630	0.24	580	200.0
PE-1008CM221JTT	220 @ 25MHz	±5%	±10% (K), ±2% (G)	50 @ 100MHz	625	0.28	500	220.0
PE-1008CM271JTT	270 @ 25MHz	±5%	±10% (K), ±2% (G)	45 @ 100MHz	525	0.50	500	270.0
PE-1008CM331JTT	330 @ 25MHz	±5%	±2% (G)	50 @ 100MHz	500	0.80	450	330.0
PE-1008CM371JTT	370 @ 25MHz	±5%	±10% (K), ±2% (G)	50 @ 100MHz	490	0.80	430	370.0
PE-1008CM391JTT	390 @ 25MHz	±5%	±10% (K), ±2% (G)	50 @ 100MHz	475	0.75	425	390.0
PE-1008CM401GTT	400 @ 25MHz	±2%		50 @ 100MHz	470	0.75	420	400.0
PE-1008CM471JTT	470 @ 25MHz	±5%	±10% (K), ±2% (G)	50 @ 100MHz	450	0.70	350	470.0
PE-1008CM561JTT	560 @ 25MHz	±5%	±10% (K), ±2% (G)	50 @ 100MHz	425	0.80	350	560.0

(Continued on next page)

WIRE-WOUND RF CHIP INDUCTORS - 1008CM SERIES

Electrical Specifications @ 25°C								
Part Number	Inductance[1] (nH)	Standard Tolerance	Optional Tolerance	Q[2] (MIN)	SRF[3] (MHz MIN)	RDC[4] (Ω MAX)	IDC[5] (mA MAX)	INC
PE-1008CM621JTT	620 @ 25MHz	±5%	±10% (K)	45 @ 100MHz	375.0	1.90	200	620.0
PE-1008CM681JTT	680 @ 25MHz	±5%	±2% (G)	45 @ 100MHz	375.0	2.30	200	680.0
PE-1008CM751JTT	750 @ 25MHz	±5%	±10% (K), ±2% (G)	45 @ 100MHz	350.0	1.60	200	750.0
PE-1008CM821JTT	820 @ 25MHz	±5%	±10% (K), ±2% (G)	40 @ 100MHz	325.0	3.30	200	820.0
PE-1008CM911JTT	910 @ 25MHz	±5%	±10% (K), ±2% (G)	40 @ 50MHz	300.0	2.10	200	910.0
PE-1008CM102JTT	1000 @ 25MHz	±5%	±10% (K), ±2% (G)	40 @ 50MHz	300.0	1.80	200	1000.0
PE-1008CM122JTT	1200 @ 10MHz	±5%	±10% (K), ±2% (G)	40 @ 50MHz	250.0	3.00	200	1200.0
PE-1008CM152JTT	1500 @ 10MHz	±5%	±10% (K), ±2% (G)	40 @ 50MHz	200.0	4.00	150	1500.0
PE-1008CM182JTT	1800 @ 10MHz	±5%	±10% (K), ±2% (G)	40 @ 50MHz	150.0	5.09	150	1800.0
PE-1008CM222JTT	2200 @ 10MHz	±5%	±10% (K), ±2% (G)	30 @ 25MHz	80.0	5.85	150	2200.0
PE-1008CM272JTT	2700 @ 10MHz	±10%		30 @ 25MHz	90.0	7.70	150	2700.0
PE-1008CM332GTT	3300 @ 10MHz	±2%	±10% (K)	25 @ 15MHz	40.0	7.80	150	3300.0
PE-1008CM472JTT	4700 @ 10MHz	±5%	±5% (J), ±2% (G)	16 @ 15MHz	25.0	6.00	150	4700.0

Notes:

1. Inductance measured using a HP4286A RF Impedance Analyzer. (Please note that inductance information is not stamped on part, because of the extremely small size).
2. Q measured using a HP4291A RF Impedance Analyzer with a HP16193A Test Fixture.
3. SRF measured using a HP8753C Network Analyzer.
4. RDC measured using a Valhalla Scientific model 4100 ATC Digital Ohmeter.
5. Based on a 15˚C maximum temperature rise.
6. Component Weight: 0.032 grams typical.

Typical Q vs Frequency

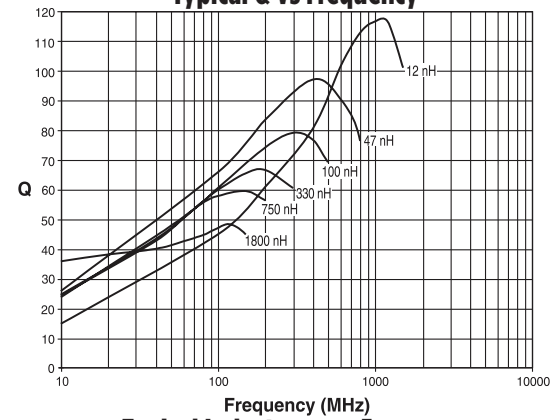

Typical Inductance vs Frequency

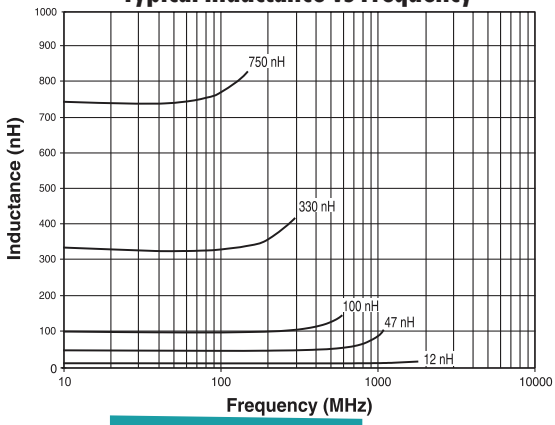

Mechanical

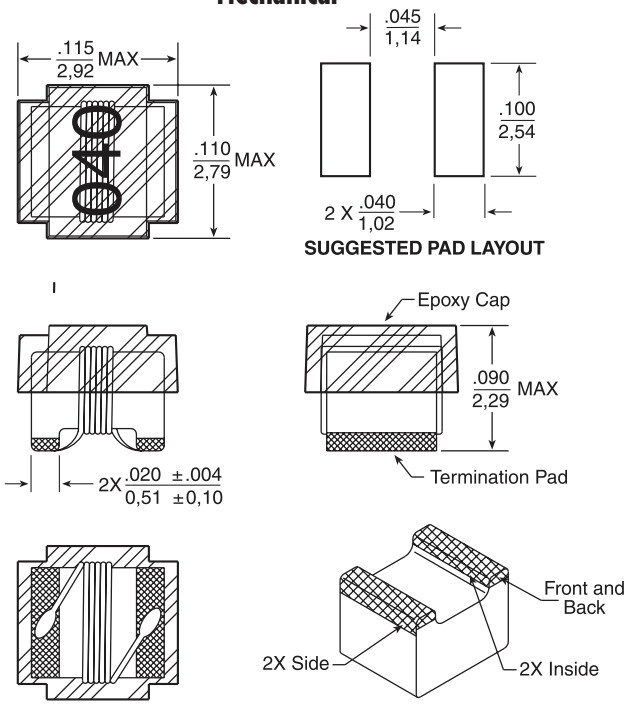

Dimensions: Inches / mm

Unless otherwise specified, all tolerances are ± .010 / 0,25

Pulse A YAGEO Company

WIRE-WOUND RF CHIP INDUCTORS - 1008CQ SERIES

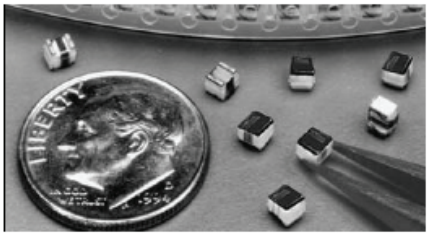

- *Wirewound ceramic core construction*
- *High Q values and Idc values*
- *High self-esonant frequency*
- *Industry standard 1008 (2520) surface mount land pattern*

See page 3 for Competition Cross Reference

Electrical Specifications @ 25°C								
Part Number	**Inductance**[1] (nH)	**Standard Tolerance**	**Optional Tolerance**	**Q**[2] (MIN)	**SRF Min**[3] (MHz MIN)	**RDC**[4] (Ω MAX)	**IDC**[5] (mA MAX)	**Ind**
PE-1008CQ4N1JTT	4.1 @ 50MHz	±5%	±10% (K)	75 @ 1500MHz	6000.0			4.1
PE-1008CQ100JTT	10 @ 50MHz	±5%	±10% (K)	60 @ 500MHz	3600.0			10.0
PE-1008CQ180JTT	18 @ 50MHz	±5%	±10% (K)	62 @ 350MHz	2700.0			18.0
PE-1008CQ390JTT	39 @ 50MHz	±5%		75 @ 350MHz	1300.0			39.0
PE-1008CQ470KTT	47 @ 50MHz	±10%		75 @ 350MHz	1450.0			47.0
PE-1008CQ820JTT	82 @ 50MHz	±5%	±10% (K)	80 @ 350MHz	1060.0			82.0
PE-1008CQ101JTT	100 @ 50MHz	±5%	±10% (K)	62 @ 350MHz	820.0			100.0
PE-1008CQ151KTT	150 @ 50MHz	±10%		60 @ 350MHz	750.0			150.0
PE-1008CQ181JTT	180 @ 50MHz	±5%	±10% (K)	55 @ 350MHz	800.0			180.0
PE-1008CQ221JTT	220 @ 50MHz	±5%	±10% (K)	56 @ 350MHz	680.0			220.0
PE-1008CQ271JTT	270 @ 50MHz	±5%	±10% (K)	45 @ 350MHz	600.0			270.0
PE-1008CQ331JTT	330 @ 50MHz	±5%	±10% (K)	52 @ 100MHz	550.0			330.0
PE-1008CQ391JTT	390 @ 50MHz	±5%	±10% (K)	35 @ 350MHz	500.0			390.0

Notes:

1. Inductance measured using a HP4286A RF Impedance Analyzer. (Please note that inductance information is not stamped on part, because of the extremely small size).
2. Q measured using a HP4291A RF Impedance Analyzer with a HP16193A Test Fixture.
3. SRF measured using a HP8753C Network Analyzer.
4. RDC measured using a Valhalla Scientific model 4100 ATC Digital Ohmeter.
5. Based on a 15˚C maximum temperature rise.
6. Component Weight: 0.032 grams typical.

WIRE-WOUND RF CHIP INDUCTORS - 1008CQ SERIES

Typical Q vs Frequency

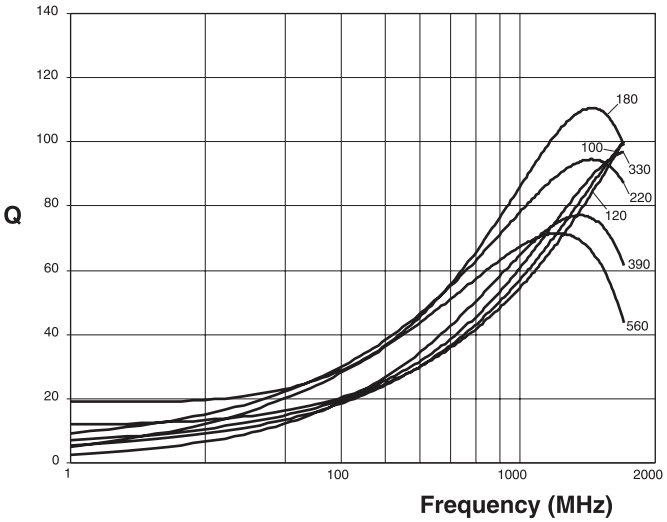

Typical Inductance vs Frequency

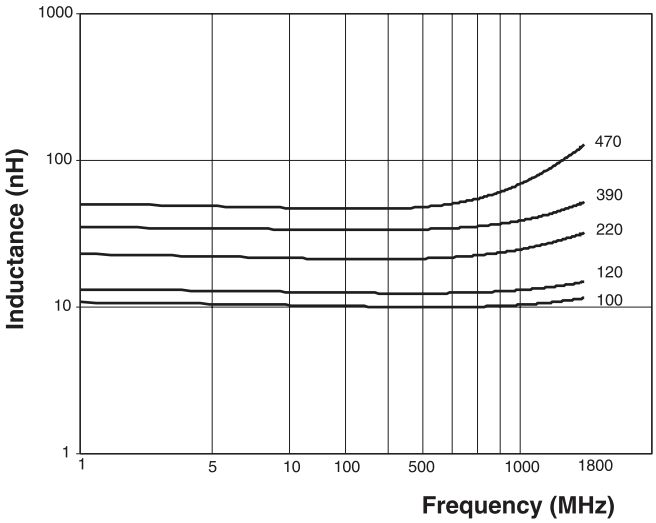

Mechanical

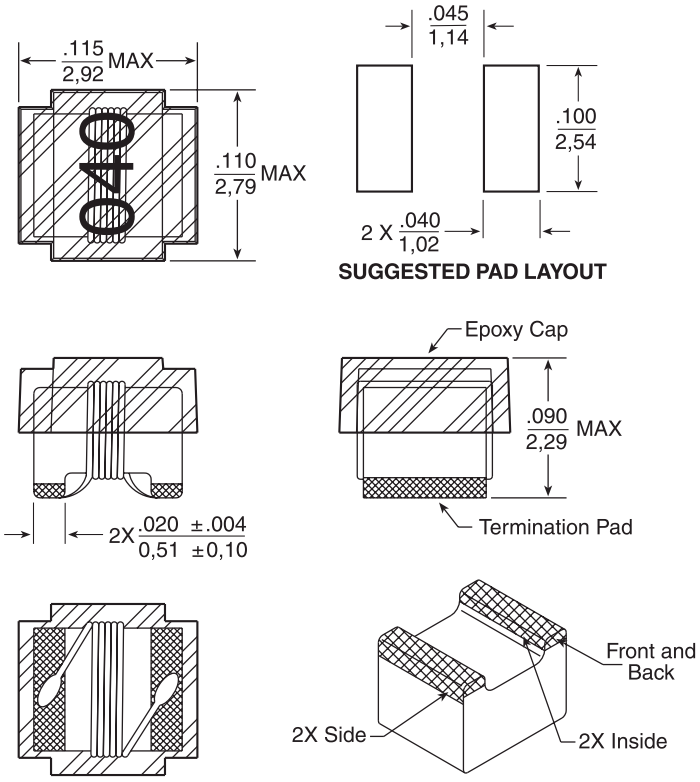

Dimensions: Inches / mm

Unless otherwise specified, all tolerances are ± .010 / 0,25

Pulse A YAGEO Company

WIRE-WOUND RF CHIP INDUCTORS - 1206CD SERIES

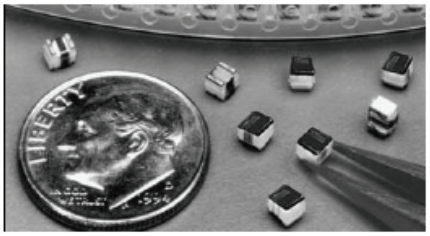

- *Wirewound ceramic core construction*
- *High Q values and self-esonant frequency*
- *Industry standard 1206 (3216) SMT land pattern*

See page 3 for Competition Cross Reference

Electrical Specifications @ 25°C							
Part Number	Inductance[1] (nH)	Standard Tolerance	Optional Tolerance	Q[2] (MIN)	SRF Min[3] (MHz MIN)	RDC[4] (Ω MAX)	IDC[5] (mA MAX)
PE-1206CD030KTT	3.3 @ 100MHz	±10% (K)	±5% (J)	30 @ 300MHz	6200	0.05	1000
PE-1206CD060KTT	6.8 @ 100MHz	±10% (K)	±5% (J)	30 @ 300MHz	5500	0.07	1000
PE-1206CD100KTT	10 @ 100MHz	±10% (K)	±5% (J)	40 @ 300MHz	4000	0.08	1000
PE-1206CD120KTT	12 @ 100MHz	±10% (K)	±5% (J)	40 @ 300MHz	3200	0.08	1000
PE-1206CD150KTT	15 @ 100MHz	±10% (K)	±5% (J)	40 @ 300MHz	3200	0.10	1000
PE-1206CD180KTT	18 @ 100MHz	±10% (K)	±5% (J)	50 @ 300MHz	2800	0.10	1000
PE-1206CD220KTT	22 @ 100MHz	±10% (K)	±5% (J)	50 @ 300MHz	2200	0.10	1000
PE-1206CD270KTT	27 @ 100MHz	±10% (K)	±5% (J)	50 @ 300MHz	1800	0.11	1000
PE-1206CD330KTT	33 @ 100MHz	±10% (K)	±5% (J)	55 @ 300MHz	1800	0.11	1000
PE-1206CD390KTT	39 @ 100MHz	±5% (J)		55 @ 300MHz	1800	0.12	1000
PE-1206CD470KTT	47 @ 100MHz	±10% (K)	±5% (J)	55 @ 300MHz	1500	0.13	1000
PE-1206CD820KTT	82 @ 100MHz	±10% (K)	±5% (J)	55 @ 300MHz	1200	0.21	900
PE-1206CD101KTT	100 @ 100MHz	±10% (K)	±5% (J)	55 @ 300MHz	1100	0.26	850
PE-1206CD121KTT	120 @ 100MHz	±10% (K)	±5% (J)	60 @ 350MHz	1100	0.26	800
PE-1206CD151KTT	150 @ 100MHz	±10% (K)	±5% (J)	60 @ 350MHz	950	0.31	750
PE-1206CD181KTT	180 @ 50MHz	±10% (K)	±5% (J)	60 @ 100MHz	900	0.43	700
PE-1206CD221KTT	220 @ 50MHz	±10% (K)	±5% (J)	60 @ 350MHz	760	0.50	670
PE-1206CD271KTT	270 @ 50MHz	±10% (K)	±5% (J)	55 @ 300MHz	730	0.56	630
PE-1206CD331KTT	330 @ 50MHz	±10% (K)		45 @ 150MHz	650	0.62	590
PE-1206CD391KTT	390 @ 50MHz	±10% (K)	±5% (J)	45 @ 150MHz	600	0.75	530
PE-1206CD471KTT	470 @ 50MHz	±10% (K)	±5% (J)	45 @ 150MHz	550	1.30	490
PE-1206CD561KTT	560 @ 35MHz	±10% (K)	±5% (J)	45 @ 150MHz	470	1.34	460
PE-1206CD621KTT	629 @ 35MHz	±10% (K)	±5% (J), ±2% (G)	45 @ 150MHz	470		
PE-1206CD681KTT	680 @ 35MHz	±5% (J)		45 @ 150MHz	450	1.58	430
PE-1206CD821KTT	820 @ 35MHz	±5% (J)		45 @ 150MHz	420	1.82	400
PE-1206CD911KTT	910 @ 35MHz	±5% (J)		45 @ 150MHz	410	2.95	400
PE-1206CD102KTT	1000 @ 35MHz	±5% (J)		45 @ 150MHz	400	2.80	320
PE-1206CD122KTT	1200 @ 35MHz	±5% (J)		45 @ 150MHz	380	3.20	300

(Continued on next page)

WIRE-WOUND RF CHIP INDUCTORS - 1206CD SERIES

Notes:

1. Inductance measured using a HP4286A RF Impedance Analyzer. (Please note that inductance information is not stamped on part, because of the extremely small size).
2. Q measured using a HP4291A RF Impedance Analyzer with a HP16193A Test Fixture.
3. SRF measured using a HP8753C Network Analyzer.
4. RDC measured using a Valhalla Scientific model 4100 ATC Digital Ohmeter.
5. Based on a 15˚C maximum temperature rise.
6. Component Weight: 0.035 grams typical.
7. These components are 0.060" in height.

Typical Q vs Frequency

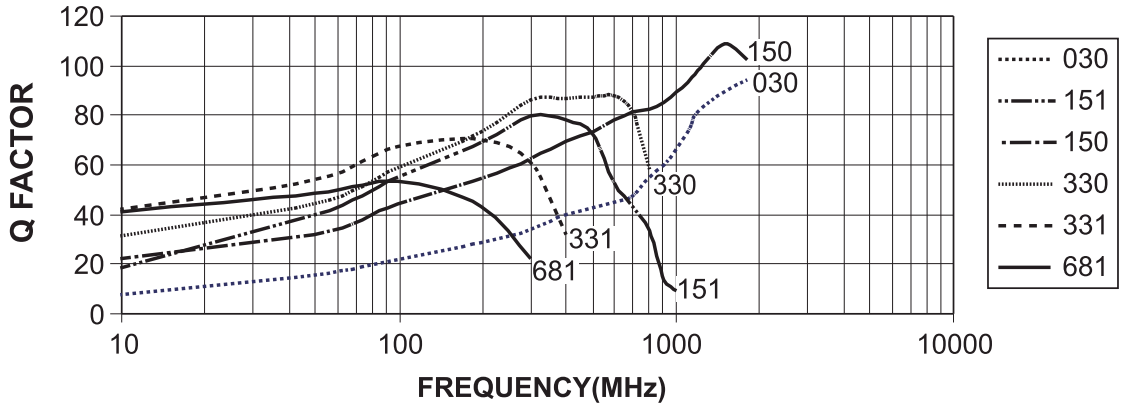

Typical Inductance vs Frequency

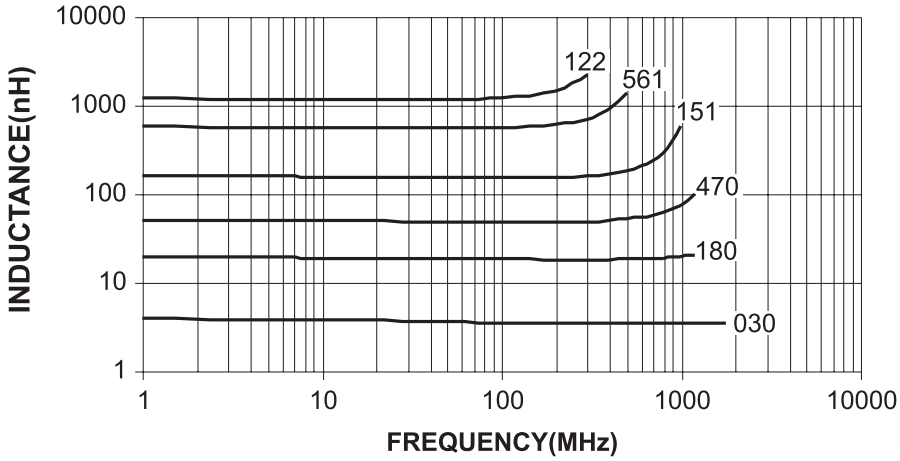

Pulse A YAGEO Company

Mechanical

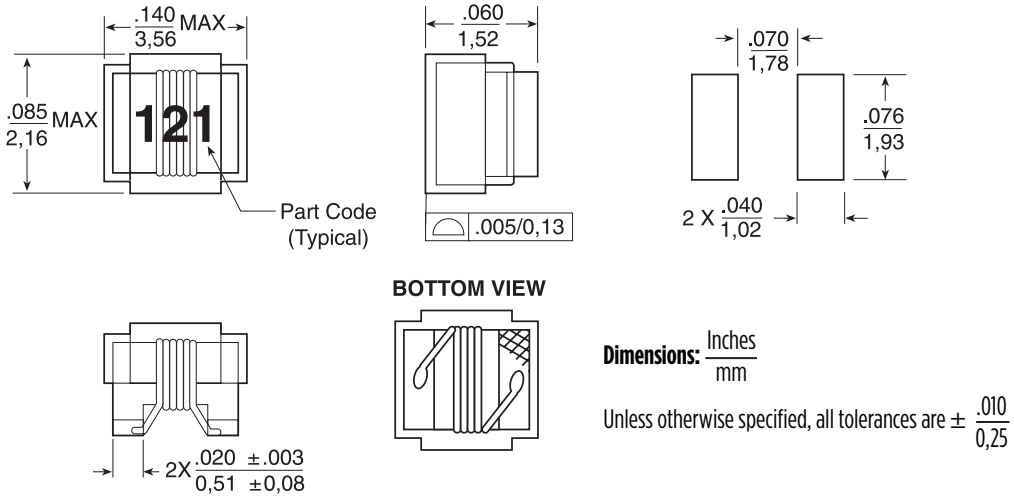

Dimensions: Inches / mm

Unless otherwise specified, all tolerances are ± .010 / 0,25

Performance warranty of products offered on this data sheet is limited to the parameters specified. Data is subject to change without notice. Other brand and product names mentioned herein may be trademarks or registered trademarks of their respective owners. © Copyright, 2019. Pulse Electronics, Inc. All rights reserved.