RN4678

Bluetooth® Dual Mode Module

Features

- Bluetooth® Classic (BR/EDR) and Low Energy (LE)
- Certified to FCC, ISED, MIC, KCC, NCC and SRRC Radio Regulations
- European Radio Equipment Directive (RED) Assessed Radio Module
- Qualified for Bluetooth SIG v5.0 Core Specification
- Transparent UART mode for Seamless Serial Data over Bluetooth Classic using Serial Port Profile (SPP) and Bluetooth Low Energy (BLE) using Generic Attribute (GATT) Profile
- Easily Programmable through ASCII Commands and Easily Configurable with Available PIC® MCU Driver Library
- Firmware can be Upgraded in the Field over UART (Flash version)
- Integral Chip Antenna (RN4678)
- Integrated Crystal, Internal Voltage Regulator and Matching Circuitry
- Available Configurable I/O Pins for Control or Status Indication
- Supports Apple® iPod® Accessory Protocol (iAP2) (*only* RN4678APL)
- Supports Bluetooth LE Secure Connections
- Bluetooth LE Data Packet Length Extension
- Small and Compact Surface Mount Module
- Castellated SMT Pads for Easy and Reliable PCB Mounting
- Ideal for Portable Battery-Operated Devices

RF/Analog

- Frequency: 2.402 GHz to 2.480 GHz
- RX Sensitivity: -90 dBm (BR/EDR), -92 dBm (LE)
- Class 2 Output Power (+1.5 dBm typical)

Data Throughput

Data Throughput at 1 Mbps UART Baud Rate:

- BR/EDR: up to 32 Kbytes/s
- LE: up to 7 Kbytes/s

Data Throughput at 115200 bps UART Baud Rate

- BR/EDR: up to 10 Kbytes/s
- LE: up to 6 Kbytes/s

Operating Conditions

- Operating Voltage Range: 3.3V to 4.2V
- Operating Temperature Range: -20°C to +70°C



MAC/Baseband/Higher Layer Features

- Secure AES128 Encryption
- Bluetooth Classic: GAP, SPP, SDP, RFCOMM and L2CAP
- Bluetooth Low Energy: GAP, GATT, ATT, SMP and L2CAP

Applications

- Internet of Things (IoT)
- Secure Payment
- Home and Security
- Health and Fitness
- Industrial and Data Logger
- LED Lighting (16 configurations)

Description

The RN4678 module is a fully certified, Bluetooth v5.0 compliant (BR/EDR/LE) Dual mode module, available for customers to easily add Dual mode Bluetooth wireless capability to their products. The RN4678 is built around Microchip's IS1678 Bluetooth Dual mode chip. Refer to **Section 8.0 "Ordering Information"**.

The RN4678 provides a convenient method for cable replacement for smartphones or tablets for data transfer and control based on the Bluetooth protocols. Data transfer is achieved through the Bluetooth link by sending or receiving data through SPP in Bluetooth (BT) Classic mode and through Transparent UART in the BLE mode. The ASCII interface provides an easy way to learn the operation and to integrate the module with any microprocessor or microcontroller (MCU) with a UART interface.

© 2016-2021 Microchip Technology Inc.

Table of Contents

1.0 Device Overview 3
2.0 Application Information 7
3.0 Electrical Characteristics 15
4.0 Radio Characteristics 19
5.0 Physical Dimensions 20
6.0 Reflow Profile 23
7.0 Module Placement 24
8.0 Ordering Information 27
9.0 Regulatory Approval 28
Appendix A: Revision History 33
The Microchip Website 34
Customer Change Notification Service 34
Customer Support 34
Product Identification System 35

TO OUR VALUED CUSTOMERS

It is our intention to provide our valued customers with the best documentation possible to ensure successful use of your Microchip products. To this end, we will continue to improve our publications to better suit your needs. Our publications will be refined and enhanced as new volumes and updates are introduced.

If you have any questions or comments regarding this publication, please contact the Marketing Communications Department via E-mail at **docerrors@microchip.com**. We welcome your feedback.

Most Current Data Sheet

To obtain the most up-to-date version of this data sheet, please register at our Worldwide Website at:

http://www.microchip.com

You can determine the version of a data sheet by examining its literature number found on the bottom outside corner of any page. The last character of the literature number is the version number, (e.g., DS30000000A is version A of document DS30000000).

Errata

An errata sheet, describing minor operational differences from the data sheet and recommended workarounds, may exist for current devices. As device/documentation issues become known to us, we will publish an errata sheet. The errata will specify the revision of silicon and revision of document to which it applies.

To determine if an errata sheet exists for a particular device, please check with one of the following:

- Microchip's Worldwide Website; **http://www.microchip.com**
- Your local Microchip sales office (see last page)

When contacting a sales office, please specify which device, revision of silicon and data sheet (include literature number) you are using.

Customer Notification System

Register on our website at **www.microchip.com** to receive the most current information on all of our products.

1.0 DEVICE OVERVIEW

The RN4678 module is a fully certified, embedded Bluetooth (BR/EDR/LE) wireless module. The module includes an on-board Bluetooth stack, power management subsystem, a 2.4 GHz transceiver and RF power amplifier. Customers can embed Bluetooth functionality into any application using the RN4678 module.

The RN4678 enables rapid product development and faster time to market, and it is designed to provide integrators with the following features:

- Simple integration and programming
- Reduced development time
- Superior wireless module with low-cost system
- Interoperability with Bluetooth host
- Wide range of applications

The RN4678 is a complete and fully regulatory certified module with an integral ceramic chip antenna and RF shield.

The RN4678 is a small, compact and surface-mounted module with castellated pads for easy and reliable host PCB mounting. The module is compatible with standard pick-and-place equipment and can independently maintain a low-power wireless connection. Low-power usage and flexible power management maximize the lifetime of the RN4678 module in battery-operated devices. A wide operating temperature range enables its applications in indoor and outdoor environments.

Figure 1-1 illustrates the internal block diagram of the RN4678 module.

FIGURE 1-1: RN4678 INTERNAL BLOCK DIAGRAM

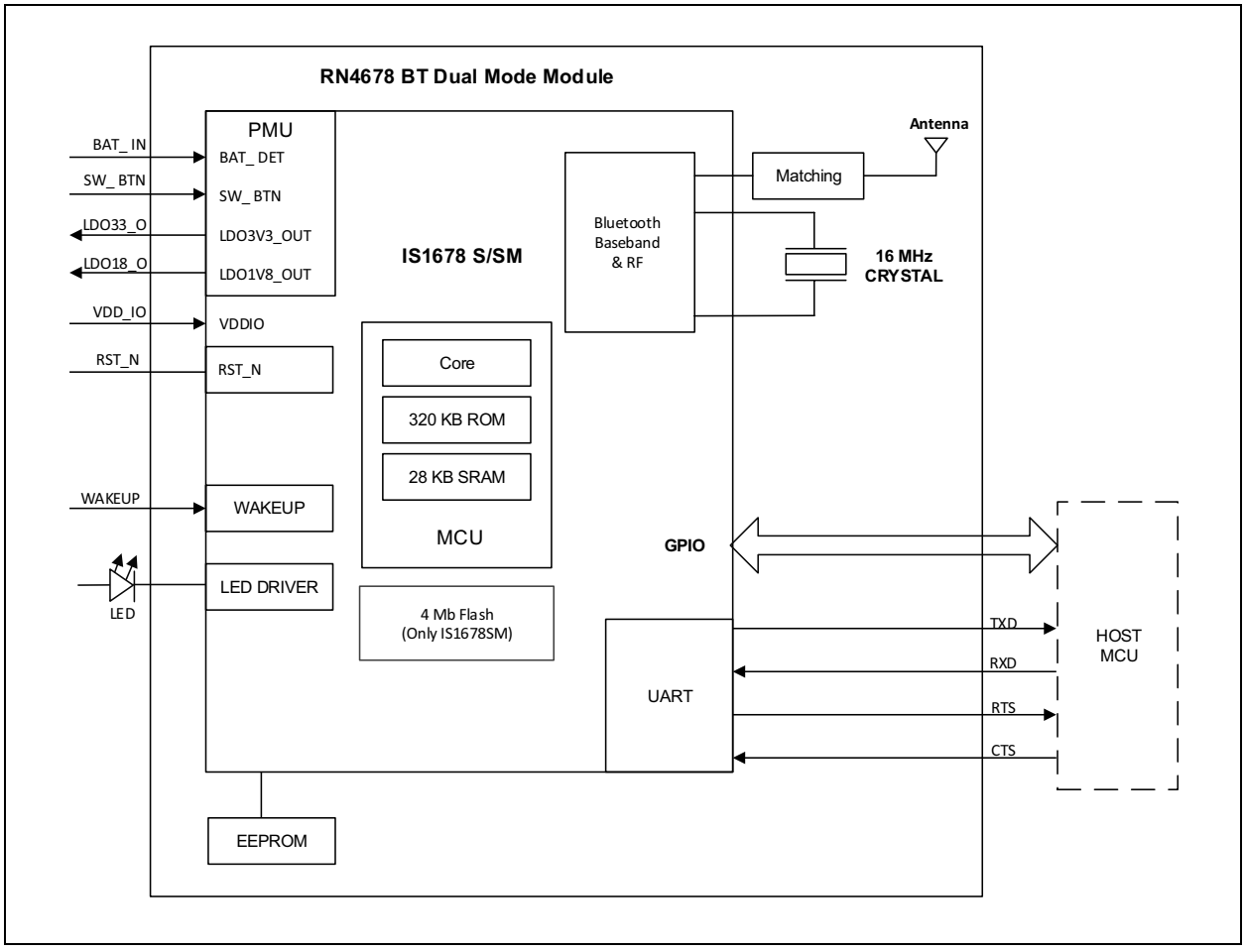

Table 1-1 provides the description of the various pins of the RN4678 module.

TABLE 1-1: PIN DESCRIPTION

RN4678	Pin Name	Type	Description
1	GND	Power	Ground reference.
2	GND	Power	Ground reference.
3	GND	Power	Ground reference.
4	BAT_IN	Power	Battery Input (3.3V to 4.2V), Main positive supply input, Connect to 10 µF (X5R/X7R) capacitor.
5	SW_BTN	DI	• Software Button: - H: Power On - L: Power Off • By default, this functionality is disabled. Refer to *"RN4678 Command Reference User Guide"* (DS50002506) to enable the feature
6	LDO33_O	Power	Internal 3.3V LDO output; can source no more than 50 mA.
7	VDD_IO	Power	I/O positive supply input. *For internal use only*; do *not* connect to other devices.
8	LDO18_O	Power	Internal 1.8V LDO output. *For internal use only*; do *not* connect to other devices.
9	WAKEUP	DI	Wake-up from Sleep mode (active-low) (internal pull-up).
10	PMULDO_O	Power	Power management unit output. *For internal use only*; do *not* connect to other devices.
11	P0_4	DO	Status indication pin. Indicates the current status of BLE data transmission. High: Data currently transmitting Low: No current data transmission
12	P1_5	DO	Status indication pin. Indicates the current connection status. High: Powered on and not connected Low: Connected to peer device
13	P1_2	DO	GPIO pin. Internally pulled up by default.
14	P1_3	DIO	GPIO pin. Internally pulled up by default.
15	P1_7/CTS	DIO	Configurable control or indication pin or UART CTS (input).
16	P0_5	DIO	Configurable control or indication pin.
17	P0_0/RTS	DIO	Configurable control or indication pin or UART RTS (output).
18	P2_0	DI	System configuration pin. Along with the P2_4 and EAN pins, used to set the module in any of the following three modes: Application mode (for normal operation), Test mode (to change EEPROM values) and Write Flash mode (to enter the new firmware into the module); refer to Table 2-1.
19	P2_4	DI	System configuration pin. Along with the P2_0 and EAN pins, used to set the module in any of the following three modes: Application mode (for normal operation), Test mode (to change EEPROM values) and Write Flash mode (to enter new firmware into the module); refer to Table 2-1.
20	EAN	DI	External address bus negative pin. System configuration pin along with the P2_0 and P2_4 pins, used to set the module in any of the following three modes: Application mode (for normal operation), Test mode (to change EEPROM values) and Write Flash mode (to enter new firmware into the module); refer to Table 2-1.
21	$\overline{\text{RST_N}}$	DI	Module Reset (internal pull-up). Apply a pulse of at least 63 ns.

© 2016-2021 Microchip Technology Inc.

TABLE 1-1: PIN DESCRIPTION (CONTINUED)

RN4678	Pin Name	Type	Description
22	RXD	DI	UART data input.
23	TXD	DO	UART data output.
24	P3_1	DIO	Configurable control or indication pin (Internally pulled up if configured as an input).
25	P3_2	DIO	Configurable control or indication pin (Internally pulled up if configured as an input).
26	P3_3	DIO	Configurable control or indication pin (Internally pulled up if configured as an input).
27	P3_4	DIO	Configurable control or indication pin (Internally pulled up if configured as an input).
28	P3_6	DIO	Do *not* connect.
29	P3_7	DIO	Configurable control or indication pin (Internally pulled up if configured as an input).
30	LED	DO	Status LED, connect to LDO33_0.
31	GND	Power	Ground reference.
—	BT_RF	AIO	External antenna connection (50 Ohms).
32	GND	Power	Ground reference.
33	GND	Power	Ground reference.

Legend: A = Analog D = Digital I = Input O = Output

Figure 1-2 illustrates the pin diagram of the RN4678 module.

FIGURE 1-2: RN4678 PIN DIAGRAM

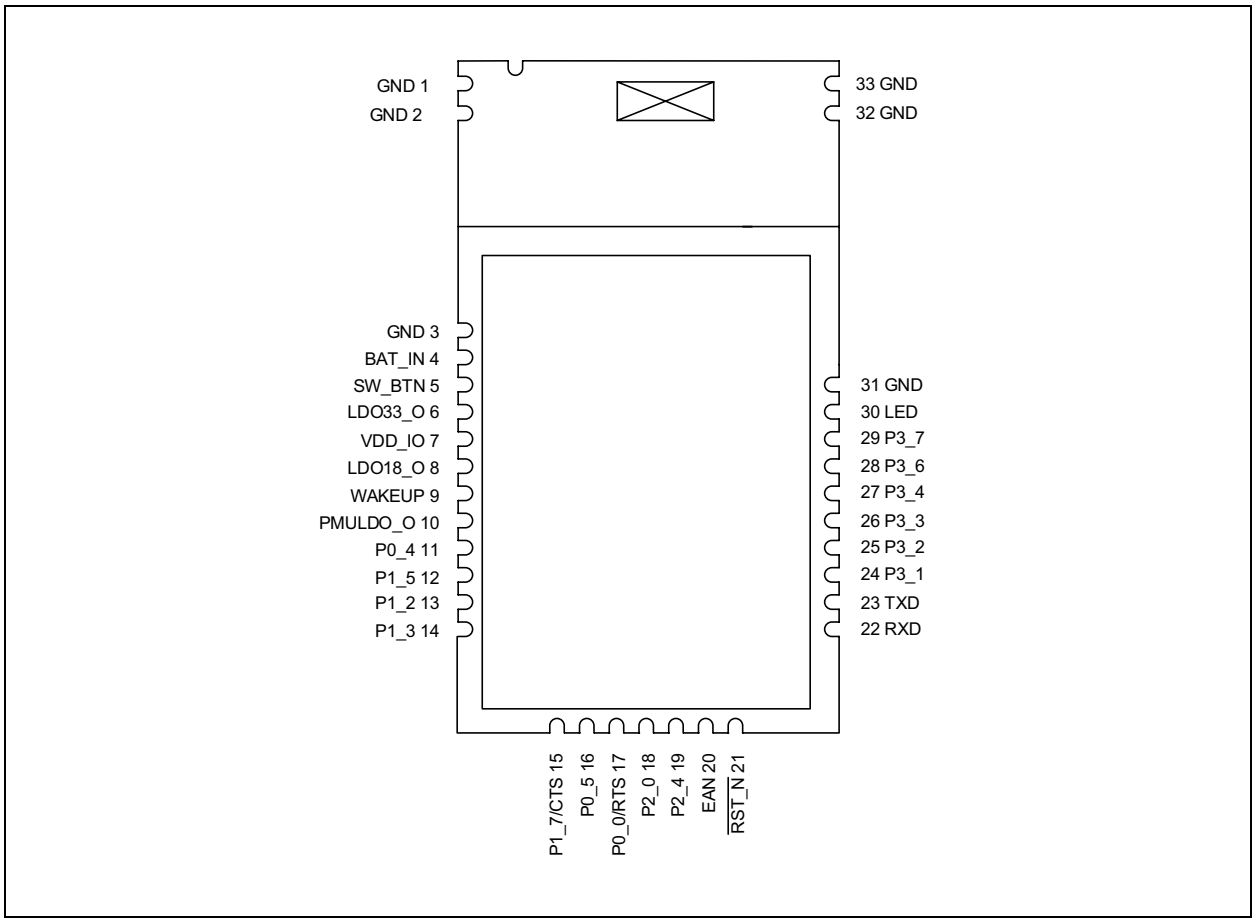

2.0 APPLICATION INFORMATION

2.1 Module Configuration

For the I/O pins, P2_0, P2_4 and EAN, place the RN4678 into Operating mode. Each of these pins has internal pull-up, and allows configuration settings and firmware to be updated from UART. Table 2-1 provides system configuration details.

2.2 Flow Control

Flow control is enabled by default on the RN4678 module. With the flow control enabled, the RTS and CTS lines need to be connected to the corresponding lines for the module to operate. To pause data flow from the RN4678, the CTS pin (RN4678 input pin) must be pulled high. The RN4678 pulls the RTS pin (output pin) low to indicate that it can accept data.

2.3 Control and Indication I/O Pins

The GPIO pins of the RN4678 module can be configured to different functions using the ASCII command interface. Table 2-1 shows the various pins in the RN4678 module that are available for configuration and their default configuration settings. Table 2-2 provides details on each of the functions available.

TABLE 2-1: SYSTEM CONFIGURATION SETTINGS

P2_0	P2_4	EAN	Operational Mode
Low	Low	High	Write FLASH
Low	High	Low	Write EEPROM and Test mode
High	High	Low	Normal Operational/Application mode

TABLE 2-2: CONTROL AND INDICATION I/O PIN ASSIGNMENTS

Pin Symbol	Default Configuration
P0_0	UART_RTS(1,2)
P0_5	N/C
P1_7	UART_CTS(1,2)
P3_1	INQUIRY CONTROL
P3_2	LINK_DROP_CONTROL (DISCONNECT)
P3_3	UART_RX_IND
P3_4	PAIRING_KEY
P3_7	LOW_BATTERY_IND

Note 1: The RTS pin can only be assigned to P0_0 and the CTS pin can only be assigned to P1_7.

2: The RTS and CTS pins can be configured as GPIOs if flow control is disabled.

© 2016-2021 Microchip Technology Inc.

TABLE 2-3: CONFIGURABLE FUNCTIONS AND DESCRIPTIONS

Function Name	Description
Low Battery Indication	Pin output goes low when the battery level is below a specified level. Default battery low indication voltage level is 3.4V.
RSSI Indication	Use this pin to indicate the quality of the link based on the RSSI level. If the RSSI level is lower than the specified values, then the RSSI indication pin goes low.
Link Drop Control	Use this pin to force the module to drop the current BLE link with a peer device. Pulling the Link Drop pin low forces a disconnect. The pin must be pulled low for at least 10 ms.
UART RX Indication	Use this pin to enable communication with the UART when the module is in Low-Power mode. When *not* in Low-Power mode, the module runs on a 16 MHz clock. If Low-Power mode is enabled on the module by using command, `SO,1`, the module runs on a 32 kHz clock, thus reducing power consumption. However, in Low-Power mode, the host MCU *cannot* communicate with the module via the UART since the UART is *not* operational. If the user intends to provide data or commands via UART in the Low-Power mode, then the UART_RX_IND pin must be pulled low and the user needs to wait for at least five milliseconds before sending the data. Pulling the UART_RX_IND pin low allows the module to operate the 16 MHz clock and to enable UART.
Pairing Key	Use this pin to force the module to enter Standby mode. The pin must be pulled down for at least 160 ms.
Inquiry Control	This pin forces the module to enter Inquiry mode (BT Classic). The pin must be pulled low for at least 240 ms for the device to enter Inquiry mode.
Profile_IND	This pin is used to indicate whether the current connection is in BR/EDR (BT Classic) or in Bluetooth® Low Energy (BLE). If the Profile_IND pin is high, then the current connection is a BR/EDR connection. If low, then the current connection is a BLE connection. This pin is valid only for the Link state.

2.4 Power Tree

Figure 2-1 illustrates the power tree diagram of the RN4678.

FIGURE 2-1: POWER TREE DIAGRAM

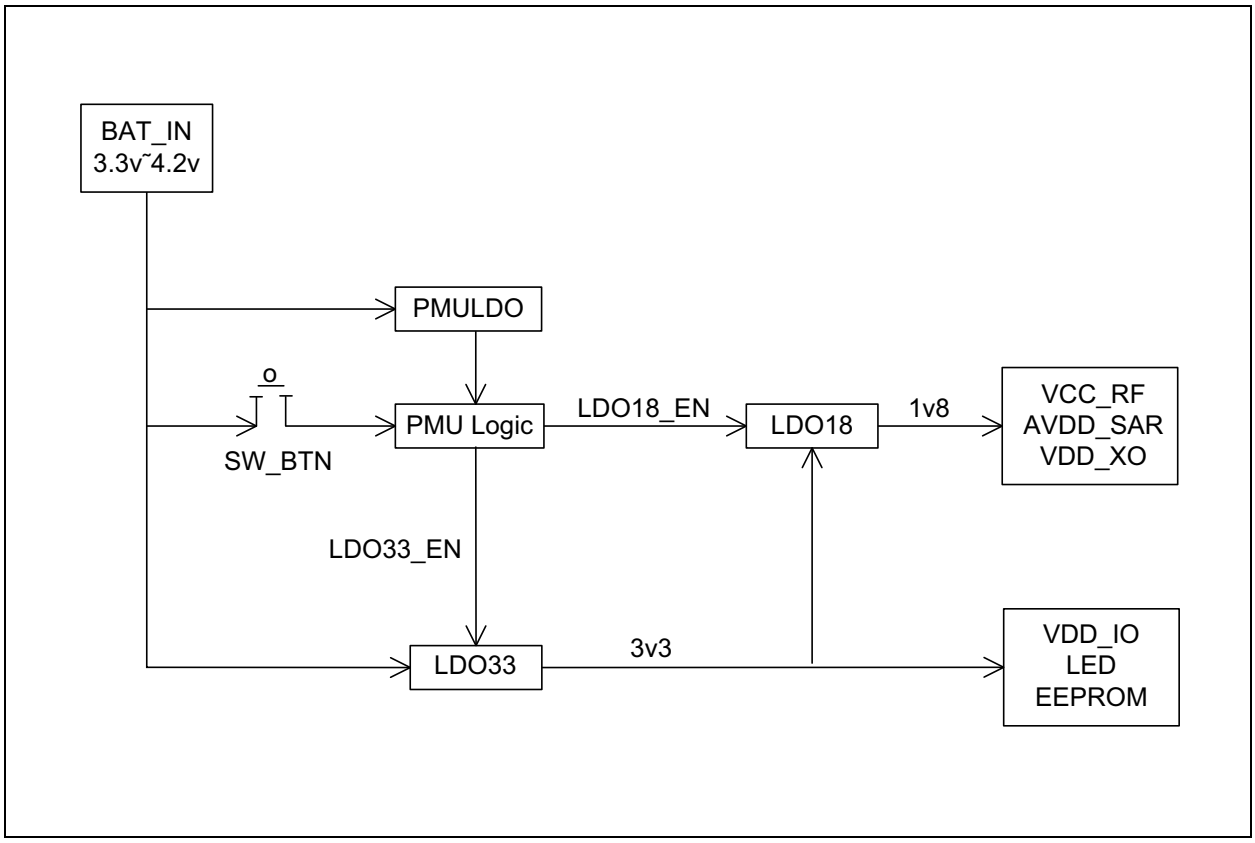

2.5 Software Button (SW_BTN)

The Software Button (SW_BT) pin powers the main sections of the module into operation. If the SW_BTN pin is low, the module is turned off. After turning the module on via the SW_BTN, the host MCU must wait for a specific time before sending the first command. The timing diagrams for the SW_BTN, other related pins and the time delay are required before the host MCU sends the first command.

Note: By default, the SW_BTN functionality is disabled and it can be enabled using the host MCU commands. Refer to the "*RN4678 Command Reference User's Guide*" (DS50002506) for more details.

Figure 2-2 through Figure 2-4 show the timing diagrams for the RN4678 with regard to the SW_BTN and the other relevant pins in different states of the module.

FIGURE 2-2: SW_BTN TIME (HIGH) AT APP MODE(1,2)

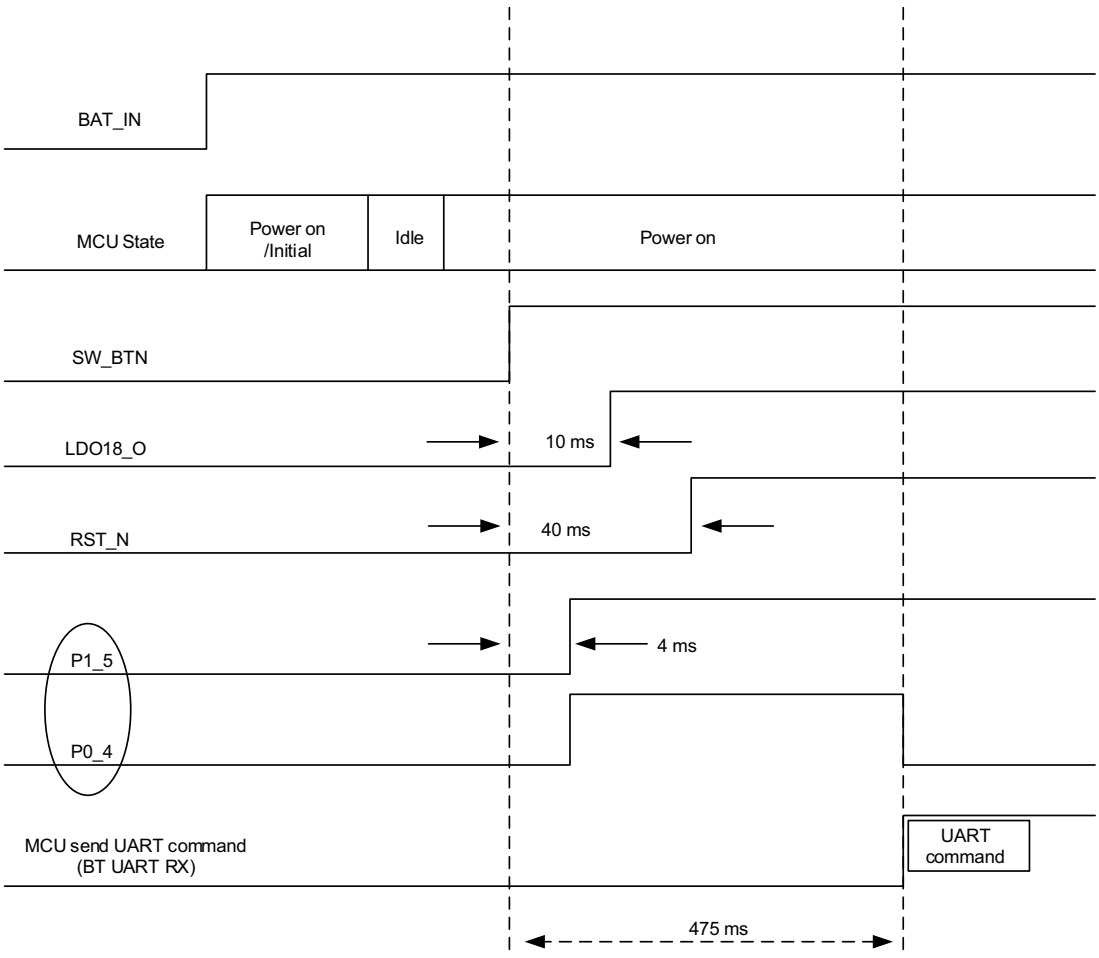

Note 1: Time duration (475 ms) is for reference purposes only. Use the Status Indication pins to verify the exact time when the host MCU can start sending the commands.

2: Reset pin is *not* connected.

FIGURE 2-3: SW_BTN TIME (LOW) AT ACCESS STATES(1)

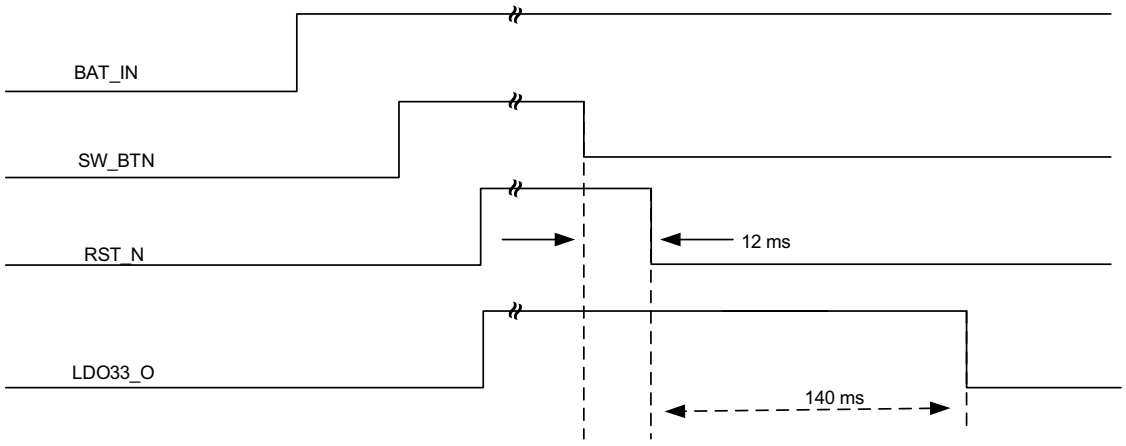

Note 1: Reset pin is *not* connected.

FIGURE 2-4: SW_BTN TIME (LOW) AT LINK STATES(1,2)

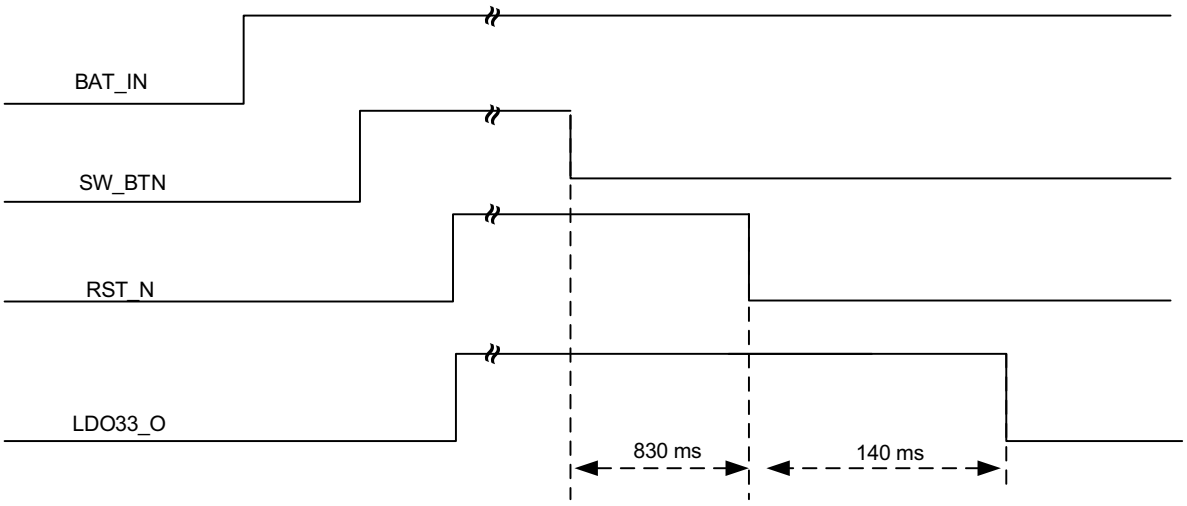

Note 1: 830 ms time duration is a typical value measured on iPhone® 6 and this time duration can vary from one smartphone to another.

2: Reset pin is *not* connected.

2.6 Wake-up

The WAKEUP input pin wakes the RN4678 module from Deep Sleep mode. The WAKEUP pin is active-low and puts the module in Standby mode. Figure 2-5 illustrates the timing diagram of the RN4678 in the Wake-up mode.

FIGURE 2-5: WAKE-UP TIME(1)

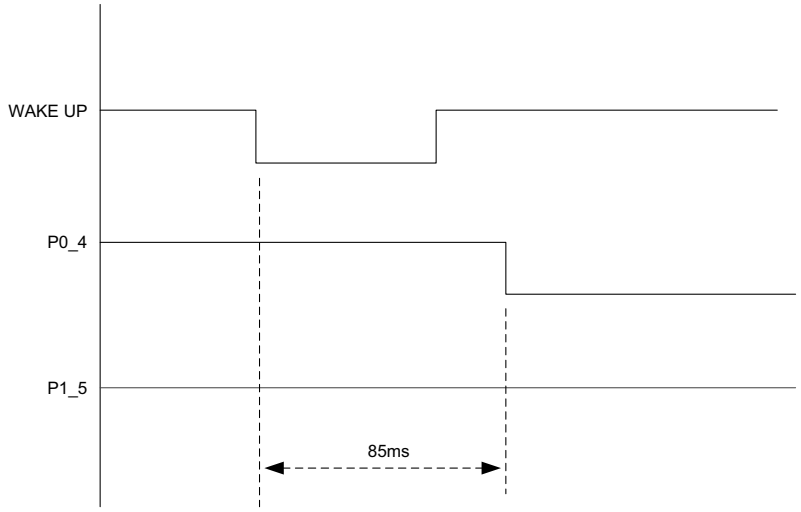

Note 1: The 85 ms is for reference time. Use the Status Indication pins to verify the exact results.

2.7 External Reset

The RN4678 provides an External Reset pin which resets the module. The Reset pin, RST_N, is active-low. Figure 2-6 shows the timing diagram for the RST_N pin of the RN4678 module.

FIGURE 2-6: TIMING WAVEFORMS ON RESET(1,2)

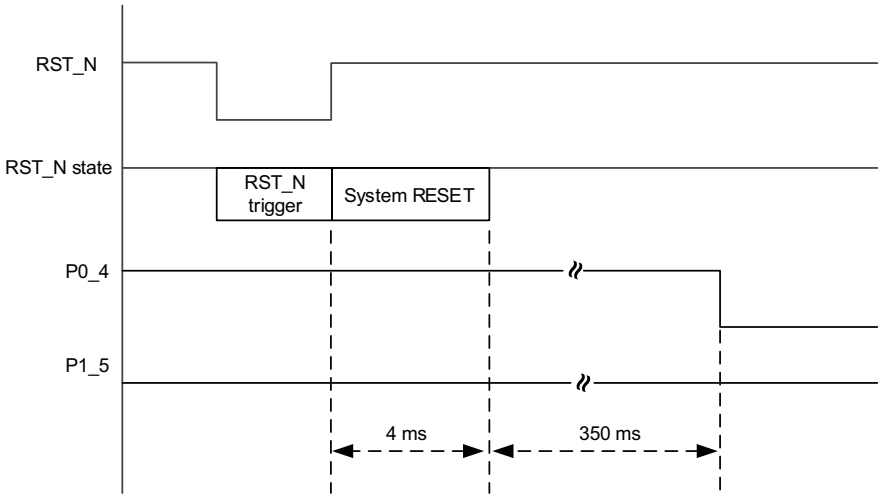

Note 1: The RST_N state trigger must be greater than 63 ns.
2: Time duration (350 ms) is for reference purpose only. Use the Status Indication pins to verify the exact results.

2.8 LED Driver

The RN4678 has a dedicated LED driver and the LED can be connected directly to this pin, as shown in Figure 2-7.

The maximum current sourcing for the LED is 5 mA. The brightness of this LED can be configured via an ASCII command.

FIGURE 2-7: LED DRIVER

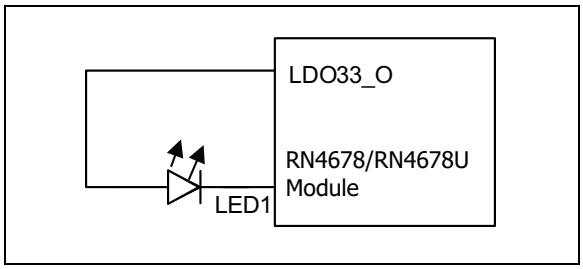

The following are the LED status indications. Each indication is a configurable flashing sequence:

- Standby
- Link Back
- Low Battery
- Inquiry
- Link

2.9 Host MCU Interface Over UART

Figure 2-8 illustrates an example of the UART interface with host MCU and a power scheme using 3.3V to the VDD. From the LDO33_O pin, voltage can be routed to the VDD_IO pin and the external circuitry, including the MCU. This power scheme ensures that the RN4678 and the MCU I/O voltages are compatible.

Note:	The internal 3.3V LDO current source must *not* exceed 50 mA (maximum).

FIGURE 2-8: POWER AND MCU INTERFACE EXAMPLE FOR RN4678

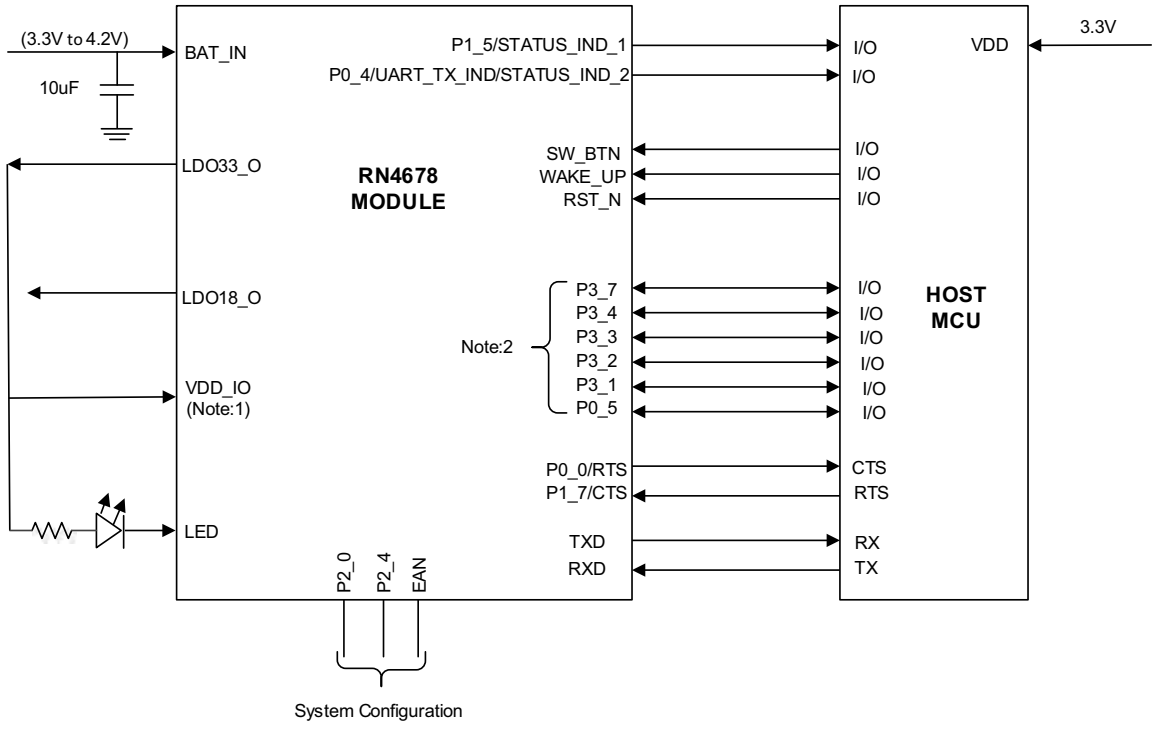

Note 1: Ensure that VDD_IO and MCU VDD voltages are compatible.
2: The control and indication ports are configurable.

© 2016-2021 Microchip Technology Inc.

2.10 Reference Circuit

Figure 2-9 illustrates the reference schematic of the power supply design implemented for the RN4678.

FIGURE 2-9: RN4678 REFERENCE CIRCUIT

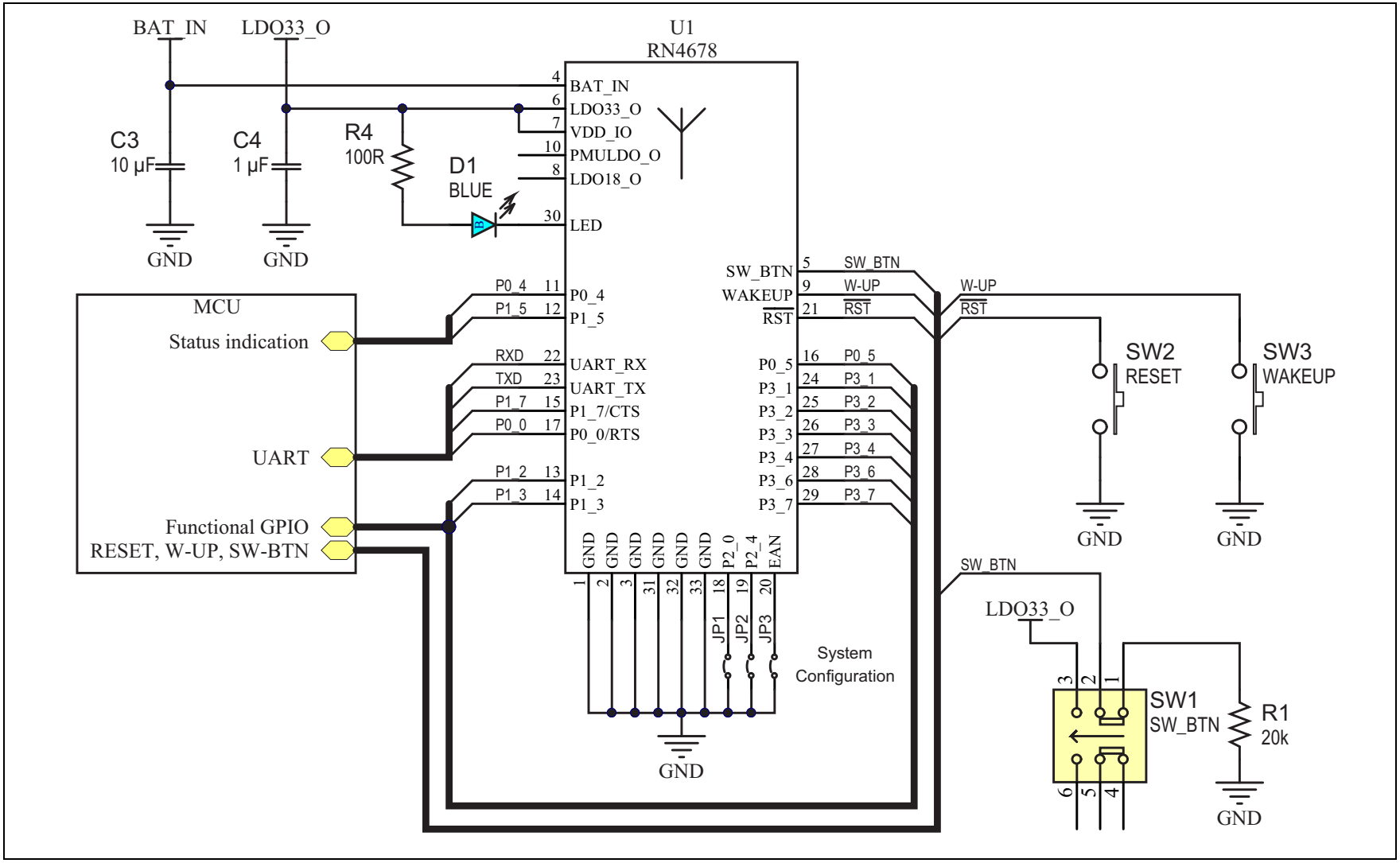

3.0 ELECTRICAL CHARACTERISTICS

This section provides an overview of the electrical characteristics of the RN4678 module. Additional information is provided in future revisions of this document as it becomes available.

Absolute maximum ratings for the RN4678 devices are listed below. Exposure to these maximum rating conditions for extended periods may affect device reliability. Functional operation of the device at these or any other conditions, above the parameters indicated in the operation listings of this specification, is *not* implied.

Absolute Maximum Ratings

Ambient temperature under bias ..... -20°C to +70°C
Storage temperature ..... -40°C to +125°C
Voltage on V_{DD} with respect to V_{SS} ..... -0.3V to +3.6V
Maximum output current sunk by any I/O pin ..... 12 mA
Maximum output current sourced by any I/O pin ..... 12 mA

Note: Stresses above those listed under **"Absolute Maximum Ratings"** may cause permanent damage to the device. This is a stress rating only and functional operation of the device at those or any other conditions, above those indicated in the operation listings of this specification, is *not* implied. Exposure to maximum rating conditions for extended periods may affect device reliability.

Table 3-1 through Table 3-7 provide the recommended operating conditions and the electrical specifications of the module.

TABLE 3-1: RECOMMENDED OPERATING CONDITIONS

Rating		Min.	Typical	Max.
Ambient Operating Temperature Range		-20ºC	+25ºC	+70ºC
Relative Humidity (Operating)		10%	—	90%
Relative Humidity (Storage)		10%	—	90%
ESD	HBM	—	±2 KV	—
	MM	—	±200V	—
HTOL(1)		—	1000 hrs	—
Supply Voltage: BAT_IN		3.3V	—	4.2V
Supply Voltage: 1V8, VCC_RF, VDD_XO, AVDD_SAR		1.8V	1.9V	2.1V
SW_BTN		3.3V	—	4.2V
LED1		—	—	3.6V
Reset $V_{TH,res}$ Threshold Voltage		—	1.6V	—
V_{IL} Input Logic Level Low		-0.3V	—	0.8V
V_{IH} Input Logic Level High		2.0V	—	3.6V
V_{OL} Output Logic Level Low (I_{OI} = 12 mA)		—	—	0.4V
V_{OH} Output Logic Level High (I_{Oh} = 12 mA)		2.4V	—	—
RF Continuous TX Mode		—	—	43 mA
RF Continuous RX Mode		—	—	37 mA

Note 1: HTOL life test condition: +125ºC, BAT_IN = 4.2V, LDO33_O = 3.3V, LDO18_O = 1.9V.

TABLE 3-2: 3.3V LDO ELECTRICAL PARAMETERS(1,2)

Parameter	Min.	Typical	Max.	Unit
Operating Temperature	-20	—	+70	ºC
Output Current (V_{IN} = 3.6V/Load Regulation with 100 mV Drop)	—	100	—	mA
Quiescent Current (V_{IN} = 3.6V)	—	150	—	µA

Note 1: With 10 µF capacitor at LDO33_O as the condition for IP verification.

2: Output voltage can be calibrated using the MP tool.

TABLE 3-3: PMU LDO(1,2)

Parameter	Min.	Typical	Max.	Unit
Operating Temperature	-20	—	+70	ºC
Output Current (V_{IN} = 3.6V/Load Regulation with 0.3 mV Drop)	—	100	—	µA
Quiescent Current (V_{IN} = 3.6V)	—	120	—	µA

Note 1: With 1 µF capacitor at PMULDO_O as the condition for IP verification.

2: Output voltage can be calibrated by using the MP tool.

© 2016-2021 Microchip Technology Inc.

TABLE 3-4: SAR-ADC AND BATTERY VOLTAGE DETECTOR

Parameter	Min.	Typical	Max.	Unit
Operating Temperature	-20	—	+70	ºC
AVDD_SAR Power Supply	—	1.8	—	V
SAR_BAT Detection(1)	3.3	—	4.2	V
Resolution	—	10	—	bit
Operating Current (including band gap)	—	—	1	mA
Deep Sleep Current	—	—	1	µA

Note 1: SAR_BAT is connected with BAT_IN internally for battery voltage detection.

TABLE 3-5: INTENSITY CONTROLLABLE LED DRIVER

Parameter	Min.	Typical	Max.	Unit
Operating Temperature	-20	—	+70	ºC
Open-Drain Voltage	—	—	3.6	V
Current Step	—	0.3	—	mA
Programmable Current Range	0	—	5	mA
Intensity Control	—	16	—	step
Power-Down Open-Drain Current	—	—	1	µA
Deep Sleep Current	—	—	1	µA

TABLE 3-6: POWER CONSUMPTION-CLASSIC(1)

Test Condition	Current Consumption (avg.) (mA)	Remarks
Standby Mode	2.543	—
Deep Sleep Mode	0.281	—
Connected+Sniff, Master (no data)	0.710	No data were transmitted, Sniff interval = 500 ms
Connected+Sniff, Slave (no data)	0.70	No data were transmitted, Sniff interval = 500 ms
Data, Master	14.08	Data transmitted at 115200 bps, Block size = 500
Data, Slave	19.06	Data transmitted at 115200 bps, Block size = 500

Note 1: Classic BR/EDR and RX_IND functions are enabled.

© 2016-2021 Microchip Technology Inc.

TABLE 3-7: POWER CONSUMPTION-LOW ENERGY(1,2)

Test Condition	Current Consumption (avg.) (mA)	Remarks
Deep Sleep mode	0.28	—
LE Fast Advertising	2.09	LE fast advertising interval = 100 ms
	1.51	LE fast advertising interval = 160 ms
	0.63	LE fast advertising interval = 500 ms
	2.75	LE fast advertising interval = 100 ms + Beacon 100 ms
	0.83	LE fast advertising interval = 500 ms + Beacon 500 ms
Reduced Power Advertising	0.62	LE reduced power advertising interval = 961 ms
	1.65	LE reduced power advertising interval = 961 ms + Beacon 100 ms
	0.84	LE reduced power advertising interval = 961 ms + Beacon 500 ms
Connected (no data)	0.57	Connection interval = 1500 ms
	0.61	Connection interval = 600 ms
Connected (iPhone® 6 to module)	0.45	Connection interval = 500 ms
	0.60	Connection interval = 200 ms
Connected (module to iPhone 6)	6.6	Connection interval = 500 ms
	7.0	Connection interval = 200 ms

Note 1: Low energy RX_IND function is enabled.

2: Only low energy.

4.0 RADIO CHARACTERISTICS

Table 4-1 provides the transmitter performance characteristics of the RN678/RN4678U module.

TABLE 4-1: TRANSMITTER PERFORMANCE(1,2)

	Min.	Typical	Max.	Bluetooth® Specification	Unit
BDR Power	—	1.5	—	-6 ~ +4	dBm
EDR (2M/3M) Power	—	-1	—	-6 ~ +4	
LE Power	—	0.5	—	-20 ~ +10	

Note 1: The RF transmit power can be calibrated during production by using the MP Tool software and the MT8852 Bluetooth Test equipment.

2: Test condition: VCC RF = 1.80V, temperature = +25ºC.

Table 4-2 provides the receiver performance characteristics of the RN678/RN4678U module.

TABLE 4-2: RECEIVER PERFORMANCE(1)

	Min.	Typical	Max.	Bluetooth® Specification	Unit
BDR Sensitivity	—	-90	—	≤-70	dBm
EDR 2M Sensitivity	—	-90	—		
EDR 3M Sensitivity	—	-82	—		
LE Sensitivity	—	-92	—		

Note 1: Test condition: VCC RF = 1.80V, temperature = +25ºC.

© 2016-2021 Microchip Technology Inc.

5.0 PHYSICAL DIMENSIONS

Figure 5-1 illustrates the physical dimensions of the RN4678 module.

FIGURE 5-1: RN4678 MODULE DIMENSIONS

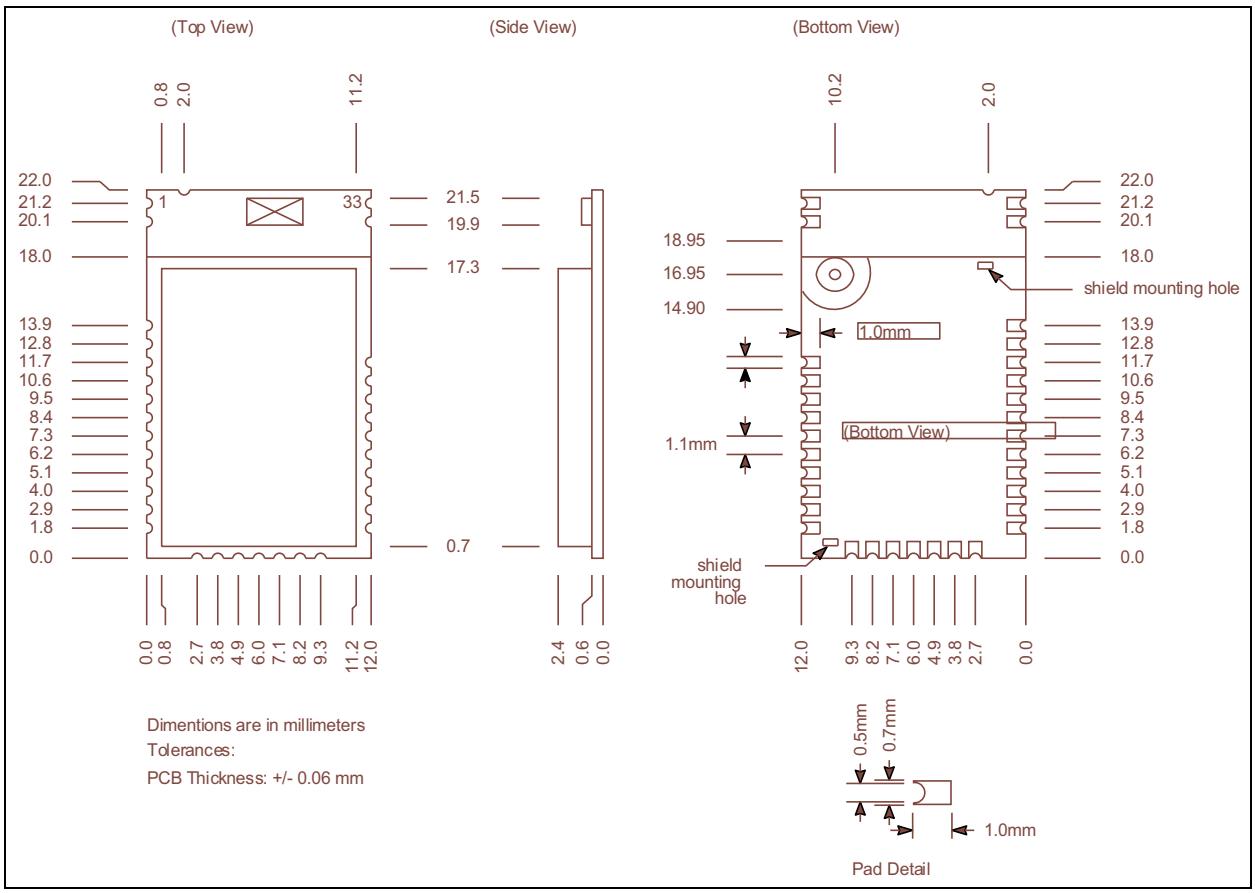

Figure 5-2 illustrates the recommended host PCB footprint.

FIGURE 5-2: RN4678 RECOMMENDED PCB FOOTPRINT

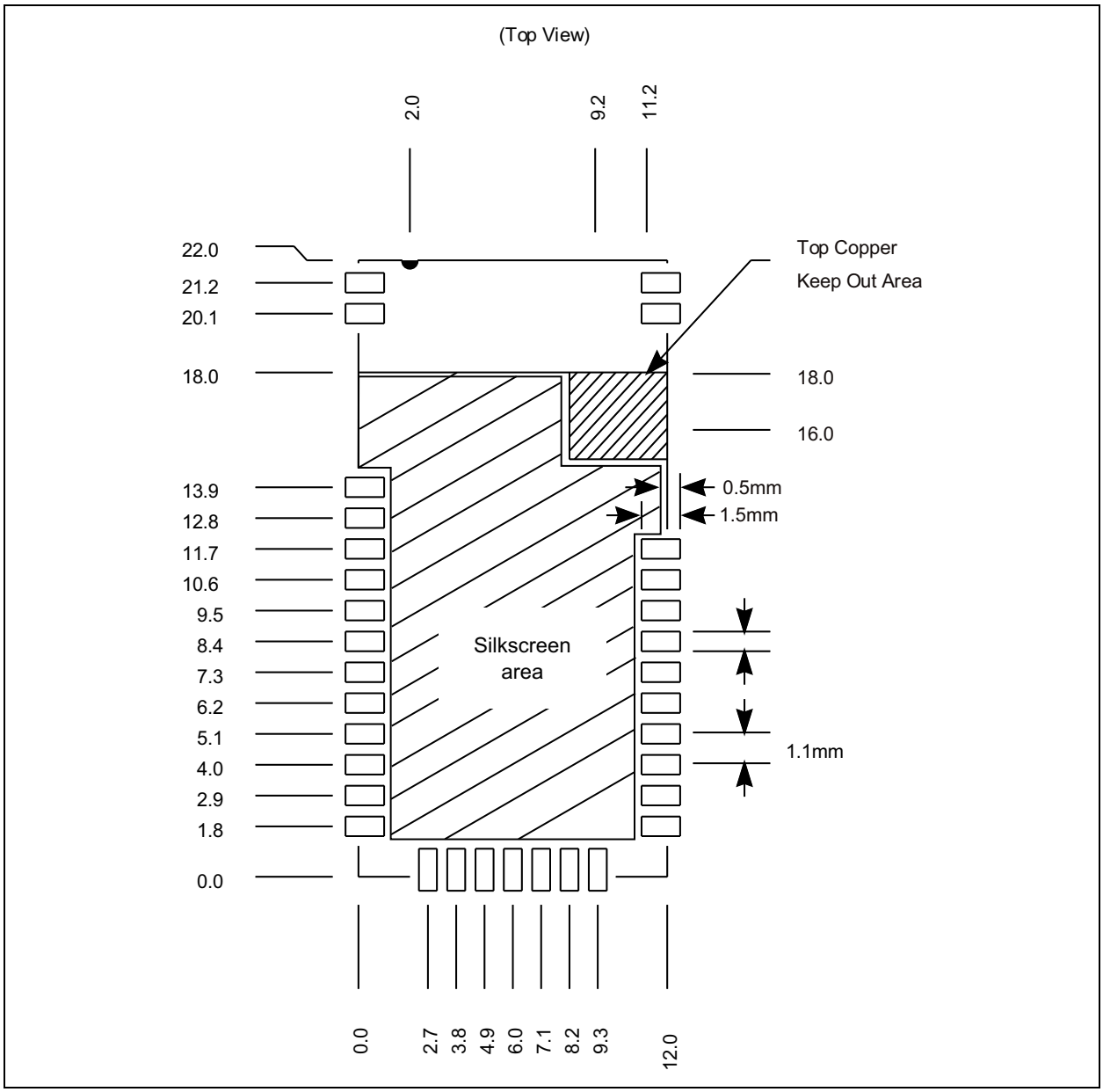

Figure 5-3 illustrates the recommendations for mounting the RN4678 on the host PCB, and also shows the minimum ground plane area to the left and right of the module for the best antenna performance.

Avoid the top copper layer near the test pin area. When designing the host PCB, the areas under the antenna must *not* contain any top, inner or bottom copper layer.

A low-impedance ground plane ensures best radio performance (best range and lowest noise). The ground plane can be extended beyond the minimum recommended as required for the host PCB EMC noise reduction. For best range performance, keep all external metal at least 31 mm away from the ceramic chip antenna.

FIGURE 5-3: RN4678 HOST PCB MOUNTING SUGGESTION

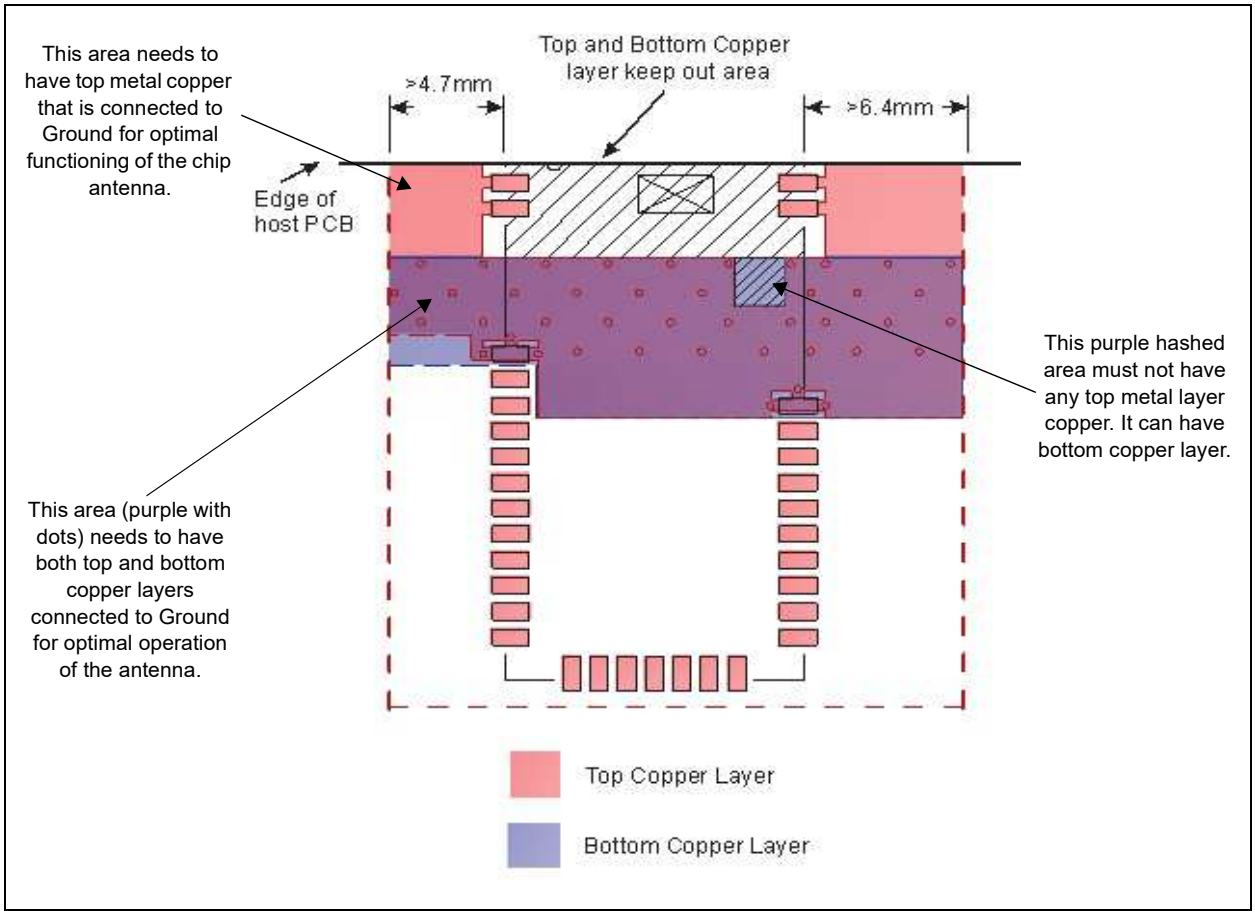

6.0 REFLOW PROFILE

It is highly recommended that the RN678/RN4678U be assembled using a standard lead-free reflow profile, IPC/JEDEC J-STD-020. The RN678/RN4678U can be soldered to the host PCB by using the standard leaded and lead-free solder reflow profile.

To avoid damage to the module, follow these recommendations:

- Follow solder reflow recommendations provided in Microchip Technology Application Note, *AN233 "Solder Reflow Recommendation"* (DS00233).
- Refer to the solder paste data sheet for specific reflow profile recommendations.
- Do *not* exceed the Peak Temperature (T_P) of +250ºC.
- Use no-clean flux solder paste.
- Do *not* wash as moisture can be trapped under the shield.
- Use only one flow. If the PCB requires multiple flows, apply the module on the final flow.

- Standard: IPC/JEDEC J-STD-020
  - Condition: Preheat: 150~200ºC for 60 ~ 120 seconds.
  - Average ramp-up rate (217ºC to peak): 3ºC/sec max.
  - Temperature maintained above 217ºC: 60 ~ 150 seconds.
  - Time within 5ºC of peak temperature: 30 ~ 40 seconds.
  - Peak temperature: 260ºC +5/-0.
  - Ramp-down rate (peak to 217ºC): 6ºC/sec. max.
  - Time 25ºC to peak temperature: 8 minutes max.
  - Cycle interval: 5 minutes.

FIGURE 6-1: REFLOW PROFILE

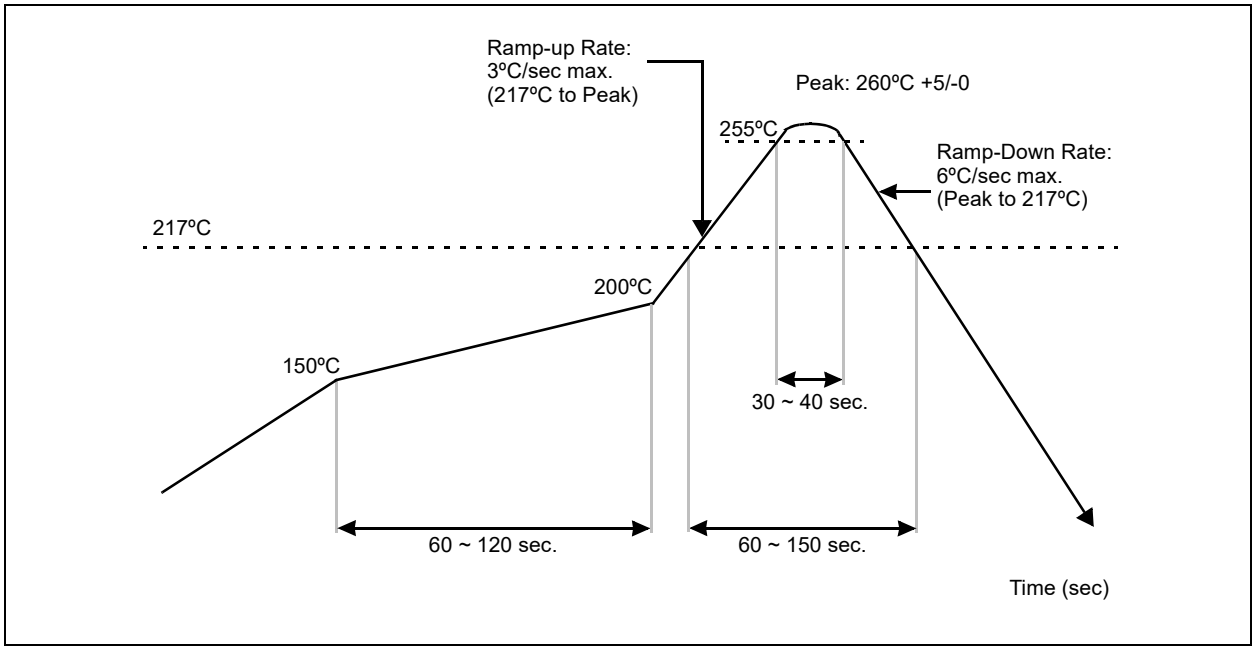

7.0 MODULE PLACEMENT

For a Bluetooth wireless product, the antenna placement affects the performance of the whole system. The antenna requires free space to radiate the RF signal and it *cannot* be surrounded by the ground plane. Microchip recommends that the areas underneath the antenna on the host PCB must *not* contain copper on the top, inner or bottom layer. Figure 7-1 illustrates an example of good and poor antenna placement on a host PCB with ground plane.

The ground plane can be extended beyond the minimum recommended, as required for the main PCB EMC noise reduction. For the best range performance, keep all external metal away from the ceramic chip antenna, that is, a minimum of 15 mm away.

FIGURE 7-1: MODULE PLACEMENT EXAMPLES

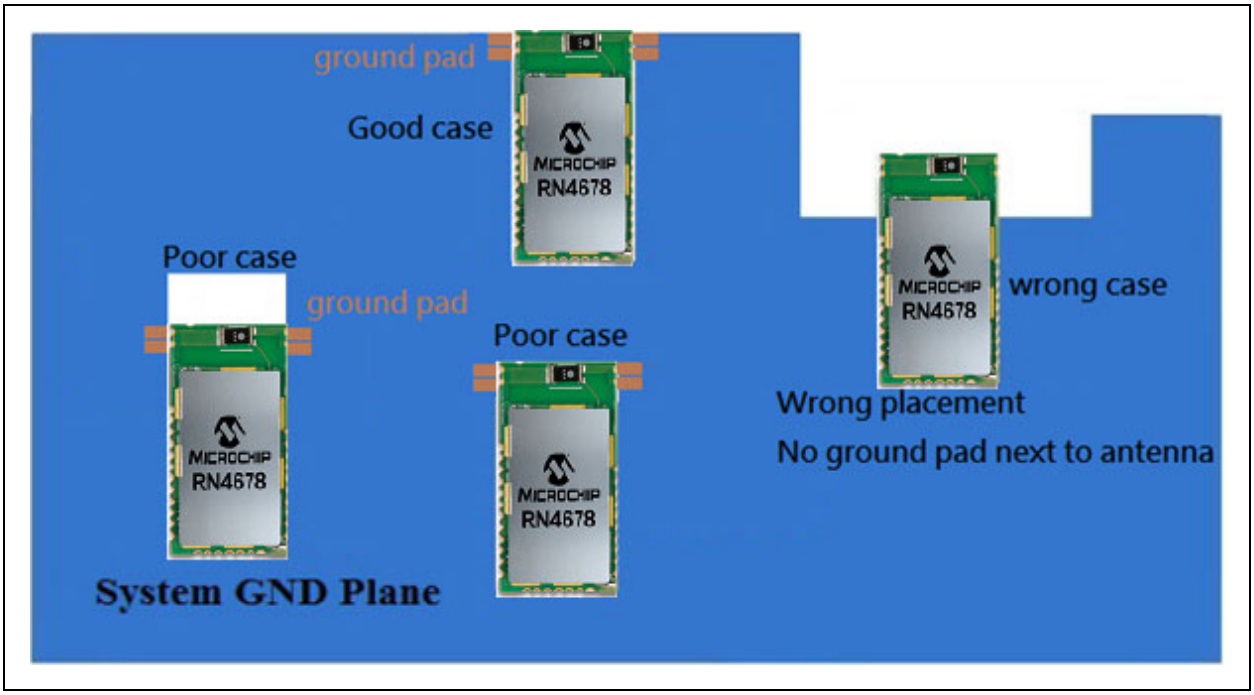

TABLE 7-1: RECOMMENDED ANTENNA

Description	Manufacturer Part Number	Manufacturer
ANT ANT3216A063R2400A, PIFA, 2.4 GHz, L3.2W1.6	ANT3216A063R2400A	Yageo Corp.

Figure 7-2 illustrates the RN4678 module mounted on the RN4678 Evaluation Board (EVB). It also shows the recommended keep out area for the antenna.

FIGURE 7-2: KEEP OUT AREA RECOMMENDED FOR ANTENNA

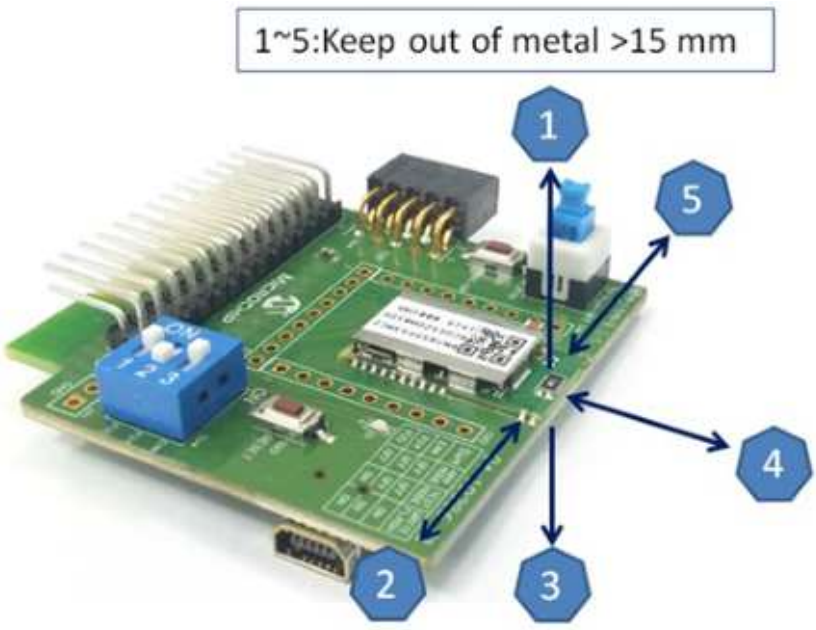

Note: For additional information on free space for antenna placement design, refer to the design rule document of the antenna manufacturer.

7.1 RN4678 Ceramic Chip Antenna

The RN4678 contains an integral ceramic chip antenna. Figure 7-3 illustrates the antenna radiation pattern of the ceramic chip antenna on the RN4678.

FIGURE 7-3: RN4678 ANTENNA RADIATION PATTERN

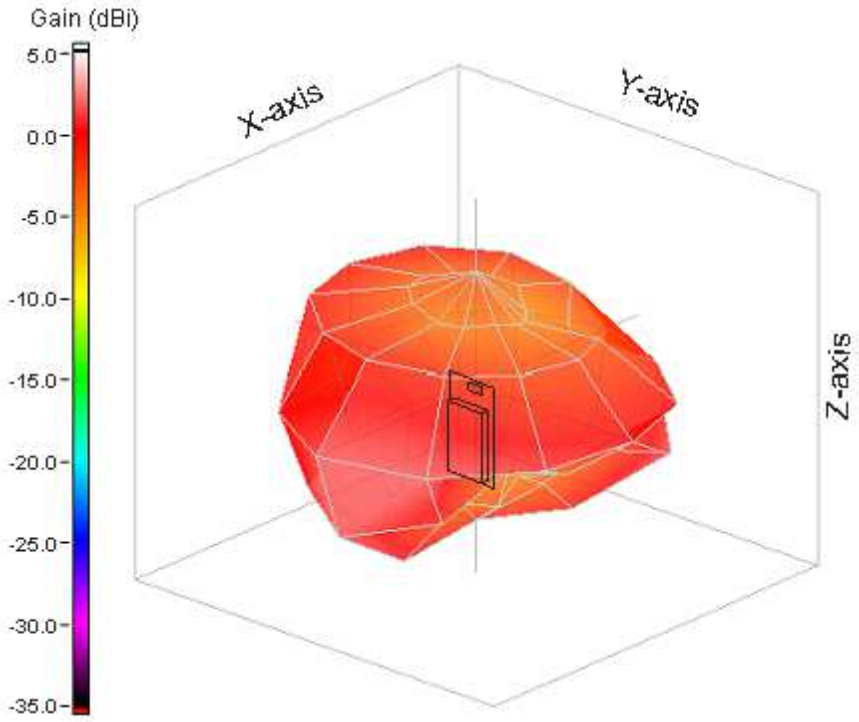

Parameter	Values
Frequency	2450 MHz
Peak Gain	1.63 dBi
Efficiency	71.55%

8.0 ORDERING INFORMATION

Table 8-1 provides ordering information for the RN678/RN4678U module.

TABLE 8-1: ORDERING INFORMATION

Device	Microchip IC	Antenna	Description	Shield	Regulatory Certification	Ordering Number
RN4678-V/RM100	IS1678SM	On-Board	BT Dual Mode, Class 2	Yes	FCC, ISED, RED, MIC, KCC, NCC, SRRC	RN4678-V/RM100
RN4678APL-V/RM100	IS1678SM	On-Board	BT Dual Mode, Class 2, Use with Apple® MFI	Yes	FCC, ISED, RED, MIC, KCC, NCC, SRRC	RN4678APL-V/RM100
RN4678-V/RM113	IS1678SM	On-Board	BT Dual Mode, Class 2	Yes	FCC, ISED, RED, MIC, KCC, NCC, SRRC	RN4678-V/RM113
RN4678APL-V/RM113	IS1678SM	On-Board	BT Dual Mode, Class 2	Yes	FCC, ISED, RED, MIC, KCC, NCC, SRRC	RN4678APL-V/RM113

Go to http://www.microchip.com for current pricing and a list of distributors carrying Microchip products.

© 2016-2021 Microchip Technology Inc.

9.0 REGULATORY APPROVAL

This section outlines the regulatory information for the RN4678 module for the following countries:

- United States
- Canada
- Europe
- Japan
- Korea
- Taiwan
- Other Regulatory Jurisdictions

9.1 United States

The RN4678 module has received Federal Communications Commission (FCC) CFR47 Telecommunications, Part 15 Subpart C “Intentional Radiators” single modular approval in accordance with Part 15.212 Modular Transmitter approval. Single modular transmitter approval is defined as a complete RF transmission sub-assembly, designed to be incorporated into another device, that must demonstrate compliance with FCC rules and policies independent of any host. A transmitter with a Modular Grant can be installed in different end-use products (referred to as a host, host product or host device) by the Grantee or other equipment manufacturer, then the host product may not require additional testing or equipment authorization for the transmitter function provided by that specific module or limited module device.

The user must comply with all of the instructions provided by the Grantee, which indicate installation and/or operating conditions necessary for compliance.

A host product itself is required to comply with all other applicable FCC equipment authorization regulations, requirements and equipment functions that are not associated with the transmitter module portion. For example, compliance must be demonstrated: to regulations for other transmitter components within a host product; to requirements for unintentional radiators (Part 15 Subpart B), such as digital devices, computer peripherals, radio receivers, etc.; and to additional authorization requirements for the non-transmitter functions on the transmitter module (i.e., Verification or Declaration of Conformity) as appropriate (e.g., Bluetooth and Wi-Fi® transmitter modules may also contain digital logic functions).

9.1.1 LABELING AND USER INFORMATION REQUIREMENTS

The RN4678 module has been labeled with its own FCC ID number, and if the FCC ID is not visible when the module is installed inside another device, then the outside of the finished product into which the module is installed must also display a label referring to the enclosed module. This exterior label can use wording as follows:

> Contains Transmitter Module
> FCC ID: A8TBM78ABCDEFGH
> *or*
> Contains FCC ID: A8TBM78ABCDEFGH
>
> **This device complies with Part 15 of the FCC Rules. Operation is subject to the following two conditions: (1) this device may not cause harmful interference, and (2) this device must accept any interference received, including interference that may cause undesired operation.**

A user’s manual for the product should include the following statement:

> This equipment has been tested and found to comply with the limits for a Class B digital device, pursuant to Part 15 of the FCC Rules. These limits are designed to provide reasonable protection against harmful interference in a residential installation. This equipment generates, uses and can radiate radio frequency energy, and if not installed and used in accordance with the instructions, may cause harmful interference to radio communications. However, there is no guarantee that interference will not occur in a particular installation. If this equipment does cause harmful interference to radio or television reception, which can be determined by turning the equipment off and on, the user is encouraged to try to correct the interference by one or more of the following measures:
> - Reorient or relocate the receiving antenna.
> - Increase the separation between the equipment and receiver.
> - Connect the equipment into an outlet on a circuit different from that to which the receiver is connected.
> - Consult the dealer or an experienced radio/TV technician for help.

Additional information on labeling and user information requirements for Part 15 devices can be found in KDB Publication 784748 available at the FCC Office of Engineering and Technology (OET) Laboratory Division Knowledge Database (KDB): http://apps.fcc.gov/oetcf/kdb/index.cfm.

© 2016-2021 Microchip Technology Inc.

9.1.2 RF EXPOSURE

All transmitters regulated by FCC must comply with RF exposure requirements. KDB Publication 447498 General RF Exposure Guidance provides guidance in determining whether proposed or existing transmitting facilities, operations or devices comply with limits for human exposure to Radio Frequency (RF) fields adopted by the Federal Communications Commission (FCC).

Output power listed is conducted. This grant is valid only when the module is sold to OEM integrators and must be installed by the OEM or OEM integrators. This transmitter is restricted for use with the specific antenna(s) tested in this application for Certification and must not be co-located or operating in conjunction with any other antenna or transmitters within a host device, except in accordance with FCC multitransmitter product procedures. This module is approved for installation into mobile or/and portable host platforms.

9.1.3 APPROVED ANTENNAS

To maintain modular approval in the United States, only the antenna types that have been tested shall be used. It is permissible to use a different antenna, provided it is the same antenna type, antenna gain (equal to or less than), with similar in-band and out-of-band characteristics (refer to specification sheet for cutoff frequencies).

For RN4678, the approval is received using an integral chip antenna.

9.1.4 HELPFUL WEBSITES

Federal Communications Commission (FCC):
http://www.fcc.gov

FCC Office of Engineering and Technology (OET) Laboratory Division Knowledge Database (KDB):
http://apps.fcc.gov/oetcf/kdb/index.cfm

9.2 Canada

The RN4678 module has been certified for use in Canada under Innovation, Science and Economic Development Canada (ISED, formerly Industry Canada), Radio Standards Procedure (RSP) RSP-100, Radio Standards Specification (RSS) RSS-Gen and RSS-247. Modular approval permits the installation of a module in a host device without the need to recertify the device.

9.2.1 LABELING AND USER INFORMATION REQUIREMENTS

Labeling Requirements (from RSP-100, Issue 12, Section 5): The host product shall be properly labeled to identify the module within the host device.

The Innovation, Science and Economic Development Canada certification label of a module shall be clearly visible at all times when installed in the host product; otherwise, the host device must be labeled to display the Innovation, Science and Economic Development Canada certification number of the module, preceded by the word, “Contains”, or similar wording expressing the same meaning, as follows:

Contains transmitter module IC: 12246A-BM78SPPS5M2

User Manual Notice for License-Exempt Radio Apparatus (from Section 8.4, RSS-Gen, Issue 5, March 2019): User manuals for license-exempt radio apparatus shall contain the following or equivalent notice in a conspicuous location in the user manual, or alternatively on the device or both:

This device contains license-exempt transmitter(s)/ receiver(s) that comply with Innovation, Science and Economic Development Canada’s license-exempt RSS(s). Operation is subject to the following two conditions: 1. This device may not cause interference; 2. This device must accept any interference, including interference that may cause undesired operation of the device. L’émetteur/récepteur exempt de licence contenu dans le présent appareil est conforme aux CNR d’Innovation, Sciences et Développement économique Canada applicables aux appareils radio exempts de licence. L’exploitation est autorisée aux deux conditions suivantes: 1. L’appareil ne doit pas produire de brouillage; 2. L’appareil doit accepter tout brouillage radioélectrique subi, même si le brouillage est susceptible d’en compromettre le fonctionnement.

Transmitter Antenna (from Section 6.8 RSS-GEN, Issue 5, March 2019): User manuals for transmitters shall display the following notice in a conspicuous location:

> This radio transmitter [IC: 12246A-BM78SPPS5M2] has been approved by Innovation, Science and Economic Development Canada to operate with the antenna types listed below, with the maximum permissible gain indicated. Antenna types not included in this list that have a gain greater than the maximum gain indicated for any type listed are strictly prohibited for use with this device.
>
> Le présent émetteur radio
>
> [IC: 12246A-BM78SPPS5M2] a été approuvé par Innovation, Sciences et Développement économique Canadapour fonctionner avec les types d'antenne énumérés cidessous et ayant un gain admissible maximal Les types d'antenne non inclus dans cette liste, et dont le gain est supérieur au gain maximal indiqué pour tout type figurant sur la liste, sont strictement interdits pour l'exploitation de l'émetteur.

Immediately following the above notice, the manufacturer shall provide a list of all antenna types approved for use with the transmitter, indicating the maximum permissible antenna gain (in dBi) and required impedance for each.

9.2.2 RF EXPOSURE

All transmitters regulated by the Innovation, Science and Economic Development Canada (ISED) must comply with RF exposure requirements listed in RSS-102 - Radio Frequency (RF) Exposure Compliance of Radiocommunication Apparatus (All Frequency Bands).

This transmitter is restricted for use with a specific antenna tested in this application for certification and must not be co-located or operating in conjunction with any other antenna or transmitters, except in accordance with Innovation, Science and Economic Development Canada multitransmitter guidelines.

The device operates at an output power level which is within the ISED SAR test exemption limits at any user distance.

9.2.3 APPROVED ANTENNAS

For RN4678, the approval is received using an integral chip antenna.

9.2.4 HELPFUL WEBSITES

Innovation, Science and Economic Development Canada (ISED): http://www.ic.gc.ca/.

9.3 Europe

The RN4678 module is Radio Equipment Directive (RED) assessed, CE marked, and has been manufactured and tested with the intention of being integrated into a final product.

The RN4678 module has been tested to RED 2014/53/EU Essential Requirements mentioned in the following European Compliance table.

TABLE 9-1: EUROPEAN COMPLIANCE

Certification	Standards	Article
Safety	EN 62368	3.1a
Health	EN 62311	
Electromagnetic Compatibility (EMC)	EN 301 489-1	3.1b
	EN 301 489-17	
Radio	EN300 328	3.2

The ETSI provides guidance on modular devices in "*Guide to the application of harmonised standards covering Article 3.1b and Article 3.2 of the Directive 2014/53/EU RED to multi-radio and combined radio and non-radio equipment*" document available at: http://www.etsi.org/deliver/etsi_eg/203300_203399/203367/01.01.01_60/eg_203367v010101p.pdf.

> **Note:** To maintain conformance to the standards listed in the preceding European Compliance table, the module shall be installed in accordance with the installation instructions in this data sheet and shall not be modified. When integrating a radio module into a completed product, the integrator becomes the manufacturer of the final product and is therefore responsible for demonstrating compliance of the final product with the essential requirements against the RED.

9.3.1 LABELING AND USER INFORMATION REQUIREMENTS

The label on the final product which contains the RN4678 module must follow CE marking requirements.

9.3.2 CONFORMITY ASSESSMENT

From ETSI Guidance Note EG 203367, Section 6.1, non-radio products are combined with a radio product:

If the manufacturer of the combined equipment installs the radio product in a host non-radio product in equivalent assessment conditions (i.e., host equivalent to the one used for the assessment of the radio product) and according to the installation instructions for the radio product, then no additional assessment of the combined equipment against Article 3.2 of the RED is required.

9.3.2.1 Simplified EU Declaration of Conformity

Hereby, Microchip Technology Inc. declares that the radio equipment type RN4678 is in compliance with Directive 2014/53/EU.

The full text of the EU declaration of conformity for this product is available at: https://www.microchip.com/wwwproducts/en/RN4678 (available under *Documents* > *Certifications*).

9.3.3 APPROVED ANTENNAS

For RN4678, the approval is received using an integral chip antenna.

9.3.4 HELPFUL WEBSITES

A document that can be used as a starting point in understanding the use of Short Range Devices (SRD) in Europe is the European Radio Communications Committee (ERC) Recommendation 70-03 E, which can be downloaded from the European Radio Communications Committee (ECC) at: http://www.ecodocdb.dk/.

Additional helpful websites are:

- Radio Equipment Directive (2014/53/EU): https://ec.europa.eu/growth/single-market/european-standards/harmonised-standards/red_en
- European Conference of Postal and Telecommunications Administrations (CEPT): http://www.cept.org
- European Telecommunications Standards Institute (ETSI): http://www.etsi.org
- The Radio Equipment Directive Compliance Association (REDCA): http://www.redca.eu/

9.4 Japan

The RN4678 module has received type certification, and is labeled with its own technical conformity mark and certification number as required to conform to the technical standards regulated by the Ministry of Internal Affairs and Communications (MIC) of Japan pursuant to the Radio Act of Japan.

Integration of this module into a final product does not require additional radio certification provided installation instructions are followed and no modifications of the module are allowed. Additional testing may be required:

- If the host product is subject to electrical appliance safety (for example, powered from an AC mains), the host product may require Product Safety Electrical Appliance and Material (PSE) testing. The integrator must contact their conformance laboratory to determine if this testing is required.
- There is a voluntary Electromagnetic Compatibility (EMC) test for the host product administered by VCCII: http://www.vcci.jp/vcci_e/index.html.

9.4.1 LABELING AND USER INFORMATION REQUIREMENTS

The label on the final product which contains the RN4678 module must follow Japan marking requirements. The integrator of the module must refer to the labeling requirements for Japan available at the Ministry of Internal Affairs and Communications (MIC) website.

The RN4678 module is labeled with its own technical conformity mark and certification number. The final product in which this module is being used must have a label referring to the type certified module inside:

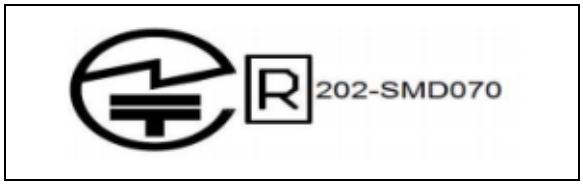

9.4.2 HELPFUL WEBSITES

Ministry of Internal Affairs and Communications (MIC): http://www.tele.soumu.go.jp/e/index.htm

Association of Radio Industries and Businesses (ARIB): http://www.arib.or.jp/english/

9.5 Korea

The RN4678 module has received certification of conformity in accordance with the Radio Waves Act. Integration of this module into a final product does not require additional radio certification provided installation instructions are followed and no modifications of the module are allowed.

9.5.1 LABELING AND USER INFORMATION REQUIREMENTS

The label on the final product which contains the RN4678 module must follow KC marking requirements. The integrator of the module should refer to the labeling requirements for Korea available on the Korea Communications Commission (KCC) website.

The RN4678 module is labeled with its own KC mark. The final product requires the KC mark and certificate number of the module:



9.5.2 HELPFUL WEBSITES

Korea Communications Commission (KCC):
http://www.kcc.go.kr

National Radio Research Agency (RRA):
http://rra.go.kr

9.6 Taiwan

The RN4678 module has received compliance approval in accordance with the Telecommunications Act. Customers seeking to use the compliance approval in their product must contact Microchip Technology sales or distribution partners to obtain a Letter of Authority.

Integration of this module into a final product does not require additional radio certification provided installation instructions are followed and no modifications of the module are allowed.

9.6.1 LABELING AND USER INFORMATION REQUIREMENTS

For the RN4678 module, due to limited module size, the NCC mark and ID are displayed in the data sheet and/or packaging, and cannot be displayed on the module label:

CCAN15LP0511T6

The user's manual must contain below warning (for RF device) in traditional Chinese:

注意！

依據 低功率電波輻射性電機管理辦法

第十二條 經型式認證合格之低功率射頻電機，非經許可，

公司、商號或使用者均不得擅自變更頻率、加大功率或變更原設計

之特性及功能。

第十四條 低功率射頻電機之使用不得影響飛航安全及干擾合法通信；

經發現有干擾現象時，應立即停用，並改善至無干擾時方得繼續使用。

前項合法通信，指依電信規定作業之無線電信。

低功率射頻電機須忍受合法通信或工業、科學及醫療用電波輻射性

電機設備之干擾。

9.6.2 HELPFUL WEBSITES

National Communications Commission (NCC):
http://www.ncc.gov.tw

9.7 China

The RN4678 module has received certification of conformity in accordance with the China MIIT Notice 2014-01 of State Radio Regulation Committee (SRRC) certification scheme. Integration of this module into a final product does not require additional radio certification provided installation instructions are followed and no modifications of the module are allowed.

For expiry date, refer to SRRC certificate available at:
https://www.microchip.com/wwwproducts/en/RN4678

9.7.1 LABELING AND USER INFORMATION REQUIREMENTS

The RN4678 module is labeled with its own CMIIT ID as follows:

CMIIT ID: 2016DJ5735

When the host system is using an approved Full Modular Approval (FMA) radio: The host must bear a label containing the statement, "This device contains SRRC approved Radio module CMIIT ID: 2016DJ5735".

Refer to the SRRC certificate available in the RN4678 product page for expiry date.

9.8 Other Regulatory Information

- For information about other countries' jurisdictions not covered here, refer to:
  www.microchip.com/RN4678
  (available under *Documents>Certifications*).
- Should other regulatory jurisdiction certification be required by the customer, or the customer needs to recertify the module for other reasons, contact Microchip for the required utilities and documentation.

APPENDIX A: REVISION HISTORY

Revision F (February 2021)

- Updated Table 1-1.
- Updated **Section 9.2.1 “Labeling and User Information Requirements”**.
- Added **Section 9.1.3 “Approved Antennas”**.
- Added **Section 9.2.3 “Approved Antennas”**.
- Updated **Section 9.3 “Europe”**.
- Updated **Section 9.7 “China”**.

Revision E (February 2020)

Updated Figure 2-9.

Revision D (May 2019)

Updated China labeling ID in **Section 9.7.1 “Labeling and User Information Requirements”**.

TABLE A-1: MAJOR SECTION UPDATES

Section	Description
“Features”	Updated certification information
“Data Throughput”	Updated Kbytes/s
Section 1.0 “Device Overview”	Updated Figure 1-1 and Table 1-1
Section 2.0 “Application Information”	• Updated Table 2-3 • Added SW_BTN note in **Section 2.5 “Software Button (SW_BTN)”**
Section 3.0 “Electrical Characteristics”	• Updated storage temperature • Updated current consumption values in Table 3-6 and Table 3-7
Section 5.0 “Physical Dimensions”	Updated Figure 5-1 and Figure 5-2
Section 8.0 “Ordering Information”	Updated Table 8-1 with certification information
Section 9.0 “Regulatory Approval”	• Updated IC to ISED in **Section 9.2 “Canada”** • Updated RED certification information in **Section 9.3 “Europe”** • Updated **Section 9.6 “Taiwan”** • Added **Section 9.7 “China”**

Revision C (March 2019)

This revision includes the following changes and minor updates to text and formatting, which were incorporated throughout the document.

Revision B (January 2018)

- Updated Figure 1-1, Figure 1-2, and Figure 5-3.
- Updated Table 1-1.
- Added **Section 2.2 “Flow Control”**.
- Updated **Section 8.0 “Ordering Information”**
- Updated **Section “Product Identification System”**
- Removed Figure 1-3, Figure 2-9, Figure 5-4, Figure 5-5, and Figure 5-6.

Revision A (June 2016)

This is the initial released version of the document.

© 2016-2021 Microchip Technology Inc.

THE MICROCHIP WEBSITE

Microchip provides online support via our WWW site at www.microchip.com. This website is used as a means to make files and information easily available to customers. Accessible by using your favorite Internet browser, the website contains the following information:

- **Product Support** – Data sheets and errata, application notes and sample programs, design resources, user's guides and hardware support documents, latest software releases and archived software
- **General Technical Support** – Frequently Asked Questions (FAQ), technical support requests, online discussion groups, Microchip consultant program member listing
- **Business of Microchip** – Product selector and ordering guides, latest Microchip press releases, listing of seminars and events, listings of Microchip sales offices, distributors and factory representatives

CUSTOMER CHANGE NOTIFICATION SERVICE

Microchip's customer notification service helps keep customers current on Microchip products. Subscribers will receive e-mail notification whenever there are changes, updates, revisions or errata related to a specified product family or development tool of interest.

To register, access the Microchip website at www.microchip.com. Under "Support", click on "Customer Change Notification" and follow the registration instructions.

CUSTOMER SUPPORT

Users of Microchip products can receive assistance through several channels:

- Distributor or Representative
- Local Sales Office
- Field Application Engineer (FAE)
- Technical Support

Customers should contact their distributor, representative or Field Application Engineer (FAE) for support. Local sales offices are also available to help customers. A listing of sales offices and locations is included in the back of this document.

Technical support is available through the website at: http://microchip.com/support

© 2016-2021 Microchip Technology Inc.

PRODUCT IDENTIFICATION SYSTEM

To order or obtain information, for example, on pricing or delivery, refer to the factory or the listed sales office.

PART NO.	V	RM	XXX
Device	Temperature Range	Package	Firmware Revision Number

Device:	RN4678:	Ceramic Chip Antenna	
Temperature Range:	V	=	-20°C to +70°C (Various)
Package:	RM	=	Radio Module

Example:

RN4678-V/RM100: Various temperature

Note the following details of the code protection feature on Microchip devices:

- Microchip products meet the specifications contained in their particular Microchip Data Sheet.
- Microchip believes that its family of products is secure when used in the intended manner and under normal conditions.
- There are dishonest and possibly illegal methods being used in attempts to breach the code protection features of the Microchip devices. We believe that these methods require using the Microchip products in a manner outside the operating specifications contained in Microchip's Data Sheets. Attempts to breach these code protection features, most likely, cannot be accomplished without violating Microchip's intellectual property rights.
- Microchip is willing to work with any customer who is concerned about the integrity of its code.
- Neither Microchip nor any other semiconductor manufacturer can guarantee the security of its code. Code protection does not mean that we are guaranteeing the product is "unbreakable." Code protection is constantly evolving. We at Microchip are committed to continuously improving the code protection features of our products. Attempts to break Microchip's code protection feature may be a violation of the Digital Millennium Copyright Act. If such acts allow unauthorized access to your software or other copyrighted work, you may have a right to sue for relief under that Act.

Information contained in this publication is provided for the sole purpose of designing with and using Microchip products. Information regarding device applications and the like is provided only for your convenience and may be superseded by updates. It is your responsibility to ensure that your application meets with your specifications.

THIS INFORMATION IS PROVIDED BY MICROCHIP "AS IS". MICROCHIP MAKES NO REPRESENTATIONS OR WARRANTIES OF ANY KIND WHETHER EXPRESS OR IMPLIED, WRITTEN OR ORAL, STATUTORY OR OTHERWISE, RELATED TO THE INFORMATION INCLUDING BUT NOT LIMITED TO ANY IMPLIED WARRANTIES OF NON-INFRINGEMENT, MERCHANTABILITY, AND FITNESS FOR A PARTICULAR PURPOSE OR WARRANTIES RELATED TO ITS CONDITION, QUALITY, OR PERFORMANCE.

IN NO EVENT WILL MICROCHIP BE LIABLE FOR ANY INDIRECT, SPECIAL, PUNITIVE, INCIDENTAL OR CONSEQUENTIAL LOSS, DAMAGE, COST OR EXPENSE OF ANY KIND WHATSOEVER RELATED TO THE INFORMATION OR ITS USE, HOWEVER CAUSED, EVEN IF MICROCHIP HAS BEEN ADVISED OF THE POSSIBILITY OR THE DAMAGES ARE FORESEEABLE. TO THE FULLEST EXTENT ALLOWED BY LAW, MICROCHIP'S TOTAL LIABILITY ON ALL CLAIMS IN ANY WAY RELATED TO THE INFORMATION OR ITS USE WILL NOT EXCEED THE AMOUNT OF FEES, IF ANY, THAT YOU HAVE PAID DIRECTLY TO MICROCHIP FOR THE INFORMATION. Use of Microchip devices in life support and/or safety applications is entirely at the buyer's risk, and the buyer agrees to defend, indemnify and hold harmless Microchip from any and all damages, claims, suits, or expenses resulting from such use. No licenses are conveyed, implicitly or otherwise, under any Microchip intellectual property rights unless otherwise stated.

For information regarding Microchip's Quality Management Systems, please visit www.microchip.com/quality.

Trademarks

The Microchip name and logo, the Microchip logo, Adaptec, AnyRate, AVR, AVR logo, AVR Freaks, BesTime, BitCloud, chipKIT, chipKIT logo, CryptoMemory, CryptoRF, dsPIC, FlashFlex, flexPWR, HELDO, IGLOO, JukeBlox, KeeLoq, Kleer, LANCheck, LinkMD, maXStylus, maXTouch, MediaLB, megaAVR, Microsemi, Microsemi logo, MOST, MOST logo, MPLAB, OptoLyzer, PackeTime, PIC, picoPower, PICSTART, PIC32 logo, PolarFire, Prochip Designer, QTouch, SAM-BA, SenGenuity, SpyNIC, SST, SST Logo, SuperFlash, Symmetricom, SyncServer, Tachyon, TimeSource, tinyAVR, UNI/O, Vectron, and XMEGA are registered trademarks of Microchip Technology Incorporated in the U.S.A. and other countries.

AgileSwitch, APT, ClockWorks, The Embedded Control Solutions Company, EtherSynch, FlashTec, Hyper Speed Control, HyperLight Load, IntelliMOS, Libero, motorBench, mTouch, Powermite 3, Precision Edge, ProASIC, ProASIC Plus, ProASIC Plus logo, Quiet-Wire, SmartFusion, SyncWorld, Temux, TimeCesium, TimeHub, TimePictra, TimeProvider, WinPath, and ZL are registered trademarks of Microchip Technology Incorporated in the U.S.A.

Adjacent Key Suppression, AKS, Analog-for-the-Digital Age, Any Capacitor, AnyIn, AnyOut, Augmented Switching, BlueSky, BodyCom, CodeGuard, CryptoAuthentication, CryptoAutomotive, CryptoCompanion, CryptoController, dsPICDEM, dsPICDEM.net, Dynamic Average Matching, DAM, ECAN, Espresso T1S, EtherGREEN, IdealBridge, In-Circuit Serial Programming, ICSP, INICnet, Intelligent Paralleling, Inter-Chip Connectivity, JitterBlocker, maxCrypto, maxView, memBrain, Mindi, MiWi, MPASM, MPF, MPLAB Certified logo, MPLIB, MPLINK, MultiTRAK, NetDetach, Omniscient Code Generation, PICDEM, PICDEM.net, PICkit, PICtail, PowerSmart, PureSilicon, QMatrix, REAL ICE, Ripple Blocker, RTAX, RTG4, SAM-ICE, Serial Quad I/O, simpleMAP, SimpliPHY, SmartBuffer, SMART-I.S., storClad, SQI, SuperSwitcher, SuperSwitcher II, Switchtec, SynchroPHY, Total Endurance, TSHARC, USBCheck, VariSense, VectorBlox, VeriPHY, ViewSpan, WiperLock, XpressConnect, and ZENA are trademarks of Microchip Technology Incorporated in the U.S.A. and other countries.

SQTP is a service mark of Microchip Technology Incorporated in the U.S.A.

The Adaptec logo, Frequency on Demand, Silicon Storage Technology, and Symmcom are registered trademarks of Microchip Technology Inc. in other countries.

GestIC is a registered trademark of Microchip Technology Germany II GmbH & Co. KG, a subsidiary of Microchip Technology Inc., in other countries.

All other trademarks mentioned herein are property of their respective companies.

© 2016-2021, Microchip Technology Incorporated, All Rights Reserved.

ISBN: 978-1-5224-7728-0

Worldwide Sales and Service

AMERICAS

Corporate Office
2355 West Chandler Blvd.
Chandler, AZ 85224-6199
Tel: 480-792-7200
Fax: 480-792-7277
Technical Support:
http://www.microchip.com/support
Web Address:
www.microchip.com

Atlanta
Duluth, GA
Tel: 678-957-9614
Fax: 678-957-1455

Austin, TX
Tel: 512-257-3370

Boston
Westborough, MA
Tel: 774-760-0087
Fax: 774-760-0088

Chicago
Itasca, IL
Tel: 630-285-0071
Fax: 630-285-0075

Dallas
Addison, TX
Tel: 972-818-7423
Fax: 972-818-2924

Detroit
Novi, MI
Tel: 248-848-4000

Houston, TX
Tel: 281-894-5983

Indianapolis
Noblesville, IN
Tel: 317-773-8323
Fax: 317-773-5453
Tel: 317-536-2380

Los Angeles
Mission Viejo, CA
Tel: 949-462-9523
Fax: 949-462-9608
Tel: 951-273-7800

Raleigh, NC
Tel: 919-844-7510

New York, NY
Tel: 631-435-6000

San Jose, CA
Tel: 408-735-9110
Tel: 408-436-4270

Canada - Toronto
Tel: 905-695-1980
Fax: 905-695-2078

ASIA/PACIFIC

Australia - Sydney
Tel: 61-2-9868-6733

China - Beijing
Tel: 86-10-8569-7000

China - Chengdu
Tel: 86-28-8665-5511

China - Chongqing
Tel: 86-23-8980-9588

China - Dongguan
Tel: 86-769-8702-9880

China - Guangzhou
Tel: 86-20-8755-8029

China - Hangzhou
Tel: 86-571-8792-8115

China - Hong Kong SAR
Tel: 852-2943-5100

China - Nanjing
Tel: 86-25-8473-2460

China - Qingdao
Tel: 86-532-8502-7355

China - Shanghai
Tel: 86-21-3326-8000

China - Shenyang
Tel: 86-24-2334-2829

China - Shenzhen
Tel: 86-755-8864-2200

China - Suzhou
Tel: 86-186-6233-1526

China - Wuhan
Tel: 86-27-5980-5300

China - Xian
Tel: 86-29-8833-7252

China - Xiamen
Tel: 86-592-2388138

China - Zhuhai
Tel: 86-756-3210040

ASIA/PACIFIC

India - Bangalore
Tel: 91-80-3090-4444

India - New Delhi
Tel: 91-11-4160-8631

India - Pune
Tel: 91-20-4121-0141

Japan - Osaka
Tel: 81-6-6152-7160

Japan - Tokyo
Tel: 81-3-6880- 3770

Korea - Daegu
Tel: 82-53-744-4301

Korea - Seoul
Tel: 82-2-554-7200

Malaysia - Kuala Lumpur
Tel: 60-3-7651-7906

Malaysia - Penang
Tel: 60-4-227-8870

Philippines - Manila
Tel: 63-2-634-9065

Singapore
Tel: 65-6334-8870

Taiwan - Hsin Chu
Tel: 886-3-577-8366

Taiwan - Kaohsiung
Tel: 886-7-213-7830

Taiwan - Taipei
Tel: 886-2-2508-8600

Thailand - Bangkok
Tel: 66-2-694-1351

Vietnam - Ho Chi Minh
Tel: 84-28-5448-2100

EUROPE

Austria - Wels
Tel: 43-7242-2244-39
Fax: 43-7242-2244-393

Denmark - Copenhagen
Tel: 45-4485-5910
Fax: 45-4485-2829

Finland - Espoo
Tel: 358-9-4520-820

France - Paris
Tel: 33-1-69-53-63-20
Fax: 33-1-69-30-90-79

Germany - Garching
Tel: 49-8931-9700

Germany - Haan
Tel: 49-2129-3766400

Germany - Heilbronn
Tel: 49-7131-72400

Germany - Karlsruhe
Tel: 49-721-625370

Germany - Munich
Tel: 49-89-627-144-0
Fax: 49-89-627-144-44

Germany - Rosenheim
Tel: 49-8031-354-560

Israel - Ra'anana
Tel: 972-9-744-7705

Italy - Milan
Tel: 39-0331-742611
Fax: 39-0331-466781

Italy - Padova
Tel: 39-049-7625286

Netherlands - Drunen
Tel: 31-416-690399
Fax: 31-416-690340

Norway - Trondheim
Tel: 47-7288-4388

Poland - Warsaw
Tel: 48-22-3325737

Romania - Bucharest
Tel: 40-21-407-87-50

Spain - Madrid
Tel: 34-91-708-08-90
Fax: 34-91-708-08-91

Sweden - Gothenberg
Tel: 46-31-704-60-40

Sweden - Stockholm
Tel: 46-8-5090-4654

UK - Wokingham
Tel: 44-118-921-5800
Fax: 44-118-921-5820

© 2016-2021 Microchip Technology Inc.