RP8300 Series Pushbutton Switch



Applications / Markets

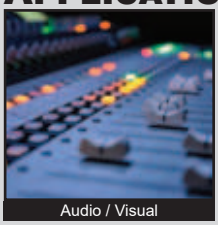
Audio / Visual

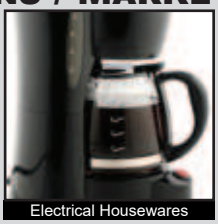
Electrical Housewares


Floor Care Appliances


White Goods


Instrumentation


Medical Equipment

RoHS

Specifications

Electrical Rating:
500mA @ 48 VAC, 200mA @ 50 VDC, 200mA @ 250 VAC
Life Expectancy: 500,000 Cycles
Contact Resistance: 50mΩ Max.
Insulation Resistance: 1,000MΩ Min. @ 500VDC
Dielectric Strength: 1,500VAC for 1 minute
Operating Temperature: -30°C to 85°C
Travel: 1.5mm
Contact Arrangement: SPST, Off-(On), Momentary
Actuation Force: 350 gf
Panel Thickness: 1.5mm - 4.0mm
Ingress Protection: IP67

Features & Benefits

- **Threaded mount**
- **500,000 life expectancy**
- **LED illumination options**
- **Sealed to IP67 ratings**
- **Metal Diecast housing**

Part Number Configurator

Series	Bushing	Termination	Contact Material	Seal	Housing Color	Cap Color	LED Color
RP8300 **RP8301***	**B2 -** Threaded (12 x 0.75)	**M1** - Standard	**C** - Gold Over Silver	**E** - Epoxy Sealed	**BLK** - Black* **NIC** - Stain Nickel **CHR** - Chrome	**WHT** - White **BLK** - Black **RED** - Red **ORG** - Orange **YEL** - Yellow **GRN** - Green **BLU** - Blue	**WHT** - White LED **RED** - Red LED **YEL** - Yellow LED **GRN** - Green LED **BLU** - Blue LED **GY** - Green/Yellow LED **RG** - Red/Green LED **RB** - Red/Blue LED **NIL** - Non Illuminated*

*The RP8201 series is only offered with a black housing color and is non-illuminated.

Specifications subject to change without notice 9.25.2019

RP8300 w/ LED
B2 Bushing

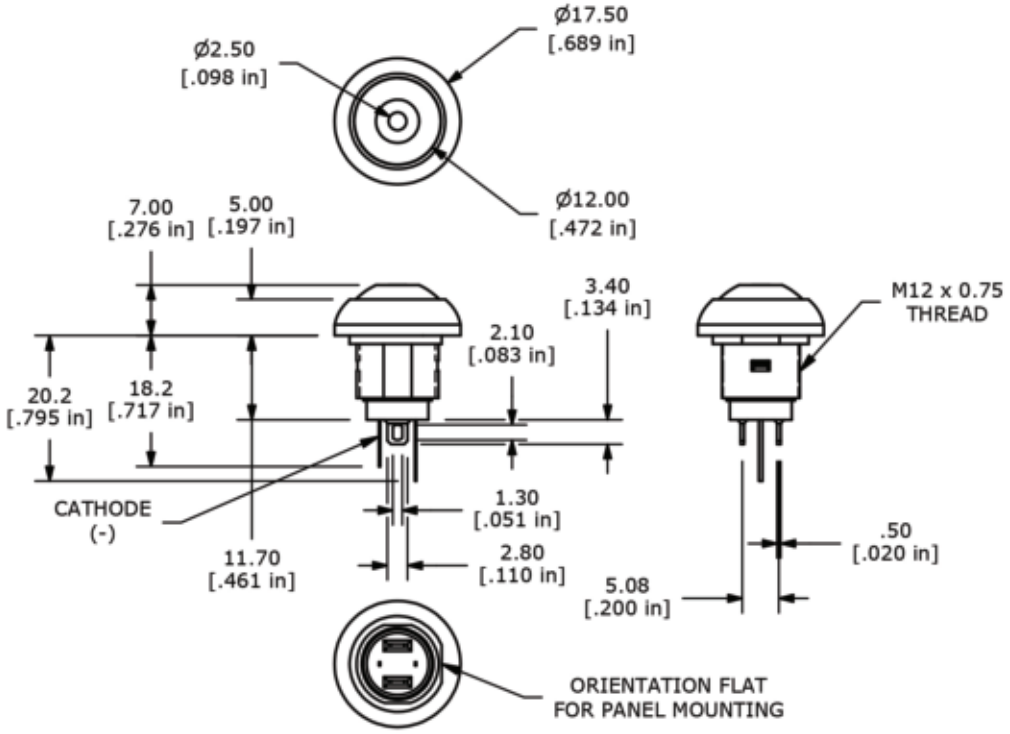

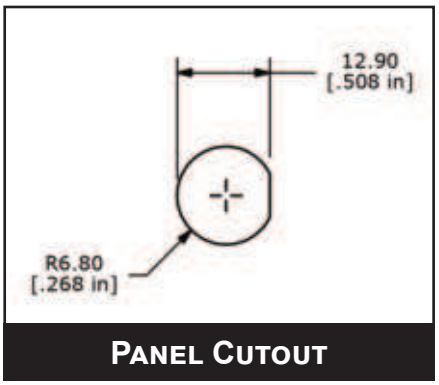

Panel Cutout

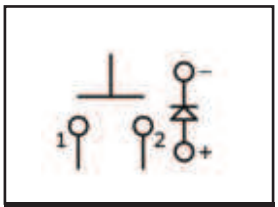

LED Schematic

RP8300 w/o LED
B2 Bushing

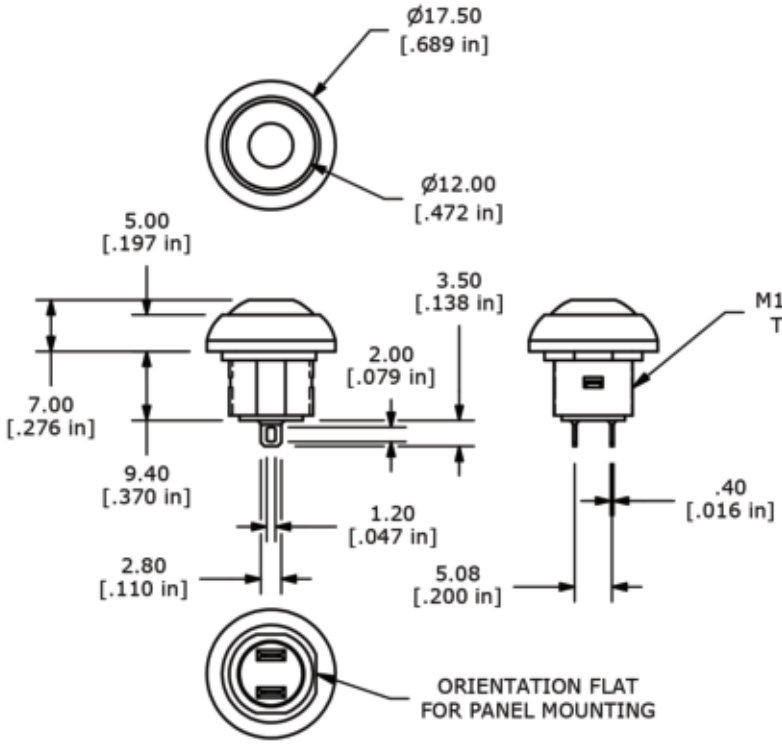

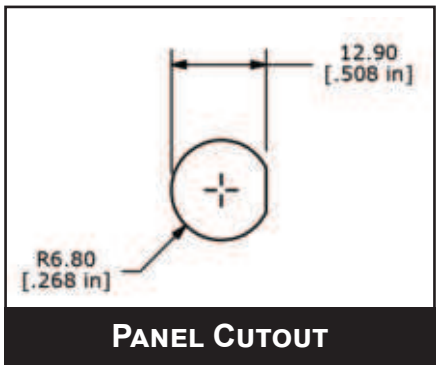

Panel Cutout



Schematic

RP8301 w/o LED
B2 Bushing

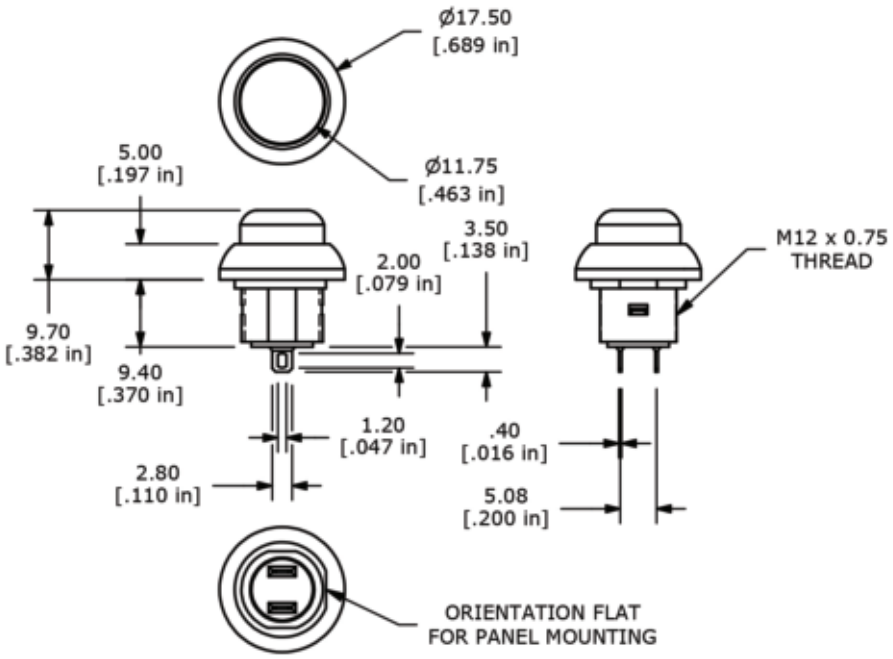

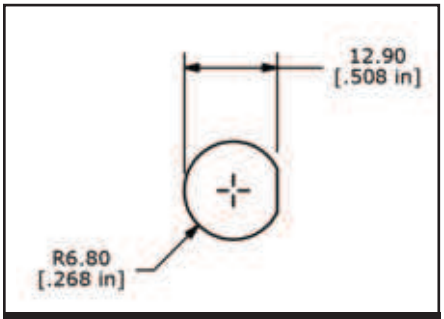

Panel Cutout

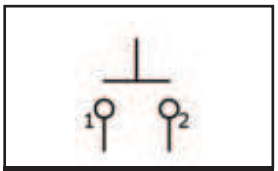

Schematic