NOT RECOMMENDED FOR NEW DESIGNS
NO RECOMMENDED REPLACEMENT
contact our Technical Support Center at
1-888-INTERSIL or www.intersil.com/tsc

HA-5330

650ns Precision Sample and Hold Amplifier

FN2858
Rev 5.00
June 2004

The HA-5330 is a very fast sample and hold amplifier designed primarily for use with high speed A/D converters. It utilizes the Intersil Dielectric Isolation process to achieve a 650ns acquisition time to 12-bit accuracy and a droop rate of 0.01µV/µs. The circuit consists of an input transconductance amplifier capable of producing large amounts of charging current, a low leakage analog switch, and an integrating output stage which includes a 90pF hold capacitor.

The analog switch operates into a virtual ground, so charge injection on the hold capacitor is constant and independent of V_{IN}. Charge injection is held to a low value by compensation circuits and, if necessary, the resulting 0.5mV hold step error can be adjusted to zero via the Offset Adjust terminals. Compensation is also used to minimize leakage currents which cause voltage droop in the Hold mode.

The HA-5330 will operate at reduced supply voltages (to ±10V) with a reduced signal range. The MIL-STD-883 data sheet for this device is available on request.

Ordering Information

PART NUMBER	TEMP. RANGE (^{o}C)	PACKAGE	PKG. DWG. #
HA1-5330-5	0 to 75	14 Ld CERDIP	F14.3

Pinout

HA-5330 (CERDIP)
TOP VIEW

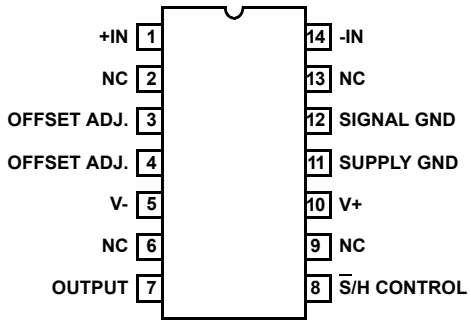

Features

- Very Fast Acquisition 500ns (0.1%) 650ns (0.01%)
- Low Droop Rate 0.01µV/µs
- Very Low Offset 0.2mV
- High Slew Rate 90V/µs
- Wide Supply Range . . . . . ±10V to ±20V
- Internal Hold Capacitor
- Fully Differential Input
- TTL/CMOS Compatible

Applications

- Precision Data Acquisition Systems
- D/A Converter Deglitching
- Auto-Zero Circuits
- Peak Detectors

Functional Diagram

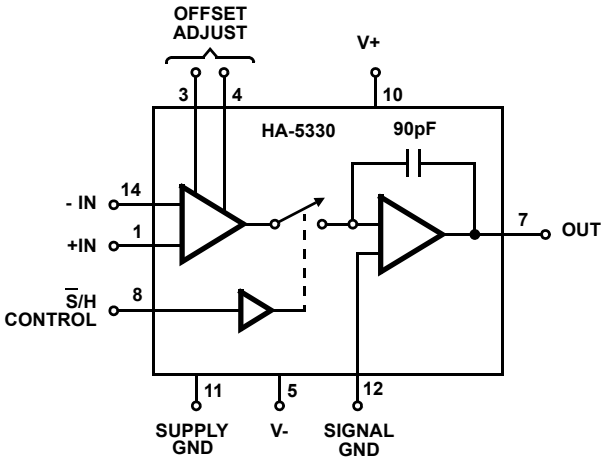

Absolute Maximum Ratings

Voltage between V+ and SUPPLY/SIG GND . . . . . .+20V
Voltage between V- and SUPPLY/SIG GND . . . . . -20V
Voltage between SUPPLY GND and SIG GND. . . . . ±2.0V
Voltage between $\overline{S}$/H Control and SUPPLY/SIG GND . . . +8V, -6V
Differential Input Voltage 24V
Output Current, Continuous (Note 1). . . . . ±17mA
Supply Voltage Range (Typical) . . . . . ±10V to ±20V

Thermal Information

Thermal Resistance (Typical, Note 3)	θ_{JA} (^{o}C/W)	θ_{JC} (^{o}C/W)
CERDIP Package.	66	16

Maximum Junction Temperature (Ceramic Package, Note 2). . . 175°C
Maximum Storage Temperature Range . . . . . -65°C to 150°C
Maximum Lead Temperature (Soldering 10s) . . . . . 300°C

Operating Conditions

Temperature Range. . . . . 0°C to 75°C

CAUTION: Stresses above those listed in "Absolute Maximum Ratings" may cause permanent damage to the device. This is a stress only rating and operation of the device at these or any other conditions above those indicated in the operational sections of this specification is not implied.

NOTES:

1. Internal Power Dissipation may limit Output Current below ±17mA.
2. Maximum power dissipation, including output load, must be designed to maintain the junction temperature below 175°C for the ceramic package.
3. θ_{JA} is measured with the component mounted on an evaluation PC board in free air.

Electrical Specifications

V_{SUPPLY} = ±15V; $\overline{S}$/H Control V_{IL} = +0.8V (Sample): V_{IH} = +2.0V (Hold); SIG GND = SUPPLY GND, Unity Gain Configuration (Output tied to -Input), Unless Otherwise Specified

PARAMETER	TEST CONDITIONS	TEMP (^{o}C)	MIN	TYP	MAX	UNITS
INPUT CHARACTERISTICS						
Input Voltage Range		Full	±10	-	-	V
Input Resistance (Note 4)		25	5	15	-	MΩ
Input Capacitance		25	-	3	-	pF
Offset Voltage		25	-	0.2	-	mV
		Full	-	-	1.5	mV
Offset Voltage Temperature Coefficient		Full	-	1	10	µV/^{o}C
Bias Current		25	-	±20	-	nA
		Full	-	-	±300	nA
Offset Current		25	-	20	-	nA
		Full	-	-	300	nA
Common Mode Range		Full	±10	-	-	V
CMRR	V_{CM} = ±10V	Full	86	100	-	dB
TRANSFER CHARACTERISTICS						
Gain	DC	Full	2×10^{6}	2×10^{7}	-	V/V
Gain Bandwidth Product	Note 12	25	-	4.5	-	MHz
OUTPUT CHARACTERISTICS						
Output Voltage		Full	±10	-	-	V
Output Current		Full	±10	-	-	mA
Full Power Bandwidth (Note 6)		25	-	1.4	-	MHz
Output Resistance	Hold Mode	25	-	0.2	-	Ω
	Sample Mode	25	-	10^{-5}	0.001	Ω
Total Output Noise, DC to 4MHz	Sample Mode		-	230	-	μV_{RMS}
	Hold Mode	25	-	190	-	μV_{RMS}
TRANSIENT RESPONSE						
Rise Time	Note 5	25	-	70	-	ns
Overshoot	Note 5	25	-	10	-	%

Electrical Specifications V_{SUPPLY} = ±15V; $\overline{S}$/H Control V_{IL} = +0.8V (Sample): V_{IH} = +2.0V (Hold); SIG GND = SUPPLY GND, Unity Gain Configuration (Output tied to -Input), Unless Otherwise Specified **(Continued)**

PARAMETER	TEST CONDITIONS	TEMP (^{O}C)	MIN	TYP	MAX	UNITS
Slew Rate	Note 7	25	-	90	-	V/µs
DIGITAL INPUT CHARACTERISTICS						
Input Voltage	V_{IH}	Full	2.0	-	-	V
	V_{IL}	Full	-	-	0.8	V
Input Current	V_{IL} = 0V	Full	-	10	40	µA
	V_{IH} = 5V	Full	-	10	40	µA
SAMPLE/HOLD CHARACTERISTICS						
Acquisition Time	To 0.1%, Note 8	25	-	500	-	ns
		Full	-	-	700	ns
	To 0.01%, Note 8	25	-	650	-	ns
		Full	-	-	900	ns
Aperture Time (Note 4)		25	-	20	-	ns
Effective Aperture Delay Time		25	-50	-25	0	ns
Aperture Uncertainty		25	-	0.1	-	ns
Droop Rate (Note 9)		25	-	0.01	-	µV/µs
		Full	-	-	10	µV/µs
Hold Step Error	Note 10	25	-	0.5	-	mV
Hold Mode Settling Time	To 0.01%	25	-	100	200	ns
Hold Mode Feedthrough	$20V_{P-P}$, 100kHz	Full	-	-88	-	dB
POWER SUPPLY CHARACTERISTICS						
Positive Supply Current		Full	-	18	24	mA
Negative Supply Current		Full	-	19	25	mA
Power Supply Rejection	Note 11	Full	86	100	-	dB

NOTES:

4. Derived from computer simulation only; not tested.
5. V_I = 200mV Step; R_L = 2kΩ; C_L = 50pF.
6. Full power bandwidth based on slew rate measurement using: $FPBW = \frac{\text{Slew Rate}}{2\pi V_{PEAK}}$. Distortion of wave shape occurs beyond 100kHz due to slew rate enhancement circuitry.
7. V_O = 20V Step; R_L = 2kΩ; C_L = 50pF.
8. V_O = 10V Step; R_L = 2kΩ; C_L = 50pF.
9. This parameter is measured at ambient temperature extremes in a high speed test environment. Consequently, steady state heating effects from internal power dissipation are not included.
10. V_{IN} = 0V; V_{IH} = +3.5V; t_R = 22ns (V_{IL} to V_{IH}). See graph.
11. Based on a 3V delta in each supply, i.e. 15V ±1.5V_{DC}.
12. V_{OUT} = 200mV_{P-P}, R_L = 2kΩ, C_L = 50pF.

Application Information

The HA-5330 has the uncommitted differential inputs of an op amp, allowing the Sample/Hold function to be combined with many conventional op amp circuit ideas. See the Intersil Application Note AN517 for a collection of circuit ideas.

Layout

A printed circuit board with ground plane is recommended for best performance. Bypass capacitors (0.01µF to 0.1µF, ceramic) should be provided from each power supply terminal to the Supply GND Terminal on pin 11.

Typical Applications

The HA-5330 is configured as a unity gain noninverting amplifier by simply connecting the output (pin 7) to the inverting input (pin 14). As an input device for a fast successive - approximation A/D converter, it offers an extremely high throughput rate. Also, the HA-5330's pedestal error is adjustable to zero by using an Offset Adjust potentiometer (10K to 50K) center tapped to V-.

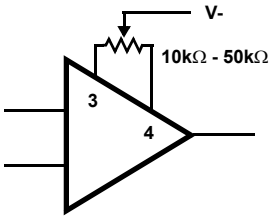

FIGURE 1. HA-5330 OFFSET ADJUST

The ideal ground connections are pin 11 (Supply Ground) directly to the system Supply Common, and pin 12 (Signal Ground) directly to the system Signal Ground (Analog Ground).

Hold Capacitor

The HA-5330 includes a 90pF MOS hold capacitor, sufficient for most high speed applications (the Electrical Specifications section is based on the internal capacitor).

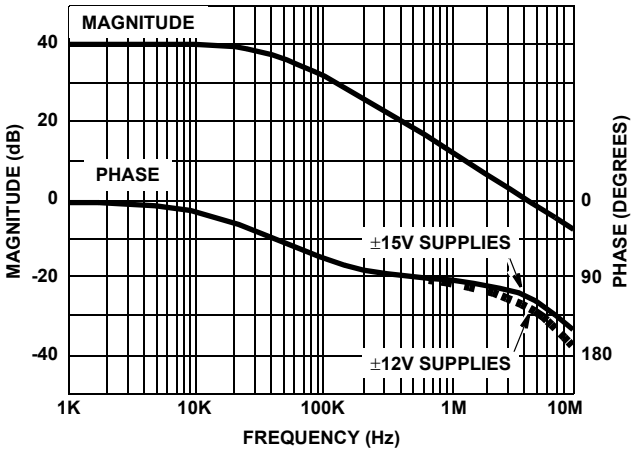

FIGURE 2. MAGNITUDE AND PHASE RESPONSE (CLOSED LOOP GAIN = 100)

Output Stage

The HA-5330 output circuit does not include short circuit protection, and consequently its output impedance remains low at high frequencies. Thus, the step changes in load current which occur during an A/D conversion are absorbed at the $\overline{S}$/H output with minimum voltage error. A momentary short circuit to ground is permissible, but the output is not designed to tolerate a short of indefinite duration.

Glossary of Terms

Acquisition Time

The time required following a "sample" command, for the output to reach its final value within ±0.1% or ±0.01%. This is the minimum sample time required to obtain a given accuracy, and includes switch delay time, slewing time and settling time.

Aperture Time

The time required for the sample-and-hold switch to open, independent of delays through the switch driver and input amplifier circuitry. The switch opening time is that interval between the conditions of 10% open and 90% open.

Hold Step Error

Hold step error is the output shift due to charge transfer from the sample to the hold mode. It is also referred to as "offset step" or "pedestal error".

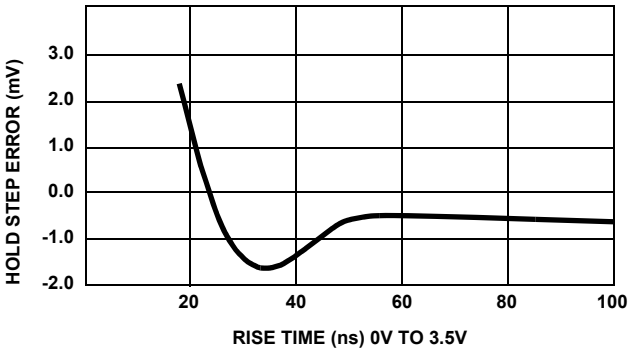

FIGURE 3. HOLD STEP ERROR vs $\overline{S}$/H CONTROL RISE TIME

Effective Aperture Delay Time (EADT)

The difference between the digital delay time from the Hold command to the opening of the $\overline{S}$/H switch, and the propagation time from the analog input to the switch.

EADT may be positive, negative or zero. If zero, the $\overline{S}$/H amplifier will output a voltage equal to V_{IN} at the instant the Hold command was received. For negative EADT, the output in Hold (exclusive of pedestal and droop errors) will correspond to a value of V_{IN} that occurred before the Hold command.

Aperture Uncertainty

The range of variation in Effective Aperture Delay Time. Aperture Uncertainty (also called Aperture Delay Uncertainty, Aperture Time Jitter, etc.) sets a limit on the accuracy with which a waveform can be reconstructed from sample data.

Die Characteristics

DIE DIMENSIONS:

99 mils x 166 mils x 19 mils
2510µm x 4210µm x 483µm

METALLIZATION:

Type: Al, 1% Cu
Thickness: 16kÅ ±2kÅ

PASSIVATION:

Type: Nitride (Si_3N_4) over Silox (SiO_2, 5% Phos.)
Silox Thickness: 12kÅ ±2kÅ
Nitride Thickness: 3.5kÅ ±1.5kÅ

SUBSTRATE POTENTIAL (POWERED UP):

Signal GND

TRANSISTOR COUNT:

205

PROCESS:

Bipolar Dielectric Isolation

Metallization Mask Layout

HA-5330

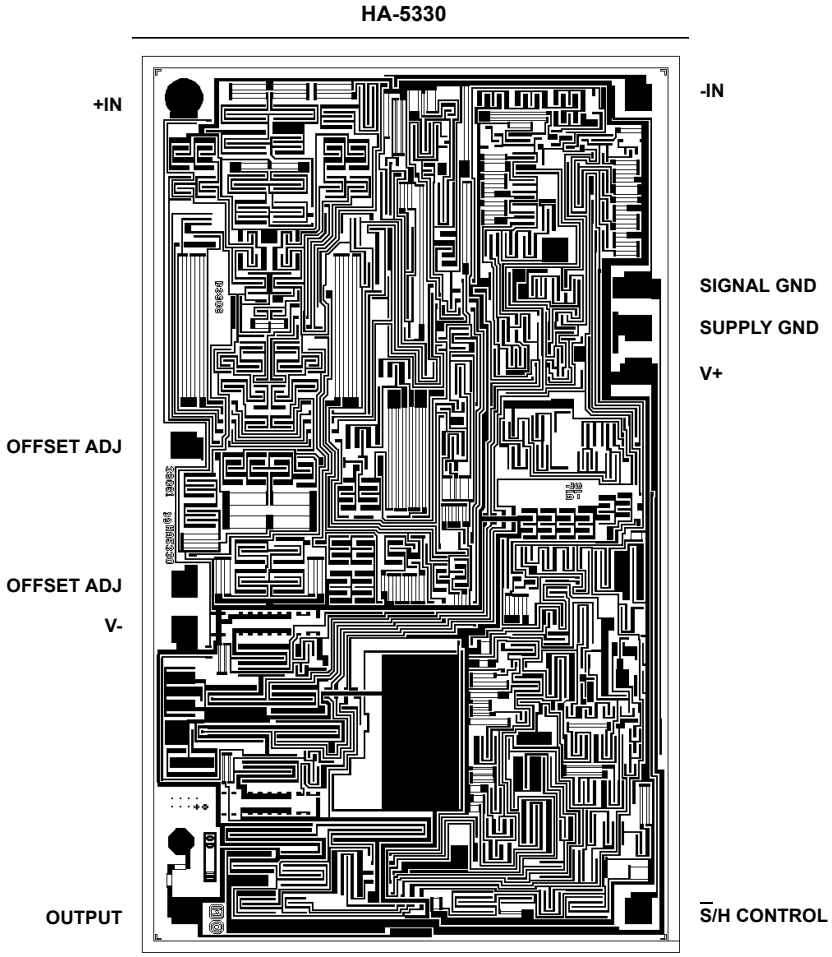

© Copyright Intersil Americas LLC 2003-2004. All Rights Reserved.
All trademarks and registered trademarks are the property of their respective owners.

For additional products, see www.intersil.com/en/products.html

Intersil products are manufactured, assembled and tested utilizing ISO9001 quality systems as noted in the quality certifications found at www.intersil.com/en/support/qualandreliability.html

Intersil products are sold by description only. Intersil may modify the circuit design and/or specifications of products at any time without notice, provided that such modification does not, in Intersil's sole judgment, affect the form, fit or function of the product. Accordingly, the reader is cautioned to verify that datasheets are current before placing orders. Information furnished by Intersil is believed to be accurate and reliable. However, no responsibility is assumed by Intersil or its subsidiaries for its use; nor for any infringements of patents or other rights of third parties which may result from its use. No license is granted by implication or otherwise under any patent or patent rights of Intersil or its subsidiaries.

For information regarding Intersil Corporation and its products, see www.intersil.com