G Series

1.5W CONVECTION COOLED

DC-HVDC CONVERTER



The G Series is a line of miniature high voltage converters that provide up to 6kV output, positive or negative, in a compact PCB mount package. The isolated output is directly proportional to the input, and is linear from approximately 0.7 volts in. Excellent filtering techniques and a low noise quasi-sinewave oscillator provide clean, reliable DC to HV DC conversion with low ripple and low EMI/RFI.

The isolated output allows for user selectable output polarity. When the optional center-tap pin is grounded, the unit provides both positive and negative outputs from one compact, low cost module. The pin pattern used on this model has become an industry standard for high voltage modules. The G Series units are component level converters that are easy to integrate, low cost, and come with decades of field proven reliability.

Features

- Output voltages from 100V to 6kV
- Output voltage proportional to input
- Low turn-on voltage 0.7VDC
- Input to output isolation
- Dual output models
- No minimum load
- 3 year warranty

Typical Applications

- Mass Spectrometry
- Electrostatic Chucks
- Electrophoresis
- Capacitor Charging
- Particle Counter
- Ignition/Spark
- Sustaining Ion Pumps

Dimensions

38.1 x 38.1 x 16.0mm (1.50" x 1.50" x 0.63")

Block Diagram

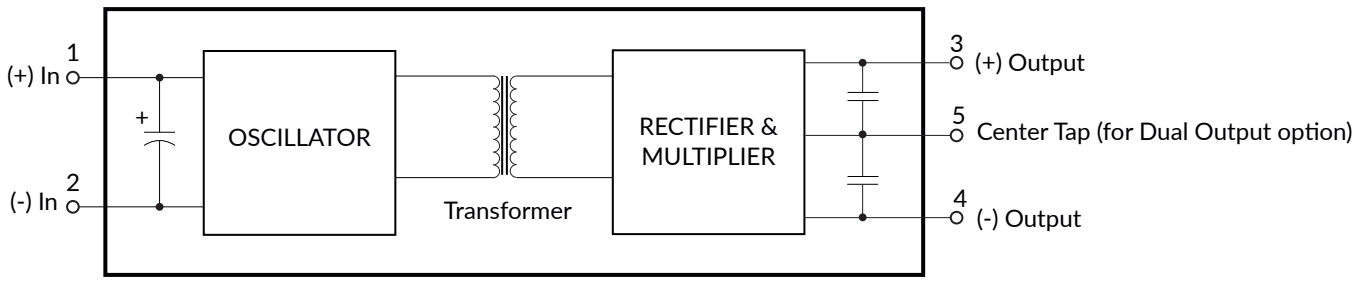

Input

Characteristic	Minimum	Typical	Maximum	Units	Notes & Conditions
Input Voltage	0.7		12	VDC	
Input Current, No Load			175	mA	See Models and Ratings Table.
Input Current, Full Load			400	mA	See Models and Ratings Table.

Output

Characteristic	Minimum	Typical	Maximum	Units	Notes & Conditions
Output Voltage			6000	VDC	See Models & Ratings table
Output Current			15	mA	See Models & Ratings table
Output Voltage Tolerance		±3		%	At Max Vout, Full Load
Minimum Load	No minimum load required				
Regulation	Unregulated, Output is proportional to Input. Unloaded output voltage is typically 10% higher than unloaded.				
Ripple and Noise	0.1		2.0	%	See Models & Ratings table
Response Time		15		msec	0 to Max Vout, Full Load [G01 to G60]

Environmental

Characteristic	Minimum	Typical	Maximum	Units	Notes & Conditions
Operating Temperature	-10		+60	°C	Case temperature
Storage Temperature	-25		+90	°C	
Cooling	Natural convection				
Humidity			95	%RH	Non-condensing

General

Characteristic	Minimum	Typical	Maximum	Units	Notes & Conditions
Isolation: Input to Output			3500	V	<±3500 Bias
Switching Frequency	60		190	kHz	Stable frequency over entire output voltage range
Construction	Case material is Diallyl Phthalate (DAP). UL 94 V-0 rated solid vacuum encapsulation				
Mean Time Between Failure	2.29			Mhrs	Bellcore TR 332

Notes:

1. Maximum rated output current is available at maximum rated output voltage and derates linearly as input voltage is decreased.
2. Output voltage is load dependent. Under light or no-load conditions, reduce the input voltage so maximum rated output voltage is not exceeded.
3. Specifications after 30 minute warm-up, full load, at 25°C unless otherwise indicated.
4. Proper thermal management techniques are required to maintain safe case temperature at maximum power output.
5. Ripple specification for center-tapped units applies to the voltage between the positive and negative output terminals.
6. Models G40, G50 & G60 do not have internal bleeder resistors on the output. Provisions must be made externally to discharge the output capacitors.

Safety Approvals

Safety Agency	Standard	Notes & Conditions
UL	IEC/UL/CSA/EN 62368	
CE	Meets all applicable directives	
RoHS	RoHS 2 and 3 Directive (2011/65/EU)	Where applicable

External EMI/RFI Shield

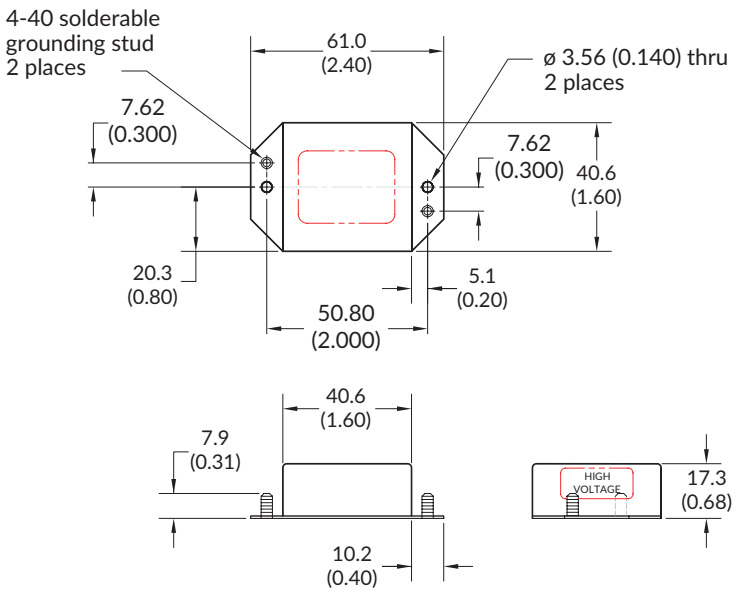

An AB suffix is used to indicate an added external EMI/RFI Shield as shown above. These five-sided aluminum enclosures feature a durable, non-conductive black anodized finish. On models with outputs of 3kV or higher, special care must be taken to ensure adequate spacing and insulation between the metal can and the high voltage output. Single sided layout, encapsulation, or conformal coating may be required. Case grounding studs must be connected to ground. Case ground is not connected to (-) Input.

Models & Ratings

Model Number	Output Voltage	Output Current[1]	input Current		Ripple
			No Load	Full Load	
G01	0 to 100V	15mA	<100mA	<250mA	<1.75%
G01CT	0 to +/-50V	15mA	<100mA	<250mA	<1.75%
G03	0 to 300V	5mA	<100mA	<250mA	<0.75%
G04	0 to 400V	3.75mA	<100mA	<250mA	<0.75%
G04CTR	0 to +/-200V	3.75mA	<100mA	<250mA	<0.75%
G05	0 to 500V	3mA	<100mA	<250mA	<0.1%
G06	0 to 600V	2.5mA	<100mA	<250mA	<0.1%
G10	0 to 1000V	1.5mA	<100mA	<250mA	<0.1%
G12	0 to 1200V	1.25mA	<150mA	<275mA	<0.1%
G12AB	0 to 1200V	1.25mA	<150mA	<275mA	<0.1%
G15AB	0 to 1500V	1mA	<125mA	<275mA	<0.5%
G20	0 to 2000V	0.75mA	<165mA	<275mA	<0.5%
G25	0 to 2500V	0.6mA	<125mA	<275mA	<1%
G25AB	0 to 2500V	0.6mA	<125mA	<275mA	<1%
G25CT	0 to +/-1250V	0.6mA	<125mA	<275mA	<1%
G30	0 to 3000V	0.5mA	<125mA	<300mA	<2%
G30AB	0 to 3000V	0.5mA	<125mA	<300mA	<2%
G30CT	0 to +/-1500V	0.5mA	<125mA	<300mA	<2%
G40	0 to 4000V	0.37mA	<125mA	<300mA	<1%
G40RAB	0 to 4000V	0.37mA	<125mA	<300mA	<1%
G50	0 to 5000V	0.3mA	<125mA	<300mA	<2%
G50CT	0 to +/-2500V	0.3mA	<125mA	<300mA	<2%
G60	0 to 6000V	0.25mA	<125mA	<300mA	<2%
G60RAB	0 to 6000V	0.25mA	<125mA	<300mA	<2%
G60CT	0 to +/-3000V	0.25mA	<125mA	<300mA	<2%
GPMT	0 to 1250V	0.35mA	<35mA	<75mA	<0.05%

Notes:

1. All orderable part numbers are listed above.
2. CT indicates dual output, center tap. Negative side will be ~10% larger than positive side w.r.t. the center tap pin.
3. AB suffix indicates external shield, see Mechanicals.
4. R suffix is used as a RoHS indicator for legacy models.
5. Model GPMT is rated for 0.4375 Watts.

Mechanical Details

G01 to G40
G01CT to G12CT

Top View

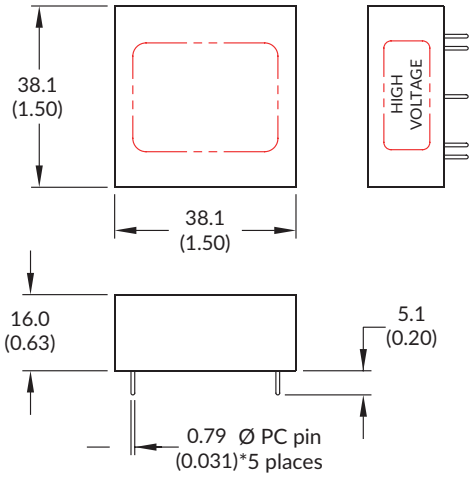

PCB Layout

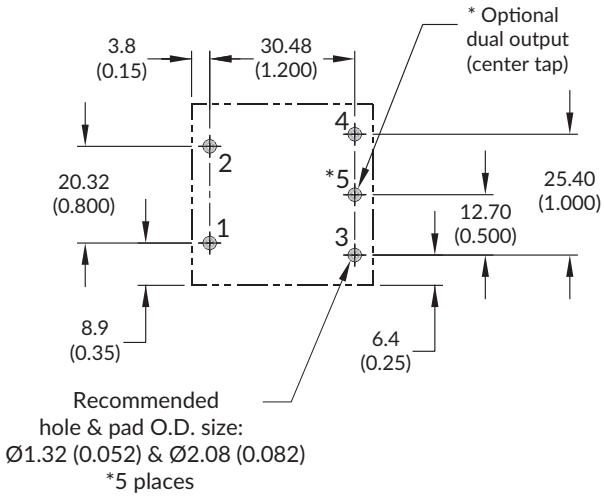

G50 to G60
G25CT to G60CT

Top View

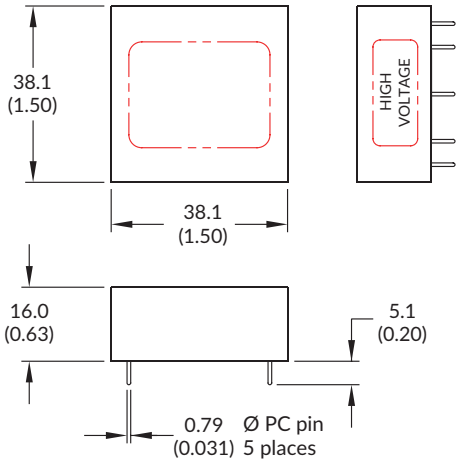

PCB Layout

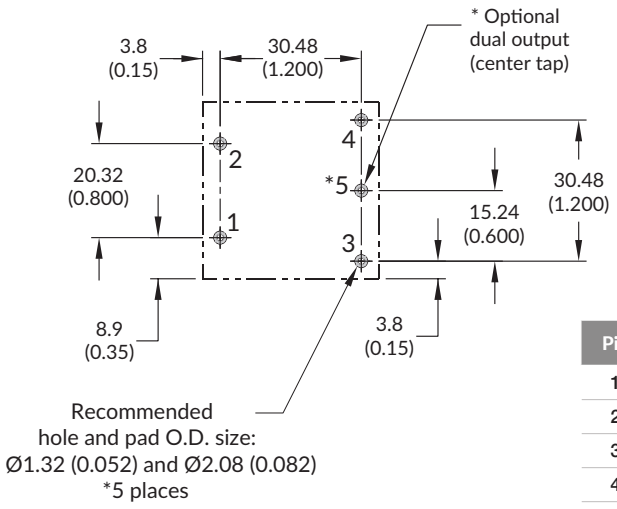

Pin	Function
1	(+) Input
2	(-) Input
3	(+) Output
4	(-) Output
5	Dual Output/Center Tap (Optional)

Notes:

1. All dimensions are in mm (inches)
2. Weight 43g (1.5oz)
3. Tolerance: X.XX±0.51 (0.02)
4. Pin Tolerance: ±0.127 (0.005)

Application Notes

Positive Output

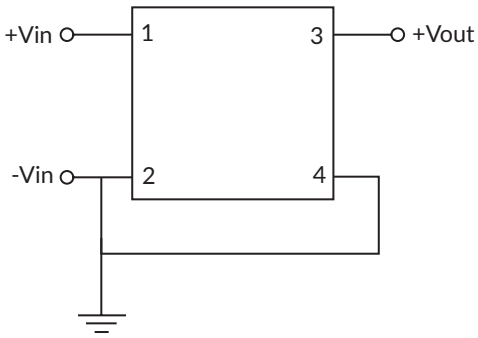

Negative Output

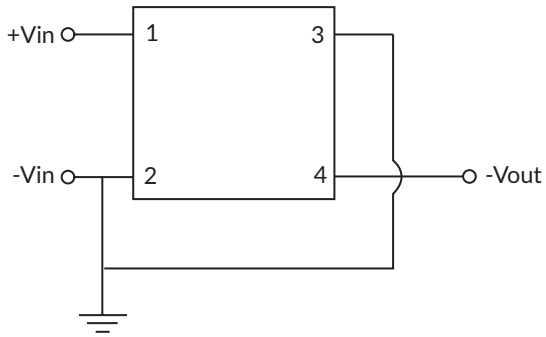

Dual Output

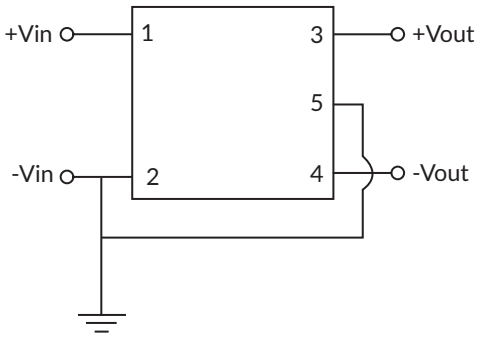

Typical Output vs. Input Voltage

