VES255 Series

AC-DC Power Supplies

XP Power

255 Watts

- Energy Efficiency Level VI
- High Power Density
- Single Outputs from 19V to 48V
- <0.5 W Standby Power
- China Compulsory Certification (CCC) Qualified
- -10 °C to 60 °C Operation
- Low Cost



GREEN XP POWER

Dimensions:

VES225:
7.77 x 3.5 x 1.53" (197.4 x 88.9 x 39.0 mm)

Models & Ratings

Output Power	Output Voltage	Output Current	Total Regulation	Efficiency[1]	Model Number
255W	19.0 V	13.42 A	±5%	92%	VES255PS19
	24.0 V	10.63 A		91%	VES255PS24
	48.0 V	5.31 A		91%	VES255PS48

Notes

1. Typical average of efficiencies measured at 25%, 50%, 75% and 100% load and 230 VAC input.

Mechanical Details

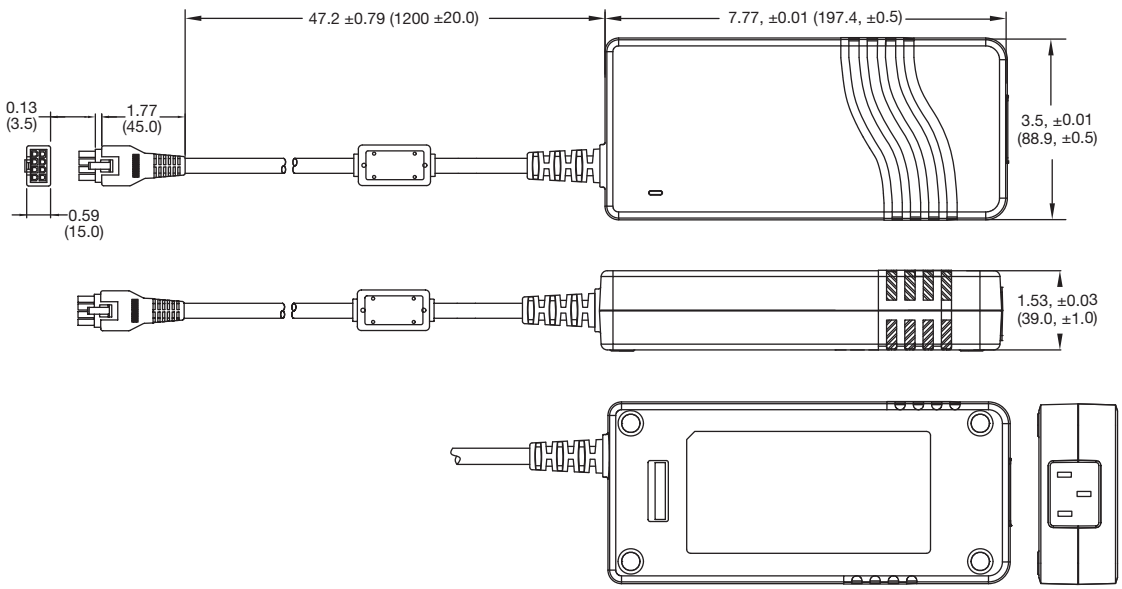

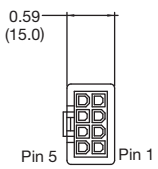

Pin	Function
1	Return
2	
3	
4	
5	Output+
6	
7	
8	

Notes

1. All dimensions shown in inches (mm). Tolerance is 0.02 (0.5) maximum, except output cable length.
2. Output connector: molex Mini Fit JR, 8 way, mates with molex series #5569 plugs.
3. Weight: 2.25lbs (1020g) approx.
4. Output lead guage is 16 AWG.
5. For European mains lead, order part EU-MAINS-IEC,
   For UK mains lead order part UK-MAINS-IEC,
   For US mains lead order part US-MAINS-IEC

Input

Characteristic	Minimum	Typical	Maximum	Units	Notes & Conditions
Input Voltage	90		264	VAC	Derate linearly from 100% load at 100 VAC to 86% load at 90 VAC
Input Frequency	47		63	Hz	
Input Current		2.5/1.3		A	Measured at 115/230 VAC
Inrush Current			120	A	230 VAC, cold start at 25 °C
Power Factor					EN61000-3-2 Class A
Earth Leakage Current			1	mA	264 VAC, 60 Hz
No Load Input Power		0.2	0.4	W	
Input Protection	T4.0A/250 VAC internal fuse in line				

Output

Characteristic	Min.	Typ.	Max.	Units	Notes & Conditions
Output Voltage	19		48	VDC	See Models and Ratings table
Initial Set Accuracy			±2	%	At 50% load
Minimum Load					No minimum load required
Start Up Delay			3	s	
Start Up Rise Time			70	ms	
Hold Up Time	10			ms	Full load and 115 VAC
Line Regulation			±0.5	%	
Total Regulation			±5	%	
Transient Response			5	%	Maximum deviation, recovering to less than 1% within 500 µs for 50% to 100% step load change
Ripple and Noise			260/350	mV pk-pk	19-24V / 48V. Measured with 20 MHz Bandwidth and 10 µF electrolytic in parallel with 0.1 µF ceramic capacitor.
Overshoot			10	%	At turn on / turn off
Overload Protection	110		160	%	
Overvoltage Protection			180	%	Recycle mains to reset
Short Circuit Protection	Trip and restart (hiccup), auto resetting				
Temperature Coefficient		0.04		%/°C	

Environmental

Characteristic	Minimum	Typical	Maximum	Units	Notes & Conditions
Operating Temperature	-10		+60	°C	Derate from 100% load at 40 °C to 50% load at 60 °C
Cooling	Natural convection				
Operating Humidity	10		90	%RH	Non-condensing
Storage Temperature	-20		+95	°C	
Operating Altitude			5000	m	
Shock	IEC68-2-27, 30 g, 30 ms half sine, 3 times in each of 6 axes				
Vibration	IEC68-2-6, 10-300 Hz, 2 g 15 mins/sweep, 60 mins for each of 3 axes, non operating				

Derating Curve

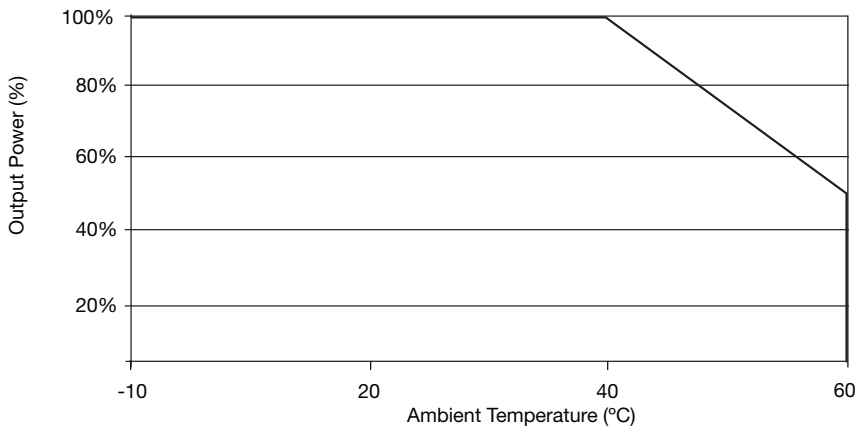

General

Characteristic	Minimum	Typical	Maximum	Units	Notes & Conditions
Efficiency		91		%	See Models and Ratings table and curves DoE Level VI, CoC Tier 2, MEPS
Isolation: Input to Output	3000			VAC	
Input to Ground	1500			VAC	
Output to Ground				VDC	Output return is connected to input ground
Switching Frequency	25		70	kHz	Variable. Main converter
		78			Variable. PFC stage
Power Density		6		W/in^3	
Mean Time Between Failure	100			kHrs	MIL-HDBK-217F at 25 °C GB
Weight		2.25 (1020)		lb (g)	

Efficiency Curves

VES255PS19

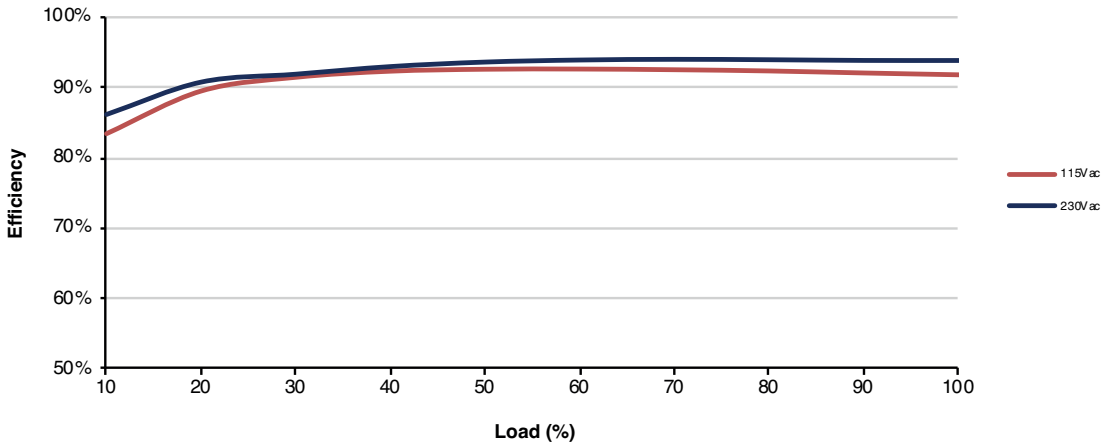

VES255PS24

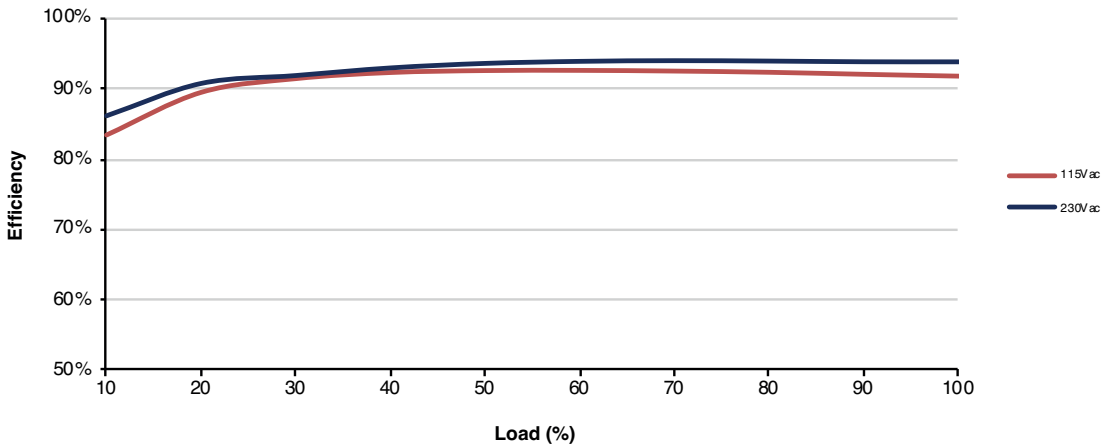

EMC: Emissions

Phenomenon	Standard	Test Level	Notes & Conditions
Emissions	EN55032	Class B	Conducted & Radiated
	FCC Part 15		
Harmonic Current	EN61000-3-2	Class A	
Voltage Flicker	EN61000-3-3		

EMC: Immunity

Phenomenon	Standard	Test Level	Criteria	Notes & Conditions
ESD	EN61000-4-2	±8 kV Air, ±6 kV contact	A	
Radiated	EN61000-4-3	3 V/m	A	
EFT/Burst	EN61000-4-4	2kV	A	
Surge	EN61000-4-5	Installation Class 3	A	
Conducted	EN61000-4-6	3 V	A	
Magnetic Fields	EN61000-4-8	3 A/m	A	
Dips and Interruptions	EN61000-4-11	Dip: 30% 500 ms	A/B	High Line/Low Line
		Dip: 100% 5000 ms	B	
		Int: 100% 10 ms	A	

Safety Approvals

Safety Agency	Safety Standard	Notes & Conditions
UL	UL62368-1	Approved for 0-40°C ambient.
TUV	EN62368-1	
CB	IEC62368-1	
CCC	China Compulsory Certification, GB4943	
AU/NZ	AU/NZ 62368-1	
CE	Meets all applicable directives	
UKCA	Meets all applicable legislation	

Mechanical Details

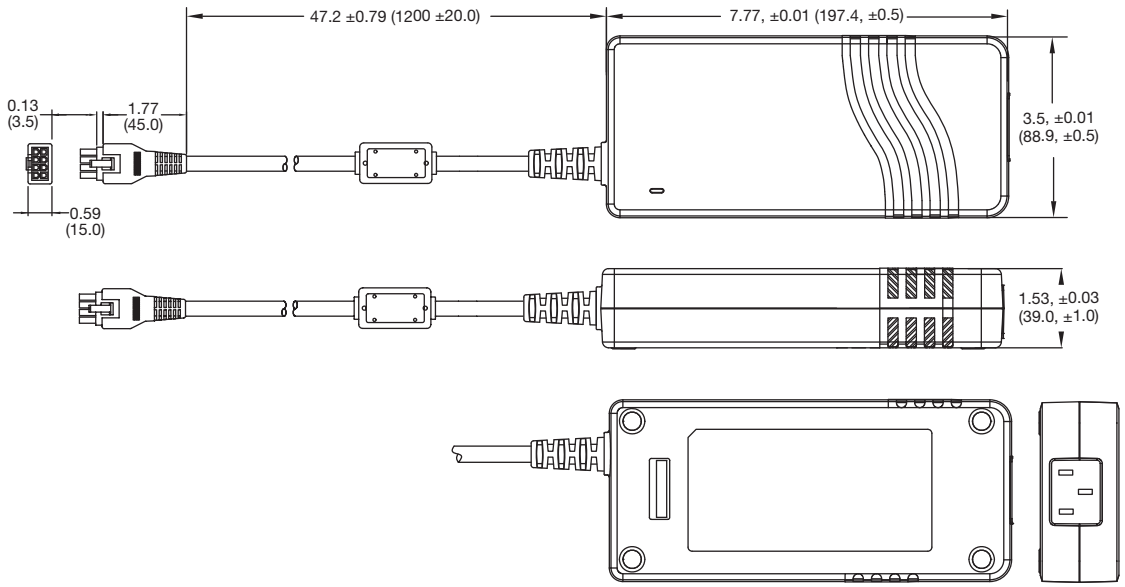

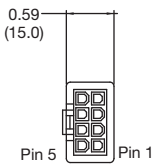

Pin	Function
1	Return
2	
3	
4	
5	Output+
6	
7	
8	

Notes

1. All dimensions shown in inches (mm). Tolerance is 0.02 (0.5) maximum, except output cable length.
2. Output connector: molex Mini Fit JR, 8 way, mates with molex series #5569 plugs.
3. Weight: 2.25lbs (1020g) approx.
4. Output lead guage is 16 AWG.
5. For European mains lead, order part EU-MAINS-IEC,
   For UK mains lead order part UK-MAINS-IEC,
   For US mains lead order par US-MAINS-IEC