SURFACE MOUNT LED BLUE, 1206 PACKAGE

BIVAR

SM1206BWC

- **Industry Standard 1206 Package**
- **RoHS Compliant**
- **Small Package and Footprint**
- **Water Clear Lens**
- **Wide Viewing Angle**
- **Ideal for Status Indication, Display, and Backlighting**

Bivar Surface Mount 1206 package LED may be used in nearly any lighting or indication application. The miniature package is ideal for small scale applications such as general indication and backlighting. Low power consumption and excellent long life reliability are suitable for battery powered equipment. Bivar offers water clear LED lens for maximum luminous intensity. Wide variety of wavelength and intensity combinations are available to meet any illumination need. The SM1206 LED is packaged in standard tape and reels for pick and place assemblies.

Part Number	Material	Emitted Color	Peak Wavelength λp(nm) TYP.	Lens Appearance	Luminous Intensity (mcd) TYP.	Viewing Angle
SM1206BWC	InGaN	BLUE	428	Water Clear	9	140°

Outline Dimensions

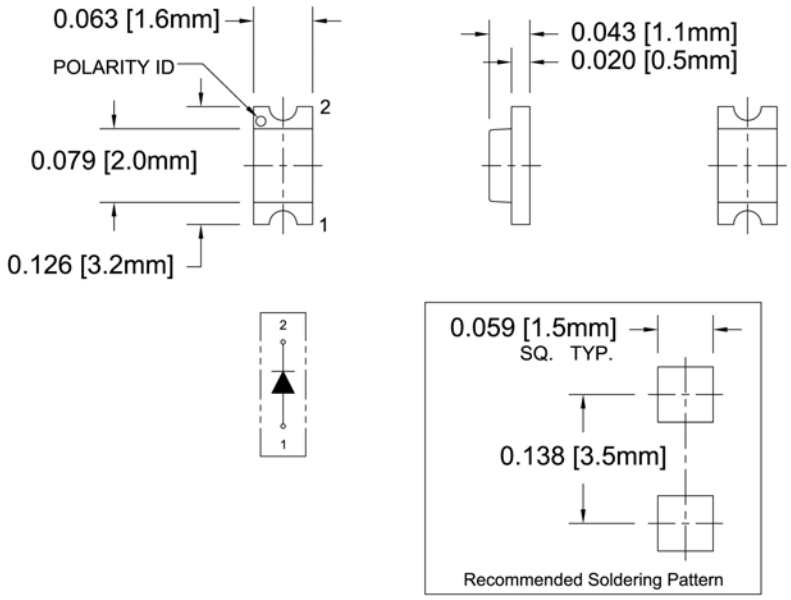

Outline Drawings Notes:
1. All dimensions are in inches [millimeters].
2. Standard tolerance: ±0.010" unless otherwise noted.

ATTENTION OBSERVE PRECAUTIONS FOR HANDLING ELECTROSTATIC SENSITIVE DEVICES

RoHS Compliant

Moisture Sensitivity Level 4

Bivar reserves the right to make changes at any time without notice.

Absolute Maximum Ratings

T_A = 25°C unless otherwise noted

Power Dissipation	100 mW
Forward Current (DC)	30 mA
Peak Forward Current [1]	100 mA
Reverse Voltage	5 V
Operating Temperature Range	-30 ~ +80°C
Storage Temperature Range	-40 ~ +85°C
Lead Soldering Temperature (3 mm from the base of the epoxy bulb) [2]	260°C

Notes: 1. 10% Duty Cycle, Pulse Width ≤ 0.1 msec. 2. Solder time less than 5 seconds at temperature extreme.

Electrical / Optical Characteristics

T_A = 25°C & I_F = 20 mA unless otherwise noted

Part Number	Forward Voltage (V)[1]			Recommend Forward Current (mA)			Reverse Current (μA)	Dominant Wavelength (nm)[2]			Luminous Intensity Iv (mcd)			Viewing Angle 2 Θ ½ (deg)
	MIN	TYP	MAX	MIN	TYP	MAX	MAX	MIN	TYP	MAX	MIN	TYP	MAX	TYP
SM1206BWC	/	3.9	4.5	/	20	/	10	/	466	/	6	9	/	140

Notes: 1. Tolerance of forward voltage : ±0.05V. 2. Tolerance of dominant wavelength : ±1.0nm.

Bivar, Inc. — 4 Thomas, Irvine, California 92618, U.S.A.
Phone: (949) 951-8808 Fax: (949) 951-3974 E-mail: bivar@bivar.com Web: www.bivar.com

Typical Electrical / Optical Characteristics

T_A = 25°C unless otherwise noted

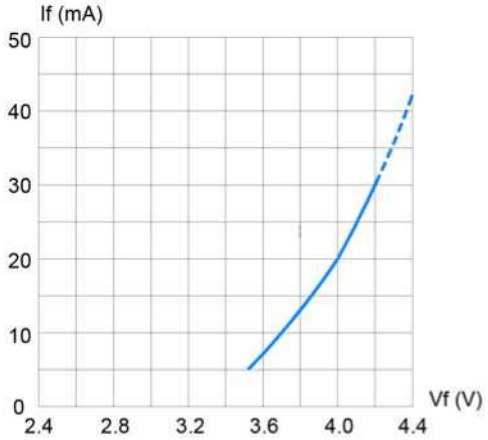

Fig. 1 Forward Current vs. Forward Voltage

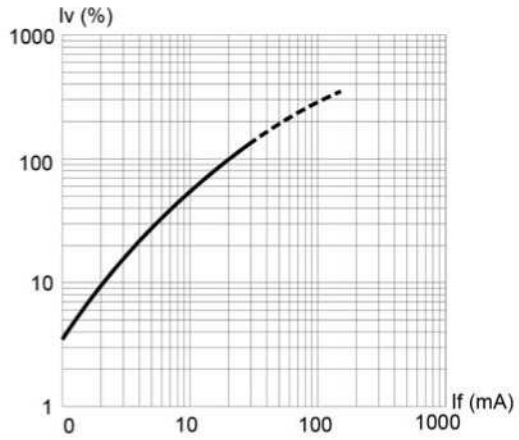

Fig. 2 Relative Luminous Intensity vs. Forward Current

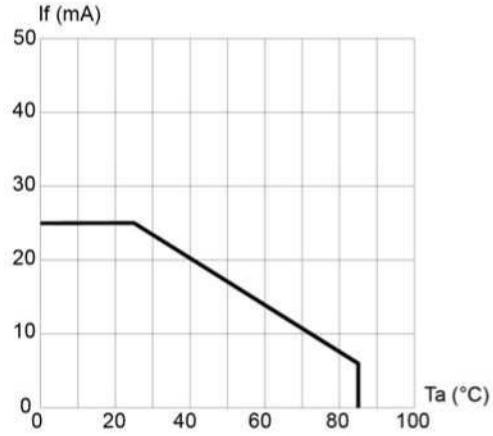

Fig. 3 Forward Current vs. Temperature

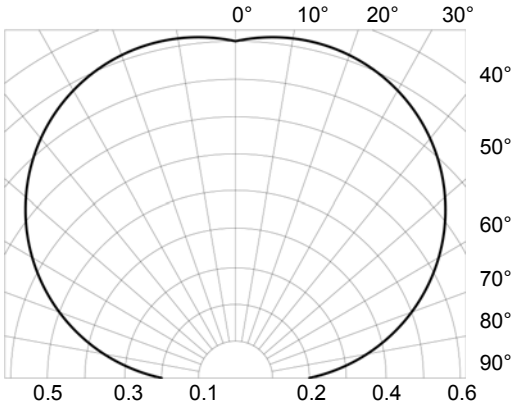

Fig. 4 Directivity Radiation Diagram

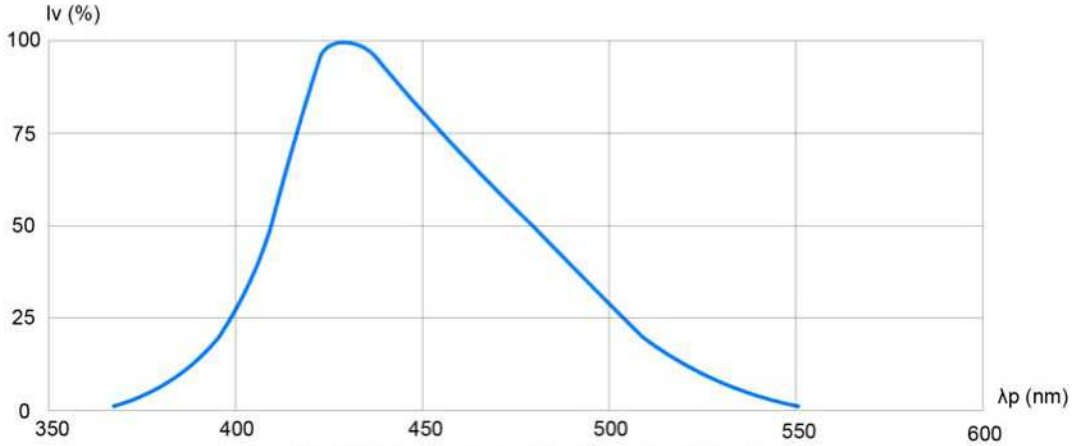

Fig. 5 Relative Luminous Intensity vs. Peak Wavelength

Recommended Soldering Conditions

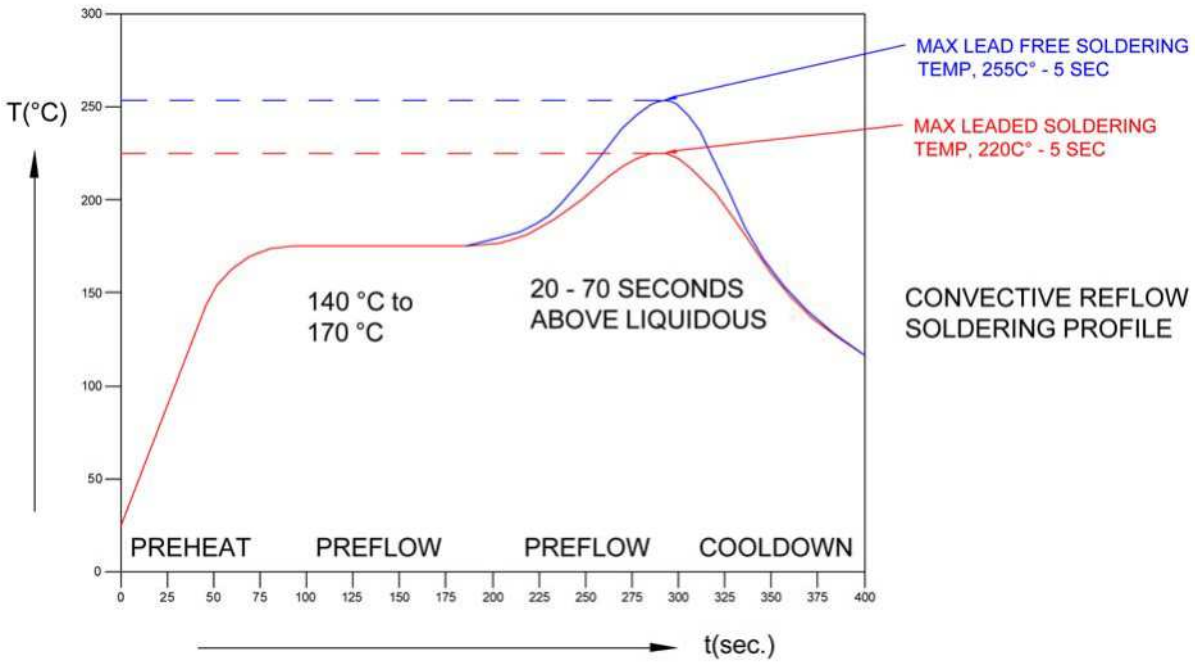

Tape and Reel Dimensions

Note: 3000 pcs/Reel

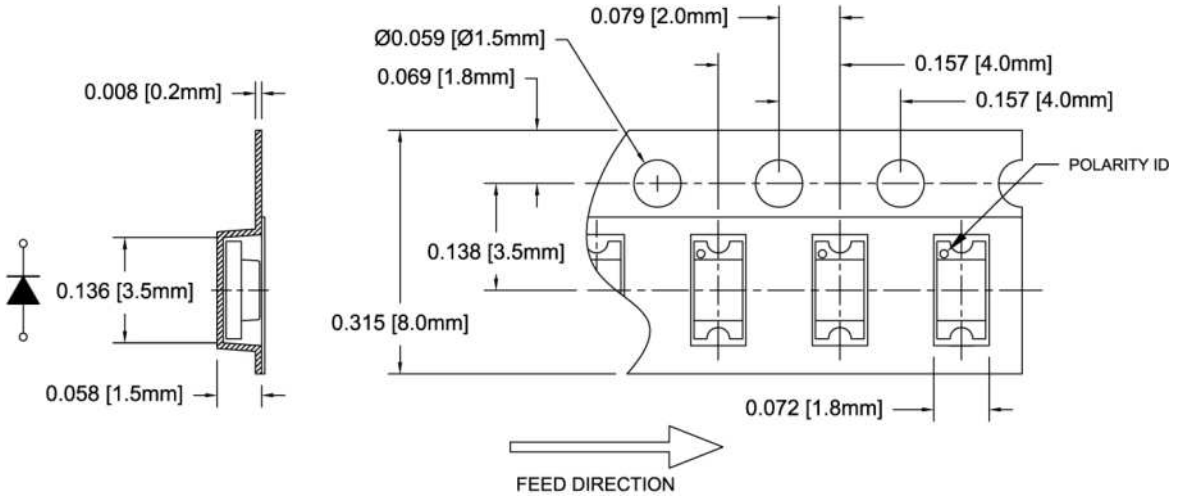

Outline Drawings Notes:
1. All dimensions are in inches [millimeters].
2. Standard tolerance: ±0.010" unless otherwise noted.

Bivar reserves the right to make changes at any time without notice.

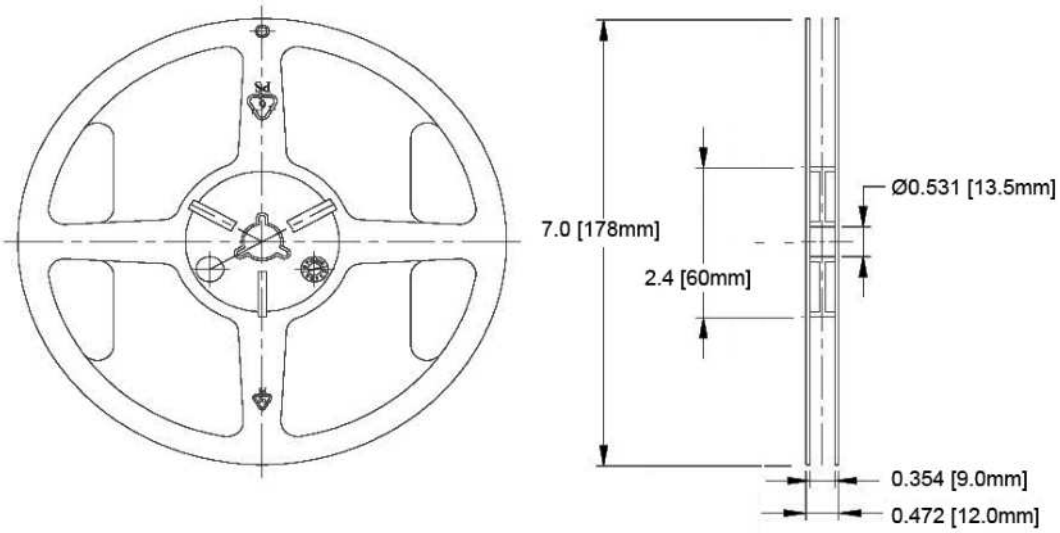

Outline Drawings Notes:
1. All dimensions are in inches [millimeters].
2. Standard tolerance unless otherwise noted: X.XXX ± 0.010"
   X.X ± 0.1"

Packaging and Labeling Plan

Note: 1 Reel / Bag

Vacuum and Heat Sealed
Clear AntiStatic Poly Bag

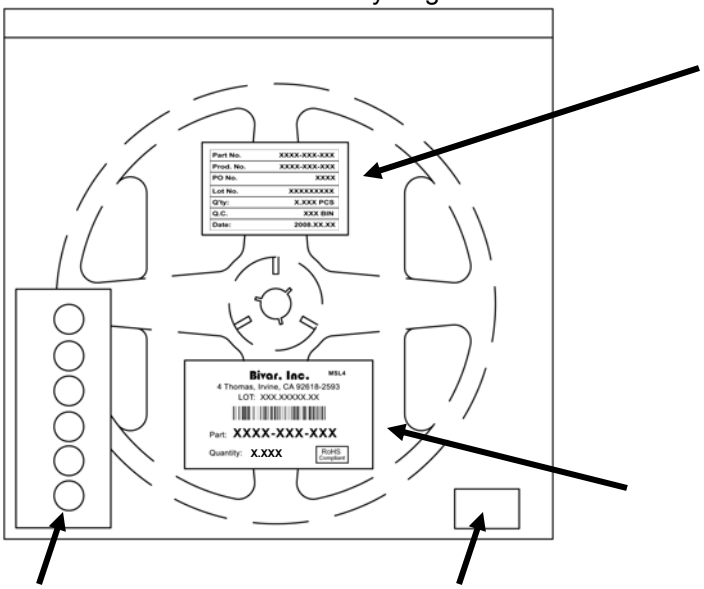

Humidity Indicator Card

Desiccant

Part No.	XXXX-XXX-XXX
Prod. No.	XXXX-XXX-XXX
PO No.	XXXX
Lot No.	XXXXXXXXX
Q'ty:	X.XXX PCS
Q.C.	XXX BIN
Date:	2008.XX.XX

Internal Quality Control

Bivar Standard Packaging Label