# SURFACE MOUNT LED GREEN, 1206 IL PACKAGE

BIVAR

**SM1206SGC-IL**

- **Industry Standard 1206 Package**
- **RoHS Compliant**
- **Water Clear Inner Lens**
- **High Luminous Intensity**
- **Narrow Viewing Angle**
- **Ideal for Status Indication, Display, and Backlighting**

Bivar Surface Mount 1206 Inner Lens package LED may be used in nearly any lighting or indication application. The water clear inner lens provides a narrow viewing angle and high luminous intensity making it suitable for small scale applications such as display, backlighting, and general indication. Low power consumption and excellent long life reliability are ideal for battery powered equipment. Wide variety of wavelength and intensity combinations are available to meet any illumination need. The SM1206-IL LED is packaged in standard tape and reels for pick and place assemblies.

| Part Number | Material | Emitted Color | Peak Wavelength λp(nm) TYP. | Lens Appearance | Luminous Intensity (mcd) TYP. | Viewing Angle |
|---|---|---|---|---|---|---|
| SM1206SGC-IL | AlGaInP | GREEN | 568 | Water Clear | 80 | 30° |

## Outline Dimensions

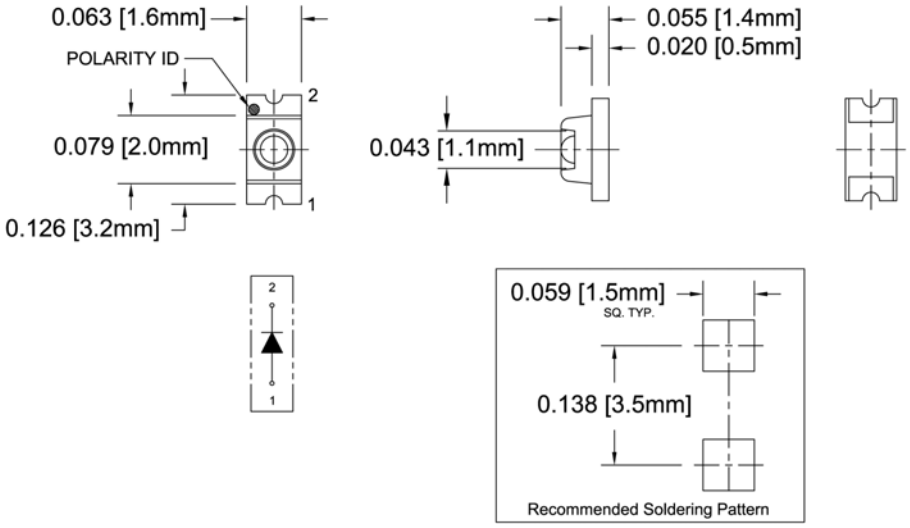


**Outline Drawings Notes:**
1. All dimensions are in inches [millimeters].
2. Standard tolerance: ±0.010" unless otherwise noted.

ATTENTION OBSERVE PRECAUTIONS FOR HANDLING ELECTROSTATIC SENSITIVE DEVICES

RoHS Compliant

Moisture Sensitivity Level 4

Bivar reserves the right to make changes at any time without notice.

## Absolute Maximum Ratings

$T_A$ = 25°C unless otherwise noted

| | |
|---|---|
| Power Dissipation | 78 mW |
| Forward Current ( DC ) | 30 mA |
| Peak Forward Current [1] | 100 mA |
| Reverse Voltage | 5 V |
| Operating Temperature Range | -30 ~ +80°C |
| Storage Temperature Range | -40 ~ +85°C |
| Lead Soldering Temperature ( 3 mm from the base of the epoxy bulb ) [2] | 260°C |

Notes: 1. 10% Duty Cycle, Pulse Width ≤ 0.1 msec. 2. Solder time less than 5 seconds at temperature extreme.

## Electrical / Optical Characteristics

$T_A$ = 25°C & $I_F$ = 20 mA unless otherwise noted

| Part Number | Forward Voltage (V)[1] | | | Recommend Forward Current (mA) | | | Reverse Current (μA) | Dominant Wavelength (nm)[2] | | | Luminous Intensity Iv (mcd) | | | Viewing Angle 2 Θ ½ (deg) |
|---|---|---|---|---|---|---|---|---|---|---|---|---|---|---|
| | MIN | TYP | MAX | MIN | TYP | MAX | MAX | MIN | TYP | MAX | MIN | TYP | MAX | TYP |
| SM1206SGC-IL | / | 2.1 | 2.6 | / | 20 | / | 10 | / | 565 | / | 45 | 80 | / | 30 |

Notes: 1. Tolerance of forward voltage : ±0.05V. 2. Tolerance of dominant wavelength : ±1.0nm.



Bivar, Inc. — 4 Thomas, Irvine, California 92618, U.S.A.
Phone: (949) 951-8808 Fax: (949) 951-3974 E-mail: bivar@bivar.com Web: www.bivar.com

# Typical Electrical / Optical Characteristics

$T_A$ = 25°C unless otherwise noted

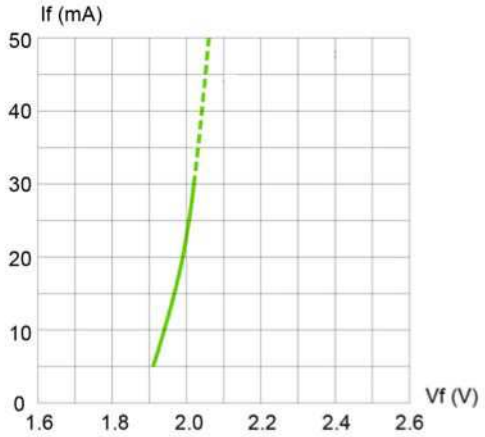


Fig. 1 Forward Current vs. Forward Voltage

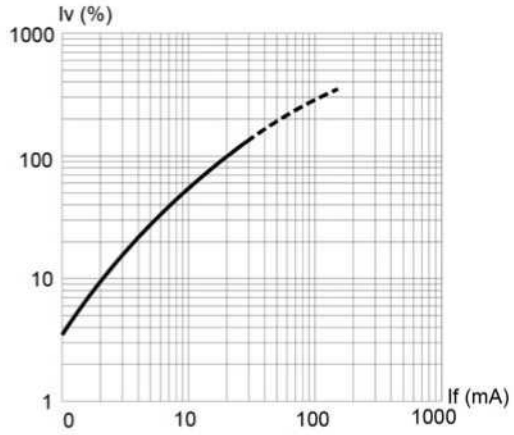


Fig. 2 Relative Luminous Intensity vs. Forward Current

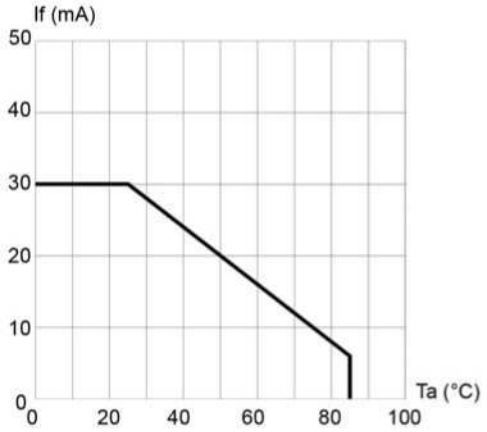


Fig. 3 Forward Current vs. Temperature

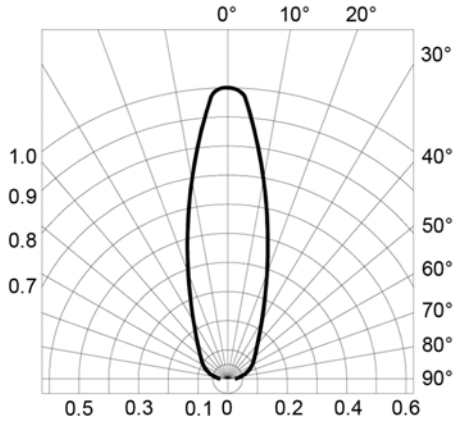


Fig. 4 Directivity Radiation Diagram

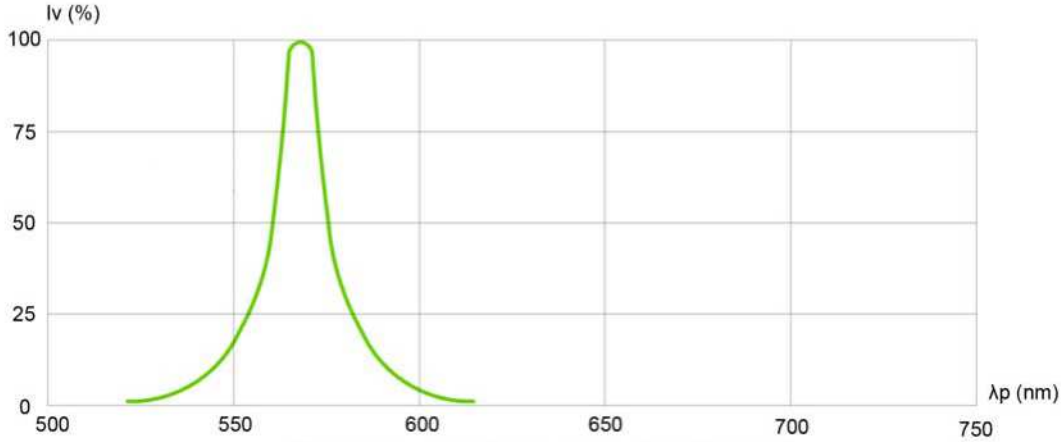


Fig. 5 Relative Luminous Intensity vs. Peak Wavelength

Bivar reserves the right to make changes at any time without notice.

## Recommended Soldering Conditions

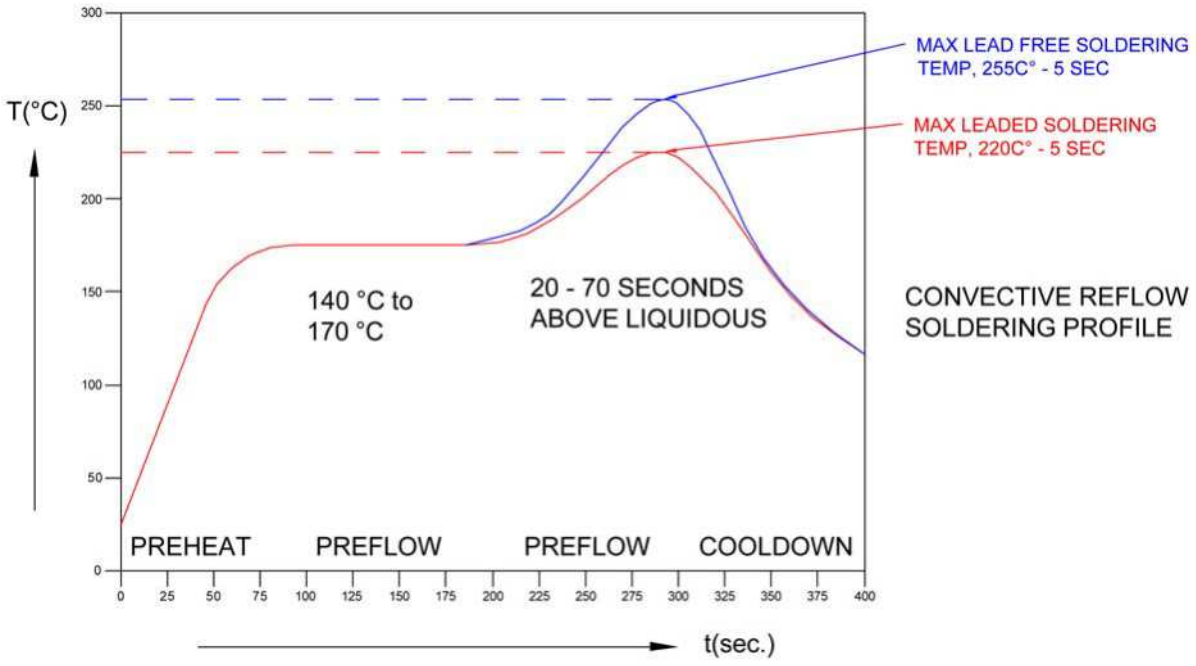


## Tape and Reel Dimensions

### Note: 3000 pcs/Reel

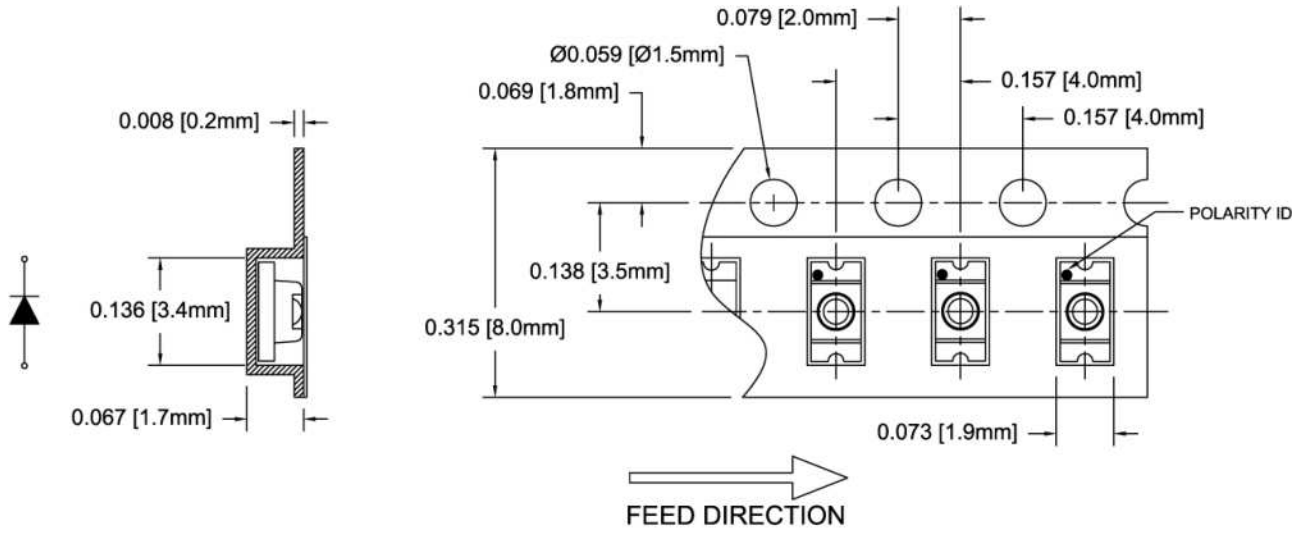


**Outline Drawings Notes:**
1. All dimensions are in inches [millimeters].
2. Standard tolerance: ±0.010" unless otherwise noted.

Bivar reserves the right to make changes at any time without notice.

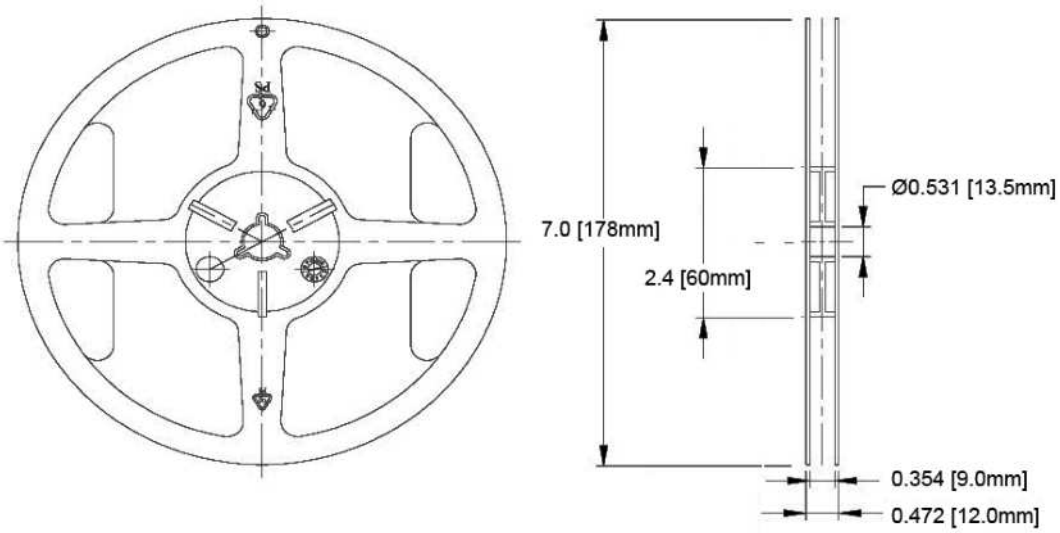


**Outline Drawings Notes:**
1. All dimensions are in inches [millimeters].
2. Standard tolerance unless otherwise noted: X.XXX ± 0.010"
   X.X ± 0.1"

## Packaging and Labeling Plan

### Note: 1 Reel / Bag

Vacuum and Heat Sealed
Clear AntiStatic Poly Bag

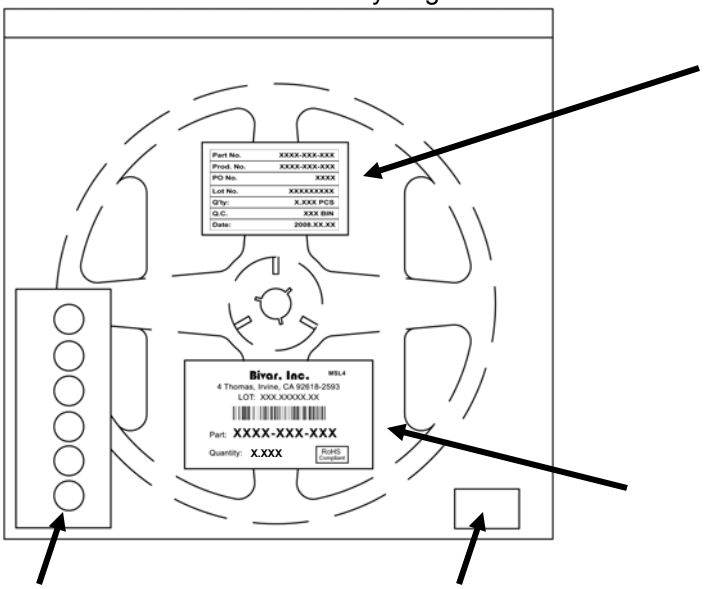


Humidity Indicator Card

Desiccant

| | |
|---|---|
| Part No. | XXXX-XXX-XXX |
| Prod. No. | XXXX-XXX-XXX |
| PO No. | XXXX |
| Lot No. | XXXXXXXXX |
| Q'ty: | X.XXX PCS |
| Q.C. | XXX BIN |
| Date: | 2008.XX.XX |

Internal Quality Control

Bivar Standard Packaging Label