NextGen Components,Inc.

PART CODE: SMCJ26CA00SBFE

SPECIFICATION SHEET

SPECIFICATION SHEET NO.	N0828-SMCJ26CA00SBFE
DATE	Aug. 28, 2021
REVISION	A0
DESCRIPITION	SMD Transient Voltage Suppressor (TVs) Diodes, SMC/DO-214AB series, SMCJ26CA Type, 2 Pads, Bidirectional Type Stand-off Voltage 26V Max. Power Dissipation: 1500 Watts. Operating Temp. Range -65°C ~+150°C Package in Tape/Reel, 3000pcs/Reel RoHS/RoHS III compliant
CUSTOMER	
CUSTOMER PART NUMBER	
CROSS REF. PART NUMBER	
ORIGINAL PART NUMBER	MDD SMCJ26CA
PART CODE	SMCJ26CA00SBFE

VENDOR APPROVE
Issued/Checked/Approved   
DATE: Aug. 28, 2021

CUSTOMER APPROVE
DATE:

NextGen Components,Inc.

PART CODE: **SMCJ26CA00SBFE**

SMD TRANSIENT VOLTAGE SUPPRESSORS DIODES SMC SERIES

MAIN FEATURE

- The plastic package carries Underwriters Laboratory Flammability Classification 94V-0
- Low profile package
- Built-in strain relief
- High temperature soldering guaranteed: 260℃/ 10 seconds at terminals
- Glass passivated chip junction
- Low inductance
- Excellent clamping capability
- 600W peak pulse power capability at 10/1000μs waveform
- Repetition rate (duty cycle): 0.01%
- Fast response time
- Repetition rate (duty cycle): 0.01%
- Typical IR less than 1μA above 10V

APPLICATION

- I/O interface
- AC/DC power supply
- Low frequency signal transmission line (RS232, RS485, etc.)

PART CODE GUIDE

RFQ
Request For Quotation

SMC	J26CA00	S	BFE
1	2	3	4

1) **SMC**: SMD Transient Voltage Suppressor (TVs) Diodes, SMC /DO-214AB series,

2) **J26CA00**: Type code for original part number SMCJ26CA

3) **S**: Package code, Tape/reel, 3000pcs/reel.

4) **BFE:** Marking code for “BFE” on the case surface, Different Marking for different specification.

NextGen Components,Inc.

PART CODE: **SMCJ26CA00SBFE**

SMD TRANSIENT VOLTAGE SUPPRESSORS DIODES SMC SERIES

MORE ITEMS AVAILABLE- Unidirectional Type

SMCJ050A00SGDE	SMCJ060A00SGDG	SMCJ065A00SGDK	SMCJ070A00SGDM	SMCJ075A00SGDP
SMCJ080A00SGDR	SMCJ085A00SGDT	SMCJ090A00SGDV	SMCJ10A000SGDX	SMCJ11A000SGDZ
SMCJ12A000SGEE	SMCJ13A000SGEG	SMCJ14A000SGEK	SMCJ15A000SGEM	SMCJ16A000SGEP
SMCJ17A000SGER	SMCJ18A000SGET	SMCJ20A000SGEV	SMCJ22A000SGEX	SMCJ24A000SGEZ
SMCJ26A000SGFE	SMCJ28A000SGFG	SMCJ30A000SGFK	SMCJ33A000SGFM	SMCJ36A000SGFP
SMCJ40A000SGFR	SMCJ43A000SGFT	SMCJ45A000SGFV	SMCJ48A000SGFX	SMCJ51A000SGFZ
SMCJ54A000SGGE	SMCJ58A000SGGG	SMCJ60A000SGGK	SMCJ64A000SGGM	SMCJ70A000SGGP
SMCJ75A000SGGR	SMCJ78A000SGGT	SMCJ85A000SGGV	SMCJ90A000SGGX	SMCJ100A00SGGZ
SMCJ110A00SGHE	SMCJ120A00SGHE	SMCJ130A00SGHK	SMCJ150A00SGHM	SMCJ160A00SGHP
SMCJ170A00SGHR	SMCJ180A00SGHT	SMCJ190A00SGHJ	SMCJ200A00SGHV	SMCJ210A00SGHW
SMCJ220A00SGHX	SMCJ250A00SGHZ	SMCJ300A00SGJE	SMCJ350A00SGJG	SMCJ400A00SGJK
SMCJ440A00SGJM				

MORE ITEMS AVAILABLE- Bidirectional Type

SMCJ050CA0SBDE	SMCJ060CA0SBDG	SMCJ065CA0SBDK	SMCJ070CA0SBDM	SMCJ075CA0SBDP
SMCJ080CA0SBDR	SMCJ085CA0SBDT	SMCJ090CA0SBDV	SMCJ10CA00SBDX	SMCJ11CA00SBDZ
SMCJ12CA00SBEE	SMCJ13A000SBEG	SMCJ14CA00SBEK	SMCJ15CA00SBEM	SMCJ16CA00SBEP
SMCJ17CA00SBER	SMCJ18CA00SBET	SMCJ20CA00SBEV	SMCJ22CA00SBEX	SMCJ24CA00SBEZ
SMCJ26CA00SBFE	SMCJ28CA00SBFG	SMCJ30CA00SGFK	SMCJ33CA00SBFM	SMCJ36CA00SBFP
SMCJ40CA00SBFR	SMCJ43CA00SBFT	SMCJ45CA00SBFV	SMCJ48CA00SBFX	SMCJ51CA00SBFZ
SMCJ54CA00SBGE	SMCJ58CA00SBGG	SMCJ60CA00SBGK	SMCJ64CA00SBGM	SMCJ70CA00SBGP
SMCJ75CA00SBGR	SMCJ78CA00SBGT	SMCJ85CA00SBGV	SMCJ90CA00SBGX	SMCJ100CA0SBGZ
SMCJ110CA0SBHE	SMCJ120CA0SBHE	SMCJ130CA0SBHK	SMCJ150CA0SBHM	SMCJ160CA0SBHP
SMCJ170CA0SBHR	SMCJ180CA0SBHT	SMCJ190CA0SBHJ	SMCJ200CA0SBHV	SMCJ210CA0SBHW
SMCJ220CA0SBHX	SMCJ250CA0SBHZ	SMCJ300CA0SBJE	SMCJ350CA0SBJG	SMCJ400CA0SBJK
SMCJ440CA0SBJM				

NextGen Components,Inc.

PART CODE: **SMCJ26CA00SBFE**

SMD TRANSIENT VOLTAGE SUPPRESSORS DIODES SMC SERIES

DIMENSION (Unit: Inch/mm)

Image for reference



Marking: BFE

SMC/DO-214AB

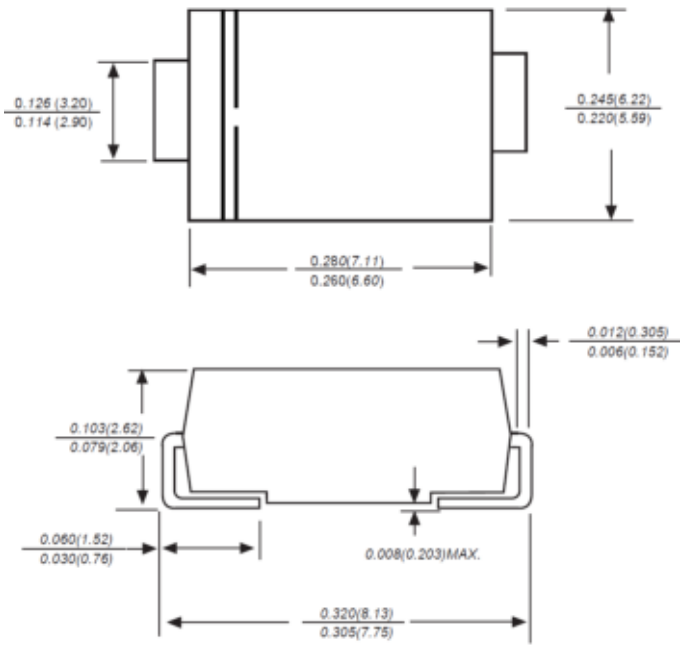

Recommend Pad Layout

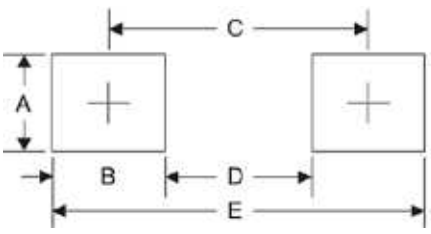

Symbol	Unit (inch)	Unit (mm)
A	0.170	4.30
B	0.160	4.10
C	0.311	7.90
D	0.150	3.80
E	0.472	12.0

NextGen Components,Inc.

PART CODE: **SMCJ26CA00SBFE**

SMD TRANSIENT VOLTAGE SUPPRESSORS DIODES SMC SERIES

MECHANICAL DATA

Case	Terminals	Polarity	Mounting Position	Weight per piece
JEDEC SMC/DO-214AB molded plastic body	Solder plated, Solderable per MIL-STD-750, Method 2026	Polarity symbol marking on case	Any	0.0070 Ounce, 0.2180 grams

MAX. RATING & CHARACTERISTICS - Ratings at 25℃ ambient temperature unless otherwise specified.

Parameter	SYMBOLS	VALUE			UNITS
		Min.	Typical	Max.	
Peak pulse power dissipation at 10/1000μs waveform (Note1, Note2, Fig.1)	P_{ppm}	1500			W
Peak pulse current of at 10/1000μs waveform (Note 1, Fig.3)	I_{ppm}			35.70	A
Steady state power dissipation at T_A=50℃ (Fig.5)	$P_{M(AV)}$	6.5			W
Peak forward surge current 8.3ms single half sine-wave superimposed on rated load (JEDEC Method) (Note3, Fig.6)	I_{FSM}		200		A
Thermal resistance junction to lead	R_{QJL}		15		°C/W
Thermal resistance junction to ambient	R_{QJA}		75		°C/W
Operating junction temperature range	T_J	-65		+150	°C
Storage temperature range	T_{STG}	-65		+150	°C

Note

1. Non-repetitive current pulse, per Fig 3 and derated above T_A=25 °C per Fig 2
2. Mounted on 5.0*5.0mm(Thickness 0.03mm) copper pads to each terminal
3. 8.3ms single half sine – wave or equivalent square wave, duty cycle – 4 pulsed per minute Max

ELECTRICALCHARACTERISTICS - Ratings at 25℃

Parameter	SYMBOLS	VALUE	UNITS
Reverse Stand-Off Voltage	V_{RWM}	26.0	V
Breakdown Voltage @I_T	V_{BR}	28.90~31.90	V
Test Current	I_T	1	mA
Maximum Clamping Voltage @I_{PP}	V_C	42.10	V
Peak Pulse Current	I_{PP}	35.70	A
Reverse Leakage @V_{RWM}	I_R	1	μA

NextGen Components,Inc.

PART CODE: **SMCJ26CA00SBFE**

SMD TRANSIENT VOLTAGE SUPPRESSORS DIODES SMC SERIES

RELIABILITY

Number	Experiment Items	Experiment Method And Conditions	Reference Documents
1	Solder Resistance Test	Test 260°C± 5°C for 10 ± 2 sec. Immerse body into solder 1/16" ± 1/32"	MIL-STD-750D METHOD-2031.2
2	Solderability Test	230°C ±5°C for 5 sec.	MIL-STD-750D METHOD-2026.1 0
3	Pull Test	1 kg in axial lead direction for 10 sec.	MIL-STD-750D METHOD-2036.4
4	Bend Test	0.5Kg Weight Applied To Each Lead, Bending Arcs 90 °C ± 5 °C For 3 Times	MIL-STD-750D METHOD-2036.4
5	High Temperature Reverse Bias Test	T_A=100°C for 1000 Hours at V_R=80% Rated V_R	MIL-STD-750D METHOD-1038.4
6	Forward Operation Life Test	TA=25°C Rated Average Rectified Current	MIL-STD-750D METHOD-1027.3
7	Intermittent Operation Life Test	On state: 5 min with rated IRMS Power Off state: 5 min with Cool Forced Air. On and off for 1000 cycles.	MIL-STD-750D METHOD-1036.3
8	Pressure Cooker Test	15 PSIG, T_A=121°C, 4 hours	MIL-S-19500 APPENOIXC
9	Temperature Cycling Test	-55°C~+125°C; 30 Minutes For Dwelled Time 5 minutes for transferred time. Total: 10 cycles.	MIL-STD-750D METHOD-1051.7
10	Thermal Shock Test	0°C for 5 minutes., 100°C for 5minutes, Total: 10 cycles	MIL-STD-750D METHOD-1056.7
11	Forward Surge Test	8.3ms Single Sale Sine-wave One Surge.	MIL-STD-750D METHOD-4066.4
12	Humidity Test	T_A=65°C, RH=98% for 1000 hours.	MIL-STD-750D METHOD-1021.3
13	High Temperature Storage life Test	150°C for 1000 Hours	MIL-STD-750D METHOD-1031.5

SUGGESTED REFLOW PROFILE (For Reference Only)

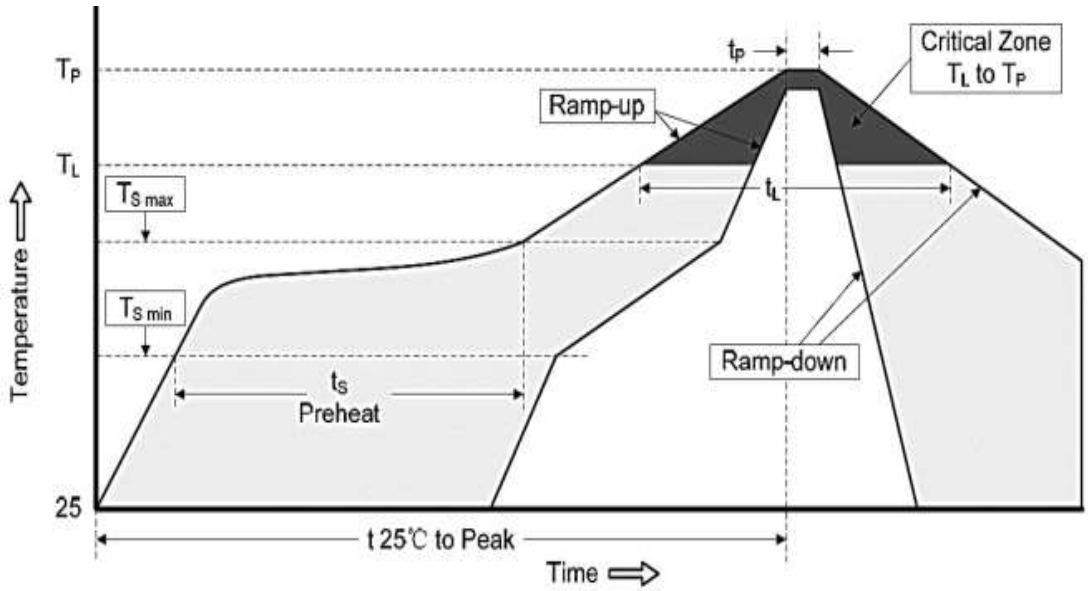

Profile Feature		Pb-Free Assembly
Average Ramp-up Rate (Ts Max to Tp)		3℃/second Max
Preheat	**Temperature Min (Ts Min.)**	150℃
	Temperature Max (Ts Max.)	200℃
	Time (ts Min. to ts Max.)	60 ~ 180 seconds
Time maintained above	**Temperature (TL)**	217℃
	Time (tL)	60 ~ 150 seconds
Peak/Classification Temperature (Tp)		260 ℃
Time within 5℃ of actual Peak Temperature (tp)		20 ~ 40 seconds
Ramp-down rate		6 ℃ /Second Max.
Time 25 ℃ to Peak Temperature		8 minutes Max.
Suggest reflow times		3 Times Max.

SMD TRANSIENT VOLTAGE SUPPRESSORS DIODES SMC SERIES

RATINGS AND CHARACTERISTIC CURVES (For Reference Only)

Figure 1. Peak Pulse Power Rating Curve

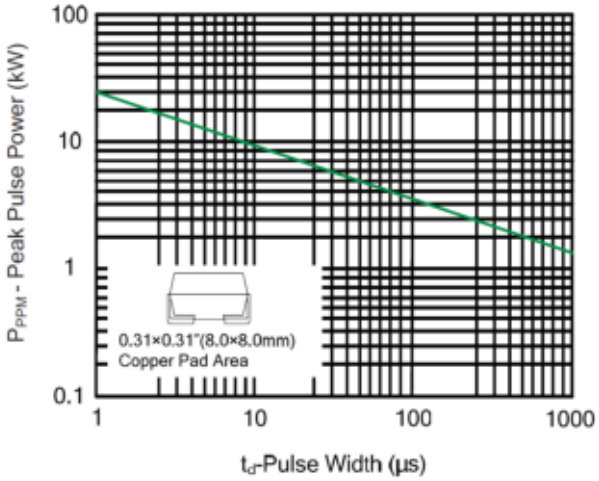

Figure 2. Pulse Derating Curve

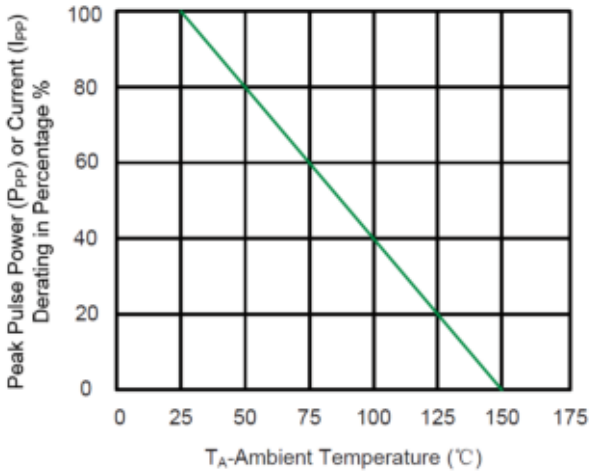

Figure 3. Pulse Waveform

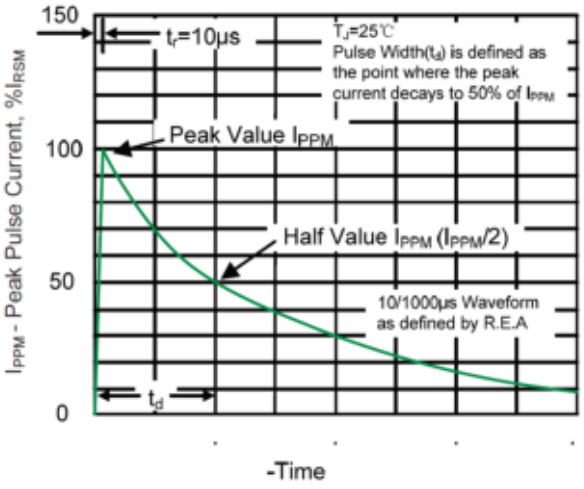

Figure 4. Typical Junction Capacitance

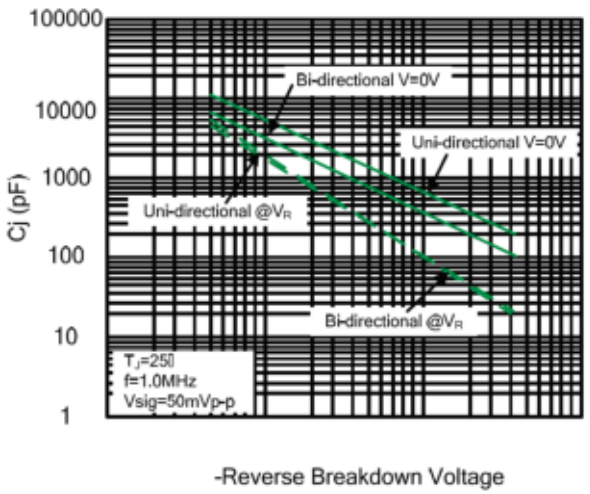

Figure 5. Steady State Power Dissipation Derating curve

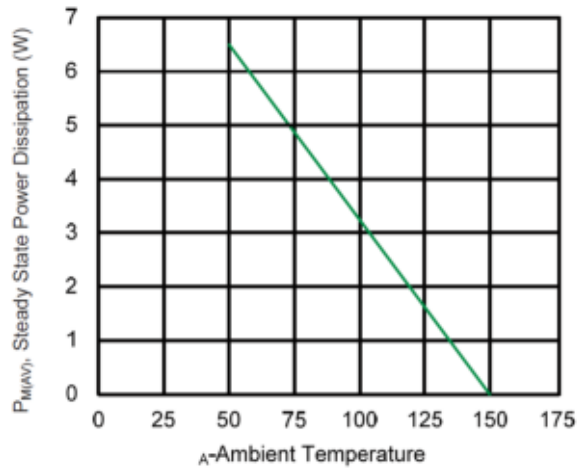

Figure 6. Maximum Non-Repetitive Forward Surge Current Uni-Directional Only

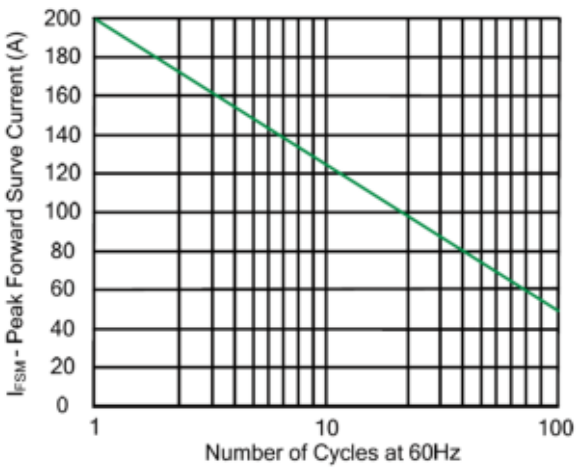

NextGen Components,Inc.

PART CODE: **SMCJ26CA00SBFE**

SMD TRANSIENT VOLTAGE SUPPRESSORS DIODES SMC SERIES

TAPE/REEL (Unit: mm)

All Devices are packed in accordance with EIA standard RS-481-A and specifications.

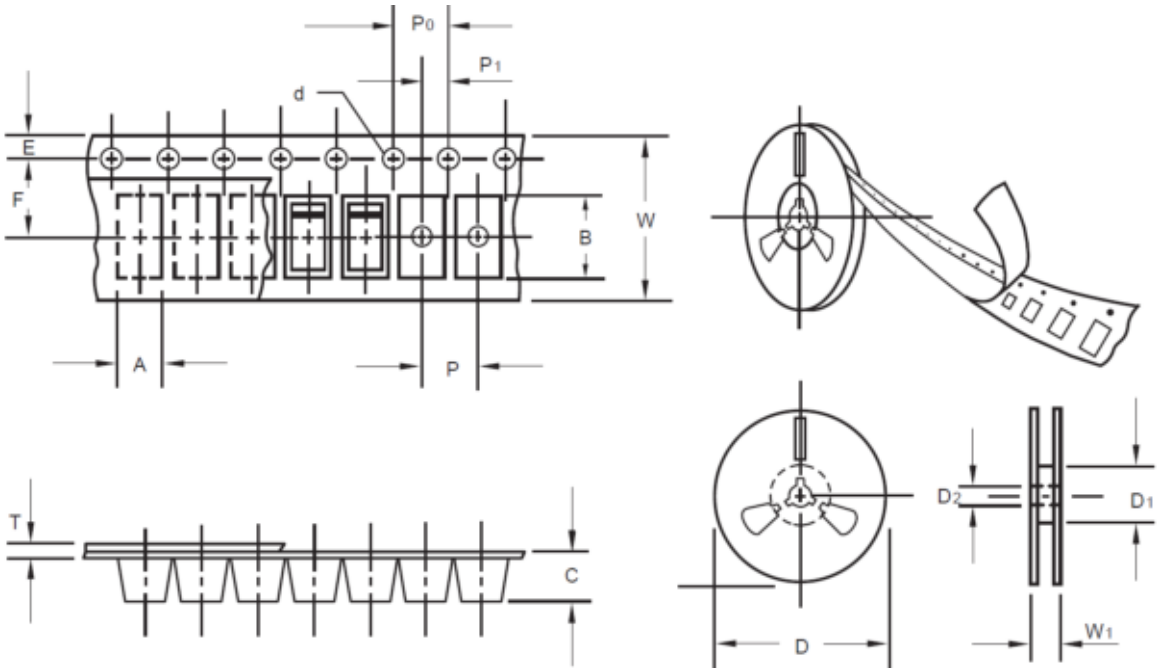

Item	Symbol	Tolerance	SMC/DO-214AB
Carrier width	A	0.1	6.15
Carrier Length	B	0.1	8.41
Carrier Depth	C	0.1	2.42
Sprocket hole	d	0.05	1.50
13”Reel outside diameter	D	2.0	330.00
13”Reel inner diameter	D1	Min.	50.00
7”Reel outside diameter	-	-	-
7”Reel inner diameter	-	-	-
Feed hole diameter	D2	0.5	13.00
Sprocket hole position	E	0.1	1.75
Punch hole position	F	0.1	7.50
Punch hole pitch	P	0.1	8.00
Sprocket hole pitch	P0	0.1	4.00
Embossment center	P1	0.1	2.00
Overall tape thickness	T	0.1	0.25
Tape width	W	0.3	16.00
Reel width	W1	1.0	16.50

NextGen Components,Inc.

PART CODE: **SMCJ26CA00SBFE**

SMD TRANSIENT VOLTAGE SUPPRESSORS DIODES SMC SERIES

PACKAGE

Case Code	Reel Size	MPQ (pcs)	Component Spacing (mm)	Qty. Per Box (pcs)	Inner Box L*W*H (mm)	Reel Size (mm)	Carton size L*W*H (mm)	Qty. Per Carton (pcs)	G. W (kg)
SMC	13”	3,000		3,000	190*190*41	330	380*380*380	42,000	15.5

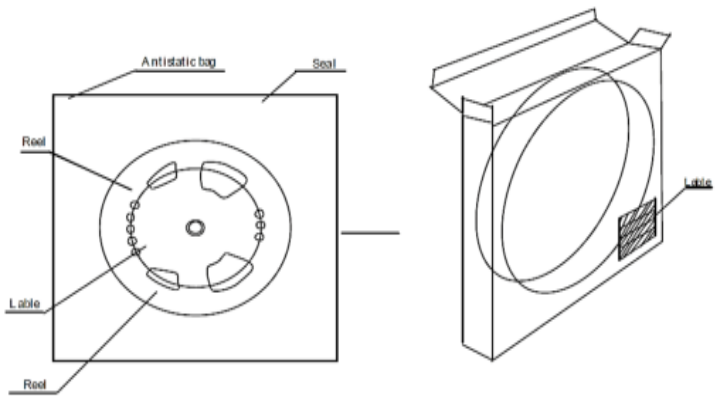

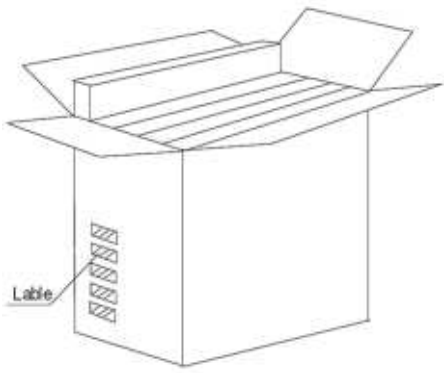

DISCLAIMER

NextGen Component, Inc. reserves the right to make changes to the product(s) and or information contained herein without notice. No liability is assumed as a result of their use or application. No rights under any patent accompany the sale of any such product(s) or information