NextGen Components,Inc.

# PART CODE: SMCJ40CA00SBFR

## SPECIFICATION SHEET

| | |
|---|---|
| **SPECIFICATION SHEET NO.** | N0828-SMCJ40CA00SBFR |
| **DATE** | Aug. 28, 2021 |
| **REVISION** | A0 |
| **DESCRIPITION** | SMD Transient Voltage Suppressor (TVs) Diodes, SMC/DO-214AB series,<br>SMCJ40CA Type, 2 Pads, Bidirectional Type<br>Stand-off Voltage 40V Max. Power Dissipation: 1500 Watts.<br>Operating Temp. Range -65°C ~+150°C<br>Package in Tape/Reel, 3000pcs/Reel<br>RoHS/RoHS III compliant |
| **CUSTOMER** | |
| **CUSTOMER PART NUMBER** | |
| **CROSS REF. PART NUMBER** | |
| **ORIGINAL PART NUMBER** | MDD SMCJ40CA |
| **PART CODE** | SMCJ40CA00SBFR |

| **VENDOR APPROVE** |
|---|
| Issued/Checked/Approved       |
| DATE: Aug. 28, 2021 |

| **CUSTOMER APPROVE** |
|---|
| |
| DATE: |

NextGen Components,Inc.

PART CODE: **SMCJ40CA00SBFR**

# SMD TRANSIENT VOLTAGE SUPPRESSORS DIODES SMC SERIES

## MAIN FEATURE

- The plastic package carries Underwriters Laboratory Flammability Classification 94V-0
- Low profile package
- Built-in strain relief
- High temperature soldering guaranteed: 260℃/ 10 seconds at terminals
- Glass passivated chip junction
- Low inductance
- Excellent clamping capability
- 600W peak pulse power capability at 10/1000μs waveform
- Repetition rate (duty cycle): 0.01%
- Fast response time
- Repetition rate (duty cycle): 0.01%
- Typical IR less than 1μA above 10V

## APPLICATION

- I/O interface
- AC/DC power supply
- Low frequency signal transmission line (RS232, RS485, etc.)

## PART CODE GUIDE

**RFQ**
Request For Quotation

| SMC | J40CA00 | S | BFR |
|---|---|---|---|
| 1 | 2 | 3 | 4 |

1) **SMC**: SMD Transient Voltage Suppressor (TVs) Diodes, SMC /DO-214AB series,

2) **J40CA00**: Type code for original part number SMCJ40CA

3) **S**: Package code, Tape/reel, 3000pcs/reel.

4) **BFR:** Marking code for “BFR” on the case surface, Different Marking for different specification.

NextGen Components,Inc.

PART CODE: **SMCJ40CA00SBFR**

# SMD TRANSIENT VOLTAGE SUPPRESSORS DIODES SMC SERIES

## MORE ITEMS AVAILABLE- Unidirectional Type

| | | | | |
|---|---|---|---|---|
| SMCJ050A00SGDE | SMCJ060A00SGDG | SMCJ065A00SGDK | SMCJ070A00SGDM | SMCJ075A00SGDP |
| SMCJ080A00SGDR | SMCJ085A00SGDT | SMCJ090A00SGDV | SMCJ10A000SGDX | SMCJ11A000SGDZ |
| SMCJ12A000SGEE | SMCJ13A000SGEG | SMCJ14A000SGEK | SMCJ15A000SGEM | SMCJ16A000SGEP |
| SMCJ17A000SGER | SMCJ18A000SGET | SMCJ20A000SGEV | SMCJ22A000SGEX | SMCJ24A000SGEZ |
| SMCJ26A000SGFE | SMCJ28A000SGFG | SMCJ30A000SGFK | SMCJ33A000SGFM | SMCJ36A000SGFP |
| SMCJ40A000SGFR | SMCJ43A000SGFT | SMCJ45A000SGFV | SMCJ48A000SGFX | SMCJ51A000SGFZ |
| SMCJ54A000SGGE | SMCJ58A000SGGG | SMCJ60A000SGGK | SMCJ64A000SGGM | SMCJ70A000SGGP |
| SMCJ75A000SGGR | SMCJ78A000SGGT | SMCJ85A000SGGV | SMCJ90A000SGGX | SMCJ100A00SGGZ |
| SMCJ110A00SGHE | SMCJ120A00SGHE | SMCJ130A00SGHK | SMCJ150A00SGHM | SMCJ160A00SGHP |
| SMCJ170A00SGHR | SMCJ180A00SGHT | SMCJ190A00SGHJ | SMCJ200A00SGHV | SMCJ210A00SGHW |
| SMCJ220A00SGHX | SMCJ250A00SGHZ | SMCJ300A00SGJE | SMCJ350A00SGJG | SMCJ400A00SGJK |
| SMCJ440A00SGJM | | | | |

## MORE ITEMS AVAILABLE- Bidirectional Type

| | | | | |
|---|---|---|---|---|
| SMCJ050CA0SBDE | SMCJ060CA0SBDG | SMCJ065CA0SBDK | SMCJ070CA0SBDM | SMCJ075CA0SBDP |
| SMCJ080CA0SBDR | SMCJ085CA0SBDT | SMCJ090CA0SBDV | SMCJ10CA00SBDX | SMCJ11CA00SBDZ |
| SMCJ12CA00SBEE | SMCJ13A000SBEG | SMCJ14CA00SBEK | SMCJ15CA00SBEM | SMCJ16CA00SBEP |
| SMCJ17CA00SBER | SMCJ18CA00SBET | SMCJ20CA00SBEV | SMCJ22CA00SBEX | SMCJ24CA00SBEZ |
| SMCJ26CA00SBFE | SMCJ28CA00SBFG | SMCJ30CA00SBFK | SMCJ33CA00SBFM | SMCJ36CA00SBFP |
| **SMCJ40CA00SBFR** | SMCJ43CA00SBFT | SMCJ45CA00SBFV | SMCJ48CA00SBFX | SMCJ51CA00SBFZ |
| SMCJ54CA00SBGE | SMCJ58CA00SBGG | SMCJ60CA00SBGK | SMCJ64CA00SBGM | SMCJ70CA00SBGP |
| SMCJ75CA00SBGR | SMCJ78CA00SBGT | SMCJ85CA00SBGV | SMCJ90CA00SBGX | SMCJ100CA0SBGZ |
| SMCJ110CA0SBHE | SMCJ120CA0SBHE | SMCJ130CA0SBHK | SMCJ150CA0SBHM | SMCJ160CA0SBHP |
| SMCJ170CA0SBHR | SMCJ180CA0SBHT | SMCJ190CA0SBHJ | SMCJ200CA0SBHV | SMCJ210CA0SBHW |
| SMCJ220CA0SBHX | SMCJ250CA0SBHZ | SMCJ300CA0SBJE | SMCJ350CA0SBJG | SMCJ400CA0SBJK |
| SMCJ440CA0SBJM | | | | |

NextGen Components,Inc.

PART CODE: **SMCJ40CA00SBFR**

# SMD TRANSIENT VOLTAGE SUPPRESSORS DIODES SMC SERIES

## DIMENSION (Unit: Inch/mm)

**Image for reference**



**Marking: BFR**

**SMC/DO-214AB**

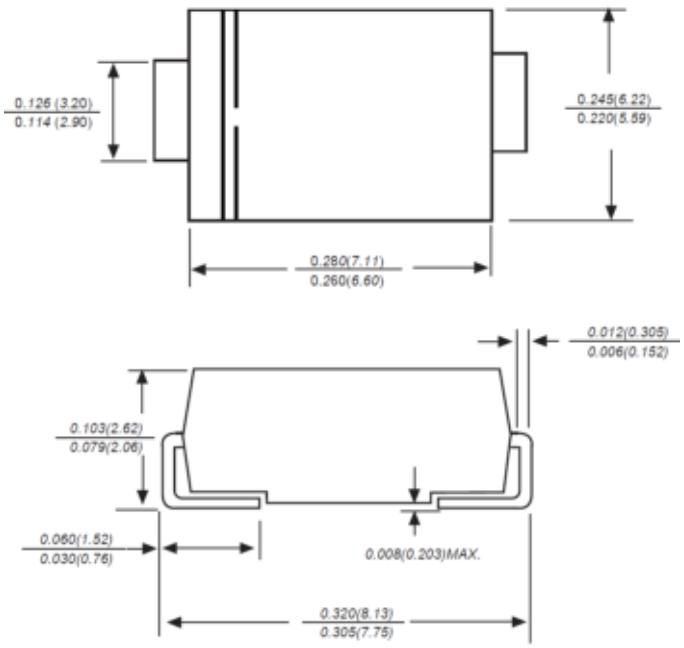


**Recommend Pad Layout**

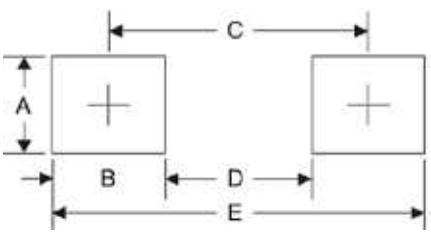


| Symbol | Unit (inch) | Unit (mm) |
|---|---|---|
| A | 0.170 | 4.30 |
| B | 0.160 | 4.10 |
| C | 0.311 | 7.90 |
| D | 0.150 | 3.80 |
| E | 0.472 | 12.0 |

NextGen Components,Inc.

PART CODE: **SMCJ40CA00SBFR**

# SMD TRANSIENT VOLTAGE SUPPRESSORS DIODES SMC SERIES

## MECHANICAL DATA

| Case | Terminals | Polarity | Mounting Position | Weight per piece |
|---|---|---|---|---|
| JEDEC SMC/DO-214AB molded plastic body | Solder plated, Solderable per MIL-STD-750, Method 2026 | Polarity symbol marking on case | Any | 0.0070 Ounce, 0.2180 grams |

## MAX. RATING & CHARACTERISTICS - Ratings at 25℃ ambient temperature unless otherwise specified.

| Parameter | SYMBOLS | VALUE | | | UNITS |
|---|---|---|---|---|---|
| | | Min. | Typical | Max. | |
| **Peak pulse power dissipation at 10/1000μs waveform (Note1, Note2, Fig.1)** | $P_{ppm}$ | 1500 | | | W |
| **Peak pulse current of at 10/1000μs waveform (Note 1, Fig.3)** | $I_{ppm}$ | | | 23.30 | A |
| **Steady state power dissipation at $T_A$=50℃ (Fig.5)** | $P_{M(AV)}$ | 6.5 | | | W |
| **Peak forward surge current 8.3ms single half sine-wave superimposed on rated load (JEDEC Method) (Note3, Fig.6)** | $I_{FSM}$ | | 200 | | A |
| **Thermal resistance junction to lead** | $R_{QJL}$ | | 15 | | °C/W |
| **Thermal resistance junction to ambient** | $R_{QJA}$ | | 75 | | °C/W |
| **Operating junction temperature range** | $T_J$ | -65 | | +150 | °C |
| **Storage temperature range** | $T_{STG}$ | -65 | | +150 | °C |

Note

1. Non-repetitive current pulse, per Fig 3 and derated above $T_A$=25 °C per Fig 2
2. Mounted on 5.0*5.0mm(Thickness 0.03mm) copper pads to each terminal
3. 8.3ms single half sine – wave or equivalent square wave, duty cycle – 4 pulsed per minute Max

## ELECTRICALCHARACTERISTICS - Ratings at 25℃

| Parameter | SYMBOLS | VALUE | UNITS |
|---|---|---|---|
| Reverse Stand-Off Voltage | $V_{RWM}$ | 40 | V |
| Breakdown Voltage @$I_T$ | $V_{BR}$ | 44.40~49.10 | V |
| Test Current | $I_T$ | 1 | mA |
| Maximum Clamping Voltage @$I_{PP}$ | $V_C$ | 64.50 | V |
| Peak Pulse Current | $I_{PP}$ | 23.30 | A |
| Reverse Leakage @$V_{RWM}$ | $I_R$ | 1 | μA |

NextGen Components,Inc.

PART CODE: **SMCJ40CA00SBFR**

# SMD TRANSIENT VOLTAGE SUPPRESSORS DIODES SMC SERIES

## RELIABILITY

| Number | Experiment Items | Experiment Method And Conditions | Reference Documents |
|---|---|---|---|
| 1 | Solder Resistance Test | Test 260°C± 5°C for 10 ± 2 sec. Immerse body into solder 1/16" ± 1/32" | MIL-STD-750D METHOD-2031.2 |
| 2 | Solderability Test | 230°C ±5°C for 5 sec. | MIL-STD-750D METHOD-2026.1 0 |
| 3 | Pull Test | 1 kg in axial lead direction for 10 sec. | MIL-STD-750D METHOD-2036.4 |
| 4 | Bend Test | 0.5Kg Weight Applied To Each Lead, Bending Arcs 90 °C ± 5 °C For 3 Times | MIL-STD-750D METHOD-2036.4 |
| 5 | High Temperature Reverse Bias Test | $T_A$=100°C for 1000 Hours at $V_R$=80% Rated $V_R$ | MIL-STD-750D METHOD-1038.4 |
| 6 | Forward Operation Life Test | TA=25°C Rated Average Rectified Current | MIL-STD-750D METHOD-1027.3 |
| 7 | Intermittent Operation Life Test | On state: 5 min with rated IRMS Power Off state: 5 min with Cool Forced Air. On and off for 1000 cycles. | MIL-STD-750D METHOD-1036.3 |
| 8 | Pressure Cooker Test | 15 PSIG, $T_A$=121°C, 4 hours | MIL-S-19500 APPENOIXC |
| 9 | Temperature Cycling Test | -55°C~+125°C; 30 Minutes For Dwelled Time 5 minutes for transferred time. Total: 10 cycles. | MIL-STD-750D METHOD-1051.7 |
| 10 | Thermal Shock Test | 0°C for 5 minutes., 100°C for 5minutes, Total: 10 cycles | MIL-STD-750D METHOD-1056.7 |
| 11 | Forward Surge Test | 8.3ms Single Sale Sine-wave One Surge. | MIL-STD-750D METHOD-4066.4 |
| 12 | Humidity Test | $T_A$=65°C, RH=98% for 1000 hours. | MIL-STD-750D METHOD-1021.3 |
| 13 | High Temperature Storage life Test | 150°C for 1000 Hours | MIL-STD-750D METHOD-1031.5 |

# SMD TRANSIENT VOLTAGE SUPPRESSORS DIODES SMC SERIES

**SUGGESTED REFLOW PROFILE (For Reference Only)**

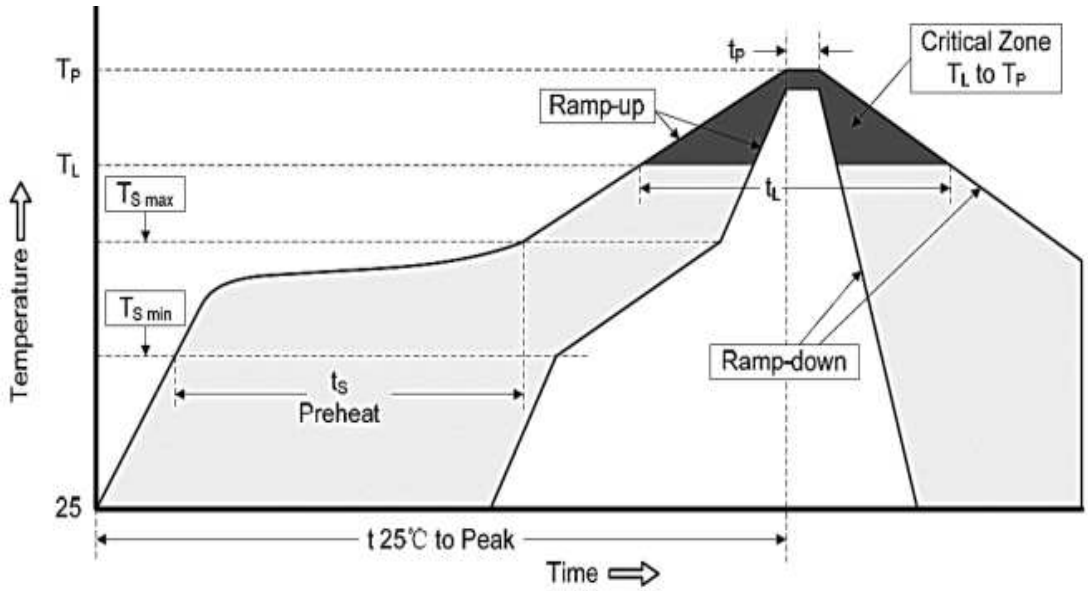


| | | |
|---|---|---|
| **Profile Feature** | | Pb-Free Assembly |
| **Average Ramp-up Rate (Ts Max to Tp)** | | 3℃/second Max |
| **Preheat** | **Temperature Min (Ts Min.)** | 150℃ |
| | **Temperature Max (Ts Max.)** | 200℃ |
| | **Time (ts Min. to ts Max.)** | 60 ~ 180 seconds |
| **Time maintained above** | **Temperature (TL)** | 217℃ |
| | **Time (tL)** | 60 ~ 150 seconds |
| **Peak/Classification Temperature (Tp)** | | 260 ℃ |
| **Time within 5℃ of actual Peak Temperature (tp)** | | 20 ~ 40 seconds |
| **Ramp-down rate** | | 6 ℃ /Second Max. |
| **Time 25 ℃ to Peak Temperature** | | 8 minutes Max. |
| **Suggest reflow times** | | 3 Times Max. |

# SMD TRANSIENT VOLTAGE SUPPRESSORS DIODES SMC SERIES

## RATINGS AND CHARACTERISTIC CURVES (For Reference Only)

Figure 1. Peak Pulse Power Rating Curve

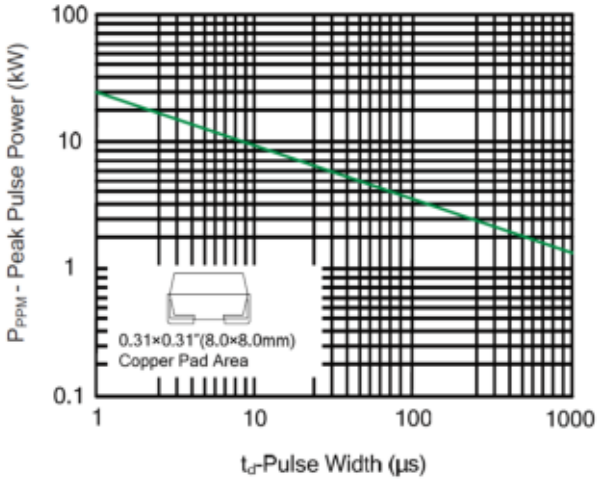


Figure 2. Pulse Derating Curve

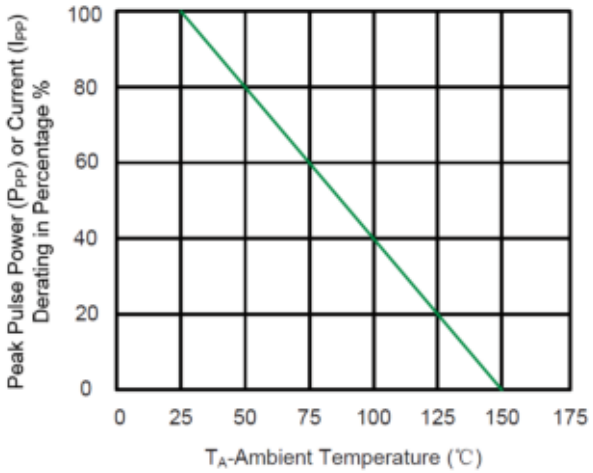


Figure 3. Pulse Waveform

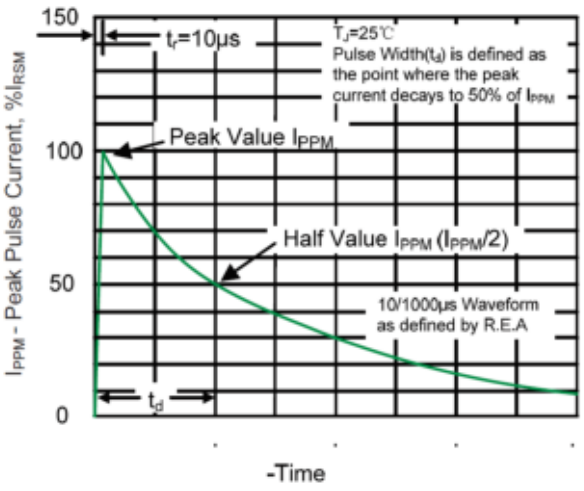


Figure 4. Typical Junction Capacitance

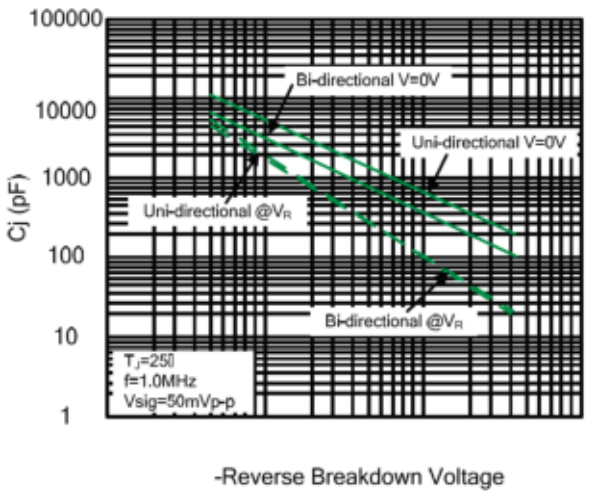


Figure 5. Steady State Power Dissipation Derating curve

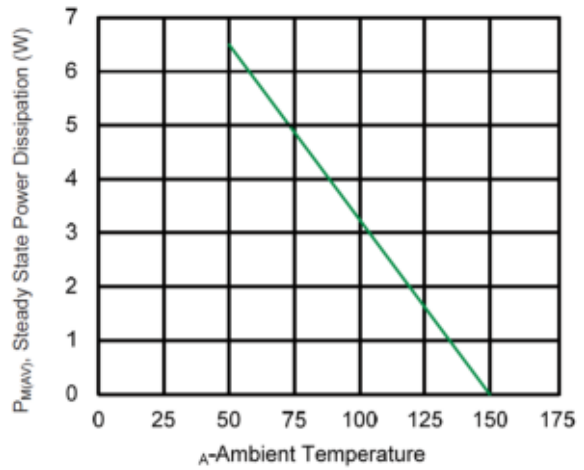


Figure 6. Maximum Non-Repetitive Forward Surge Current Uni-Directional Only

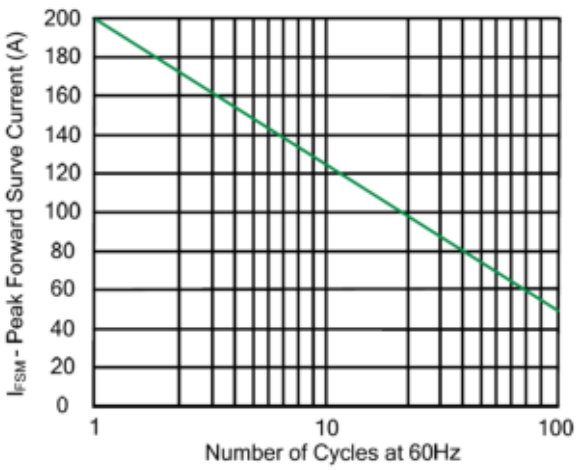

NextGen Components,Inc.

PART CODE: **SMCJ40CA00SBFR**

# SMD TRANSIENT VOLTAGE SUPPRESSORS DIODES SMC SERIES

## TAPE/REEL (Unit: mm)

All Devices are packed in accordance with EIA standard RS-481-A and specifications.

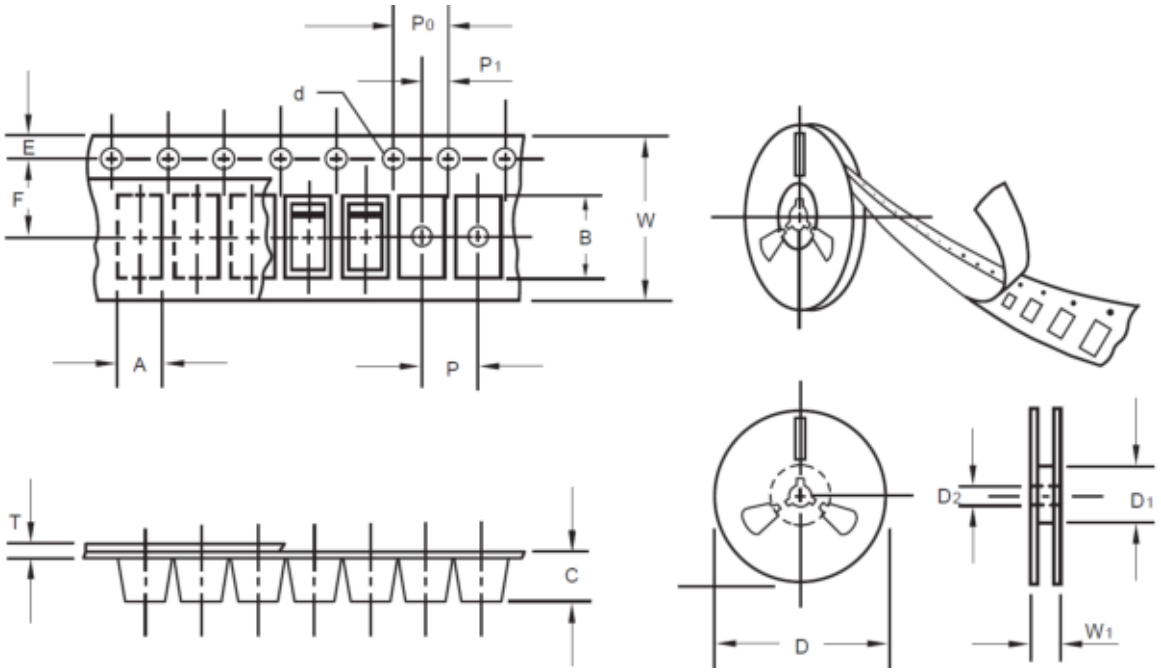


| Item | Symbol | Tolerance | SMC/DO-214AB |
|---|---|---|---|
| Carrier width | A | 0.1 | 6.15 |
| Carrier Length | B | 0.1 | 8.41 |
| Carrier Depth | C | 0.1 | 2.42 |
| Sprocket hole | d | 0.05 | 1.50 |
| 13”Reel outside diameter | D | 2.0 | 330.00 |
| 13”Reel inner diameter | D1 | Min. | 50.00 |
| 7”Reel outside diameter | - | - | - |
| 7”Reel inner diameter | - | - | - |
| Feed hole diameter | D2 | 0.5 | 13.00 |
| Sprocket hole position | E | 0.1 | 1.75 |
| Punch hole position | F | 0.1 | 7.50 |
| Punch hole pitch | P | 0.1 | 8.00 |
| Sprocket hole pitch | P0 | 0.1 | 4.00 |
| Embossment center | P1 | 0.1 | 2.00 |
| Overall tape thickness | T | 0.1 | 0.25 |
| Tape width | W | 0.3 | 16.00 |
| Reel width | W1 | 1.0 | 16.50 |

NextGen Components,Inc.

PART CODE: **SMCJ40CA00SBFR**

# SMD TRANSIENT VOLTAGE SUPPRESSORS DIODES SMC SERIES

## PACKAGE

| Case Code | Reel Size | MPQ (pcs) | Component Spacing (mm) | Qty. Per Box (pcs) | Inner Box L*W*H (mm) | Reel Size (mm) | Carton size L*W*H (mm) | Qty. Per Carton (pcs) | G. W (kg) |
|---|---|---|---|---|---|---|---|---|---|
| SMC | 13” | 3,000 | | 3,000 | 190*190*41 | 330 | 380*380*380 | 42,000 | 15.5 |

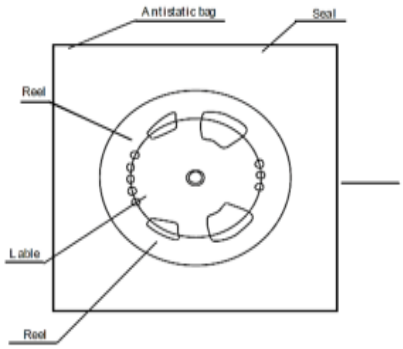


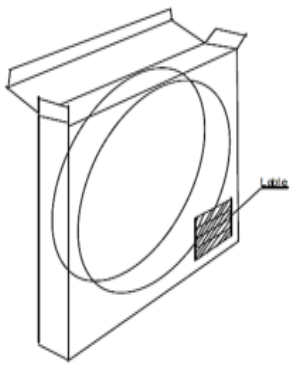


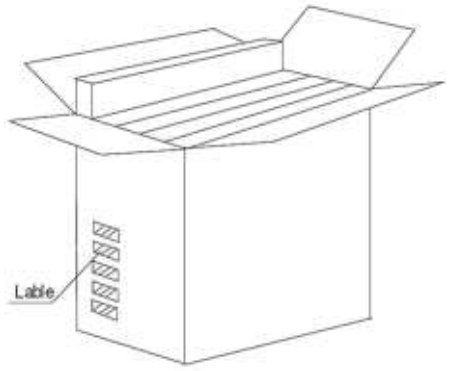


## DISCLAIMER

NextGen Component, Inc. reserves the right to make changes to the product(s) and or information contained herein without notice. No liability is assumed as a result of their use or application. No rights under any patent accompany the sale of any such product(s) or information