ST1480AB
ST1480AC

3.3 V powered, 15 kV ESD protected, up to 12 Mbps true RS-485/RS-422 transceiver

Features

- ESD protection
  - ±15 kV human body model
  - ±8 kV IEC 1000-4-2 contact discharge
- Operate from a single 3.3 V supply - no charge pump required
- Interoperable with 5 V logic
- 1 µA low current shutdown mode max
- Guaranteed 12 Mbps data rate
- -7 to 12 common mode input voltage range
- Half duplex versions available
- Industry standard 75176 pinout
- Current limiting and thermal shutdown for driver overload protection
- Guaranteed high receiver output state for floating, shorted or terminated inputs with no signal present
- Allow up to 64 transceivers on the bus

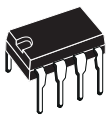

DIP-8

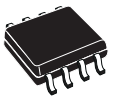

SO-8

Description

The ST1480A is ±15 kV ESD protected, 3.3 V low power transceiver for RS-485 and RS-422 communications. The device contains one driver and one receiver in half duplex configuration.

The ST1480A transmits and receives at a guaranteed data rate of at least 12 Mbps.

All transmitter outputs and receiver inputs are protected to ±15 kV using Human Body Model.

Driver is short-circuit current limited and is protected against excessive power dissipation by thermal shutdown circuitry that places the driver outputs into a high-impedance state.

The ST1480A input has a true fail-safe feature that guarantees a logic high output if both inputs are open circuit, shorted together or in the presence of a termination with no signal on the bus.

Figure 1. Device summary

Part number	Temperature range	Package	Packaging
ST1480ACN	0 to 70 °C	DIP-8	50 parts per tube / 40 tube per box
ST1480ACDR	0 to 70 °C	SO-8 (tape & reel)	2500 parts per reel
ST1480ABDR	-40 to 85 °C	SO-8 (tape & reel)	2500 parts per reel

Contents

1 Pin configuration 3

2 Truth tables 4

3 Maximum ratings 5

4 Electrical characteristics 6

5 Test circuits and typical characteristics 9

6 Package mechanical data 17

7 Revision history 21

1 Pin configuration

Figure 2. Pin connections

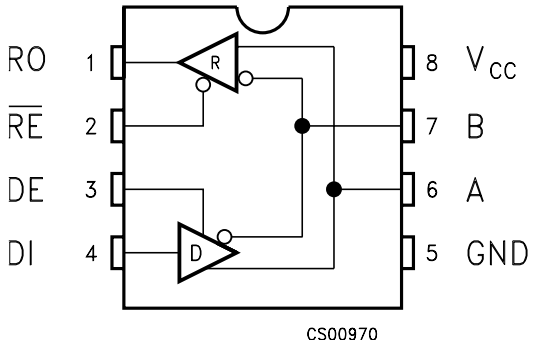

Table 1. Pin description

Pin n°	Symbol	Name and function
1	RO	Receiver output. If A>B by 200mV, RO will be high; if A<B by 200mV, RO will be low
2	$\overline{RE}$	Receiver Output Enable. RO is enabled when RE is low; RO is high impedance when RE is high. If RE is high and DE is low, the device will enter a low power shutdown mode.
3	DE	Driver Output Enable. The driver outputs are enabled by bringing DE high. They are high impedance when DE is low. If RE is high DE is low, the device will enter a low-power shutdown mode. If the driver outputs are enabled, the part functions as line driver, while they are high impedance, it functions as line receivers if RE is low.
4	DI	Driver input. A low on DI forces output A low and output B high. Similarly, a high on DI forces output A high and output B low
5	GND	Ground
6	A	Non-inverting receiver input and non-inverting driver output
7	B	Inverting receiver input and inverting driver output
8	V_{CC}	Supply voltage: V_{CC}= 3V to 3.6V

2 Truth tables

Table 2. Truth table (driver)

Inputs			Outputs		Mode
$\overline{RE}$	DE	DI	B	A	
X	H	H	L	H	Normal
X	H	L	H	L	Normal
L	L	X	Z	Z	Normal
H	L	X	Z	Z	Shutdown

Note: X= Don't care; Z=High impedance

Table 3. Truth table (receiver)

Inputs			Output	Mode
RE	DE	A-B	RO	
L	L	≥ -0.015V	H	Normal
L	L	≤-0.2V	L	Normal
L	L	Inputs open	H	Normal
L	L	Inputs shorted	H	Normal
H	L	X	Z	Shutdown

Note: X= Don't care; Z=High impedance

3 Maximum ratings

Table 4. Absolute maximum ratings

Symbol	Parameter	Value	Unit
V_{CC}	Supply voltage	7	V
V_I	Control input voltage ($\overline{RE}$, DE)	-0.3 to 7	V
V_{DI}	Driver input voltage (DI)	-0.3 to 7	V
V_{DO}	Driver output voltage (A, B)	± 14	V
V_{RI}	Receiver input voltage (A, B)	± 14	V
V_{RO}	Receiver output voltage (RO)	-0.3 to (V_{CC} + 0.3)	V

Note: Absolute maximum ratings are those values beyond which damage to the device may occur. Functional operation under these condition is not implied.

Table 5. ESD performance: transmitter outputs, receiver inputs

Symbol	Parameter	Test conditions	Min.	Typ.	Max.	Unit
ESD	ESD protection voltage	Human body model		±15		kV
ESD	ESD protection voltage	IEC-1000-4-2 Contact discharge		±8		kV

4 Electrical characteristics

Table 6. Electrical characteristics

V_{CC} = 3 V to 3.6 V, T_A = -40 to 85 °C, unless otherwise specified. Typical values are referred to T_A = 25 °C)

Symbol	Parameter	Test conditions		Min.	Typ.	Max.	Unit
I_{SUPPLY}	V_{CC} Power supply current	No Load, DI=0V or V_{CC}	$\overline{DE}$=V_{CC}, $\overline{RE}$=0V or V_{CC}		1.3	2.2	mA
			DE=0V, $\overline{RE}$=0V		1.2	1.9	mA
I_{SHDN}	Shutdown supply current	DE=0V, RE=V_{CC}, DI=0V or V_{CC}			0.002	1	µA

Table 7. Logic input electrical characteristics

V_{CC} = 3 V to 3.6 V, T_A = -40 to 85 °C, unless otherwise specified. Typical values are referred to T_A = 25 °C)

Symbol	Parameter	Test conditions		Min.	Typ.	Max.	Unit
V_{IL}	Input logic threshold low	DE, DI, RE			1.3	0.8	V
V_{IH}	Input logic threshold high	DE, DI, RE		2			V
I_{IN1}	Logic input current	DE, DI, RE				±2.0	µA
I_{IN2}	Input current (A, B)	DE=0V, V_{CC}= 0 or 3.6V	V_{IN}=12V			1	mA
			V_{IN}=-7V			-0.8	mA

Table 8. Transmitter electrical characteristics

V_{CC} = 3 V to 3.6 V, T_A = -40 to 85 °C, unless otherwise specified. Typical values are referred to T_A = 25 °C)

Symbol	Parameter	Test conditions	Min.	Typ.	Max.	Unit
V_{OD}	Differential drive output	R_L= 100Ω (RS-422) (*Figure 2*)	2			V
		R_L= 54Ω (RS-485) (*Figure 2*)	1.5			V
		R_L= 60Ω (RS-485) (*Figure 3*)	1.5			V
ΔV_{OD}	Change in magnitude of driver differential output voltage for complementary output states (*Note: 1*)	R_L= 54Ω or 100Ω (*Figure 2*)			0.2	V
V_{OC}	Driver common mode output voltage	R_L= 54Ω or 100Ω (*Figure 2*)			3	V
ΔV_{OC}	Change in magnitude of driver common mode output voltage (*Note: 1*)	R_L= 54Ω or 100Ω (*Figure 2*)			0.2	V
I_{OSD}	Driver short circuit output current				±250	mA

Table 9. Receiver electrical characteristics

V_{CC} = 3V to 3.6V, T_A = -40 to 85°C, unless otherwise specified. Typical values are referred to T_a = 25°C)

Symbol	Parameter	Test Conditions	Min.	Typ.	Max.	Unit
V_{TH}	Receiver differential threshold voltage	V_{CM} = -7V to 12V, DE = 0	-0.2		-0.015	V
ΔV_{TH}	Receiver input hysteresis	V_{CM} = 0V		30		V
V_{OH}	Receiver output high voltage	I_{OUT} = -4mA, V_{ID} = 200mV, (*Figure 9*)	2			V
V_{OL}	Receiver output low voltage	I_{OUT} = 4mA, V_{ID} = -200mV, (*Figure 4*)			0.4	V
I_{OZR}	3-State (high impedance) output current at receiver	V_{CC} = 3.6V, V_O = 0V to V_{CC}			±1	µA
R_{RIN}	Receiver input resistance	V_{CM} = -7V to 12V	24			kΩ
I_{OSR}	Receiver short-circuit current	V_{RO} = 0V to V_{CC}	7		60	mA

Table 10. Driver switching characteristics

V_{CC} = 3V to 3.6V, T_A = -40 to 85°C, unless otherwise specified. Typical values are referred to T_a = 25°C)

Symbol	Parameter	Test Conditions	Min.	Typ.	Max.	Unit
D_R	Maximum data rate		12	15		Mbps
t_{DD}	Differential output delay	R_L= 60Ω, C_L = 15pF, (*Figure 5* and *Figure 6*)		18	30	ns
t_{TD}	Differential output transition time	R_L= 60Ω, C_L = 15pF, (*Figure 5* and *Figure 6*)		12	20	ns
t_{PLH} t_{PHL}	Propagation delay	R_L= 27Ω, C_L = 15pF, (*Figure 9* and *Figure 10*)		18	30	ns
t_{PDS}	$\lvert t_{PLH} - t_{PHL} \rvert$ propagation delay skew (*Note 2*)	R_L= 27Ω, C_L = 15pF, (*Figure 9* and *Figure 10*)		2	5	ns
t_{PZL}	Output enable time	R_L= 110Ω, (*Figure 11* and *Figure 12*)		19	35	ns
t_{PZH}	Output enable time	R_L= 110Ω, (*Figure 7* and *Figure 8*)		30	50	ns
t_{PHZ}	Output disable time	R_L= 110Ω, (*Figure 7* and *Figure 8*)		19	35	ns
t_{PLZ}	Output disable time	R_L= 110Ω, (*Figure 11* and *Figure 12*)		30	50	ns
t_{SKEW}	Differential output delay skew			1	3	ns
$t_{ZH(SHDN)}$	Driver enable from shutdown to output high			30	50	ns
$t_{ZL(SHDN)}$	Driver enable from shutdown to output low			19	35	ns

Table 11. Receiver switching characteristics

V_{CC} = 3V to 3.6V, T_A = -40 to 85°C, unless otherwise specified. Typical values are referred to T_a = 25°C)

Symbol	Parameter	Test Conditions	Min.	Typ.	Max.	Unit
t_{PLH} t_{PHL}	Propagation delay	V_{ID}= 0V to 3V, C_{L1} =15pF (*Figure 13* and *Figure 14*)		30	50	ns
t_{RPDS}	$\|t_{PLH} - t_{PHL}\|$ propagation delay skew	V_{ID}= 0V to 3V, C_{L1} = 15pF (*Figure 13* and *Figure 14*)		1	3	ns
t_{PZL}	Output enable time	C_{RL} = 15pF, (*Figure 15* and *Figure 19*)		10	20	ns
t_{PZH}	Output enable time	C_{RL} = 15pF, (*Figure 15* and *Figure 19*)		10	20	ns
t_{PHZ}	Output disable time	C_{RL} = 15pF, (*Figure 15* and *Figure 19*)		10	20	ns
t_{PLZ}	Output disable time	C_{RL} = 15pF, (*Figure 15* and *Figure 19*)		10	20	ns
$t_{ZH(SHDN)}$	Receiver enable from shutdown to output high	C_{RL} = 15pF, (*Figure 15* and *Figure 19*)		10	20	ns
$t_{ZL(SHDN)}$	Receiver enable from shutdown to output low	C_{RL} = 15pF, (*Figure 15* and *Figure 19*)		20	40	µs

Note: 1 ΔV_{OD} and ΔV_{OC} are the changes in V_{OD} and V_{OC}, respectively, when the DI input changes state.

2 Measured on $|t_{PLH}(A)-t_{PHL}(A)|$ and $|t_{PLH}(B)-t_{PHL}(B)|$

3 The transceivers are put into shutdown by bring RE high and DE low. If the input are in state for less than 80ns, the part are guaranteed not to enter shutdown. If the inputs are in this state for at least 300ns, the parts are guaranteed to have entered shutdown.

5 Test circuits and typical characteristics

Figure 3. Driver and V_{OC} test load

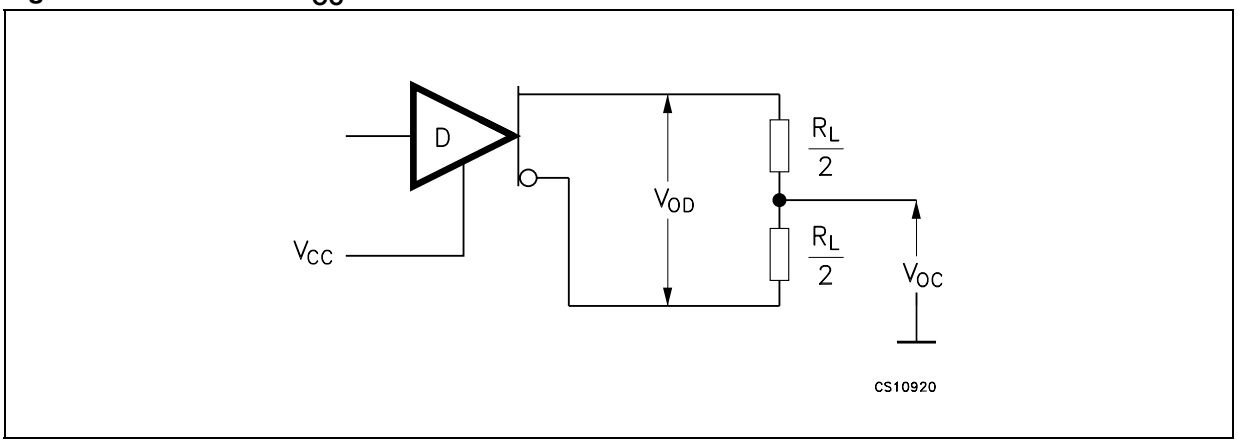

Figure 4. Driver V_{OD} with varying common mode voltage test load

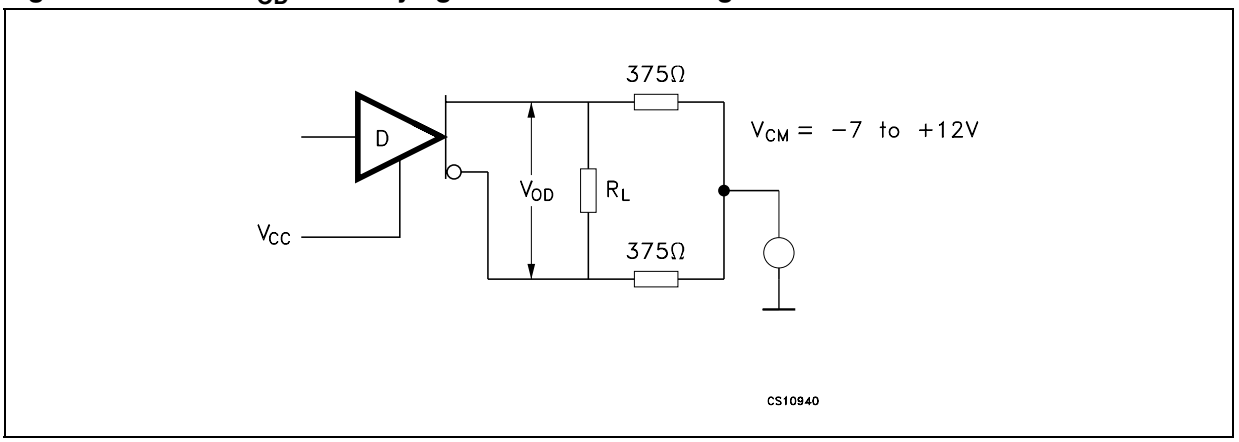

Figure 5. Receiver V_{OH} and V_{OL} test circuit

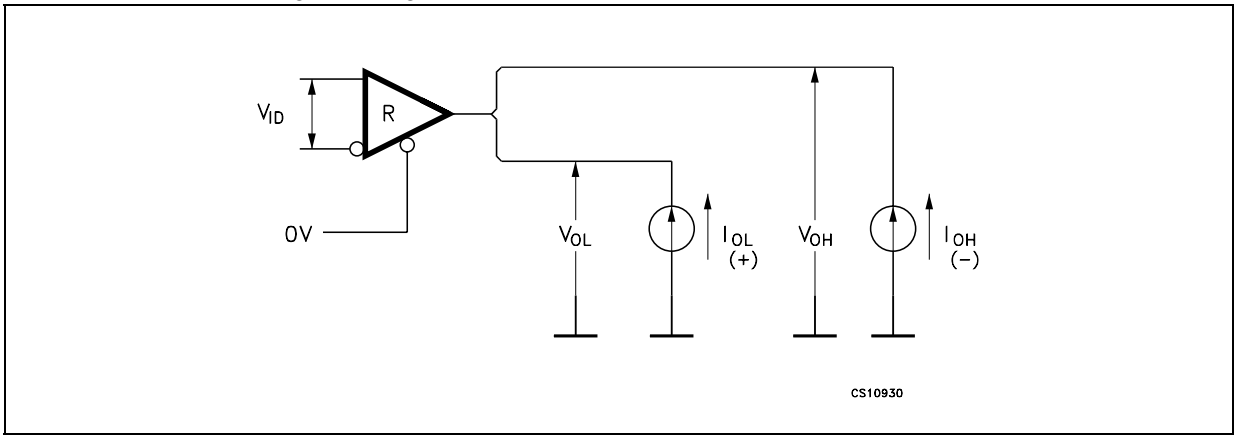

Figure 6. Drive differential output delay transition time test circuit

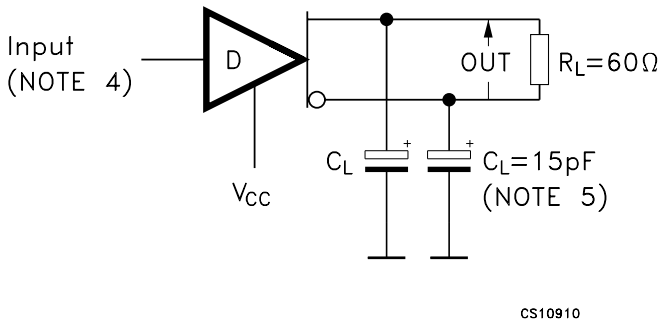

Figure 7. Drive differential output delay transition time waveform

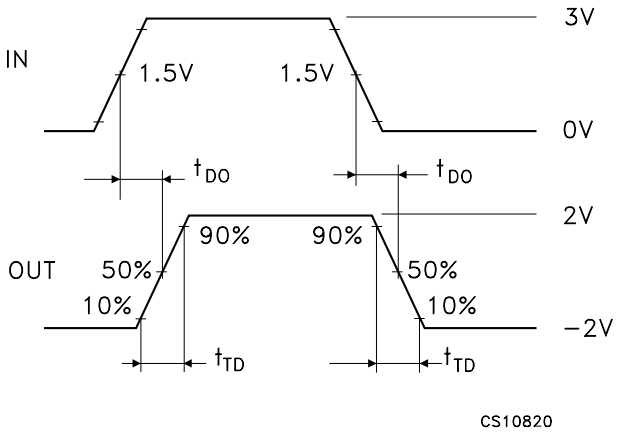

Figure 8. Drive enable and disable times test circuit

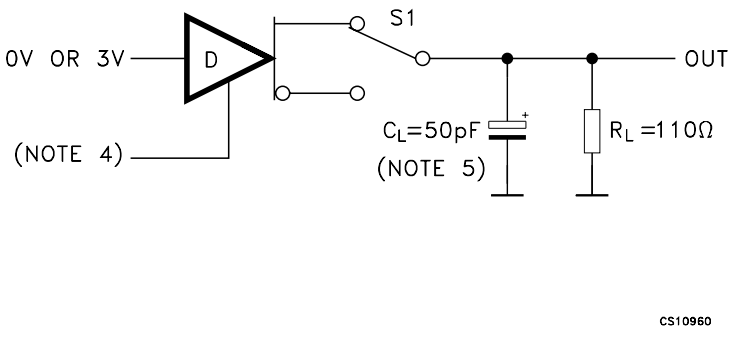

Figure 9. Drive enable and disable times waveforms

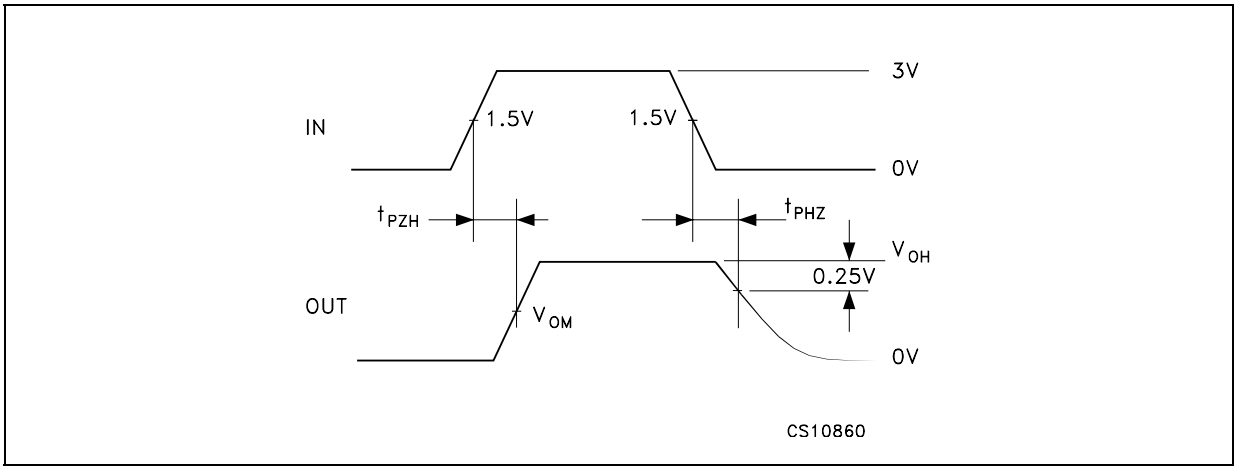

Figure 10. Drive propagation time test circuit

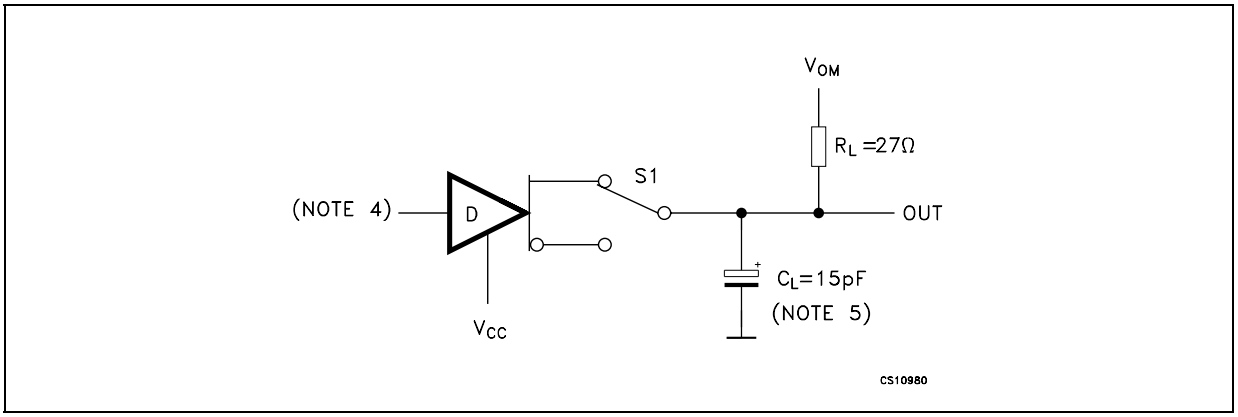

Figure 11. Drive propagation time waveform

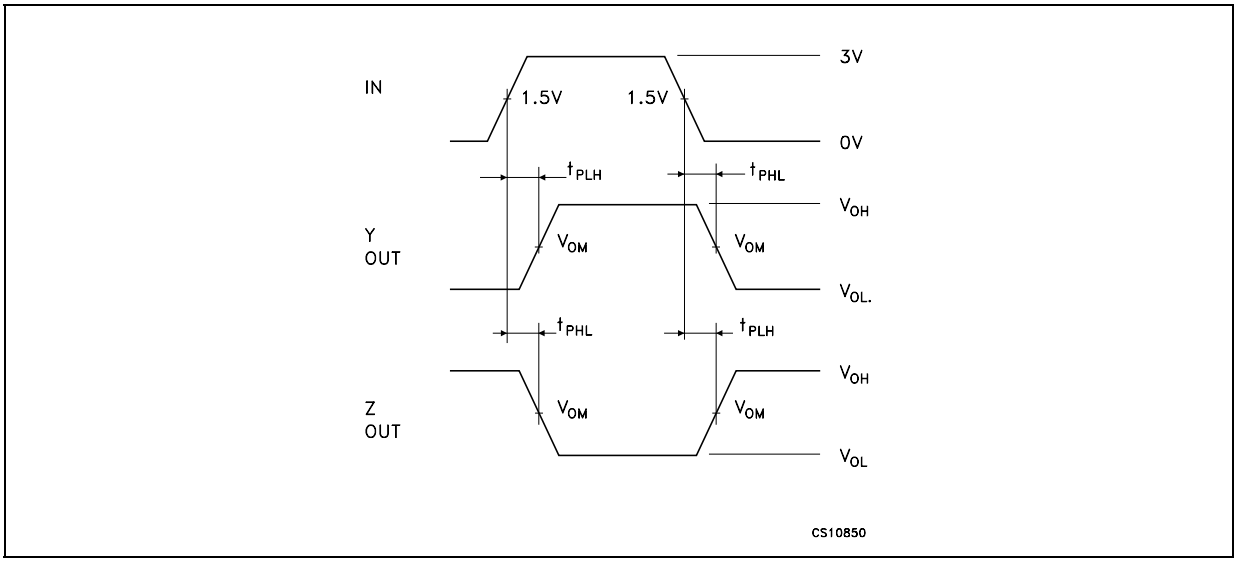

Figure 12. Drive enable and disable times test circuit

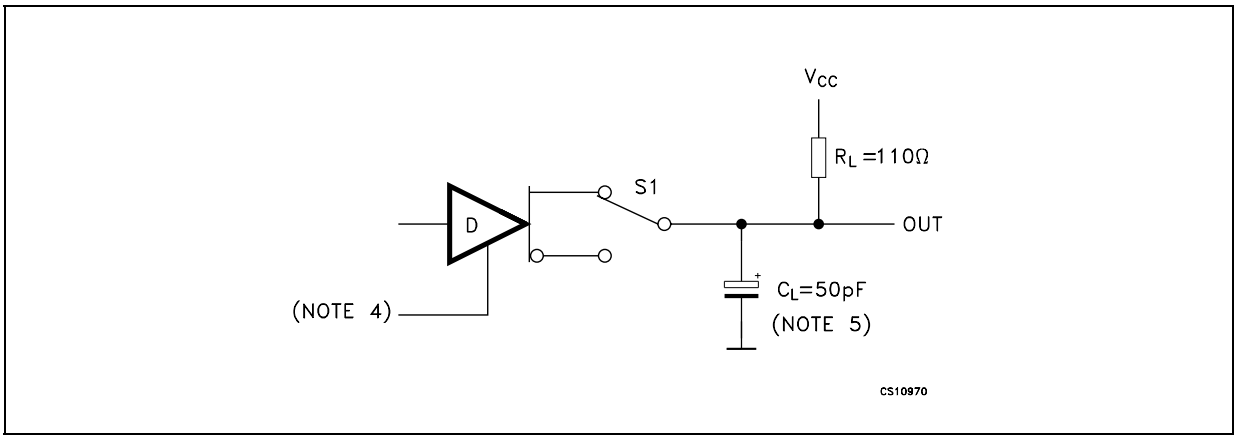

Figure 13. Drive enable and disable times waveforms

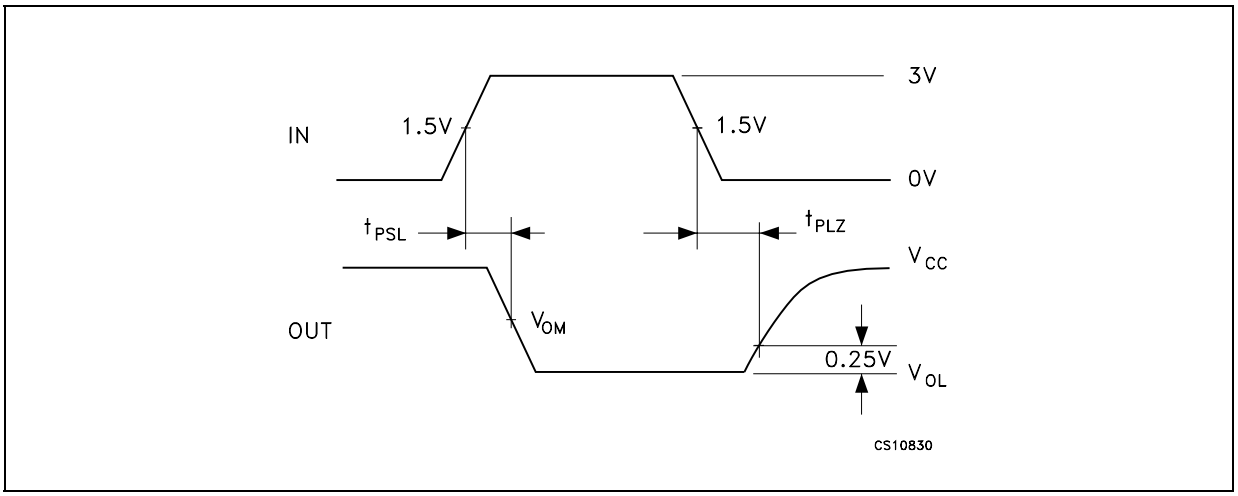

Figure 14. Receiver propagation delay time test circuit

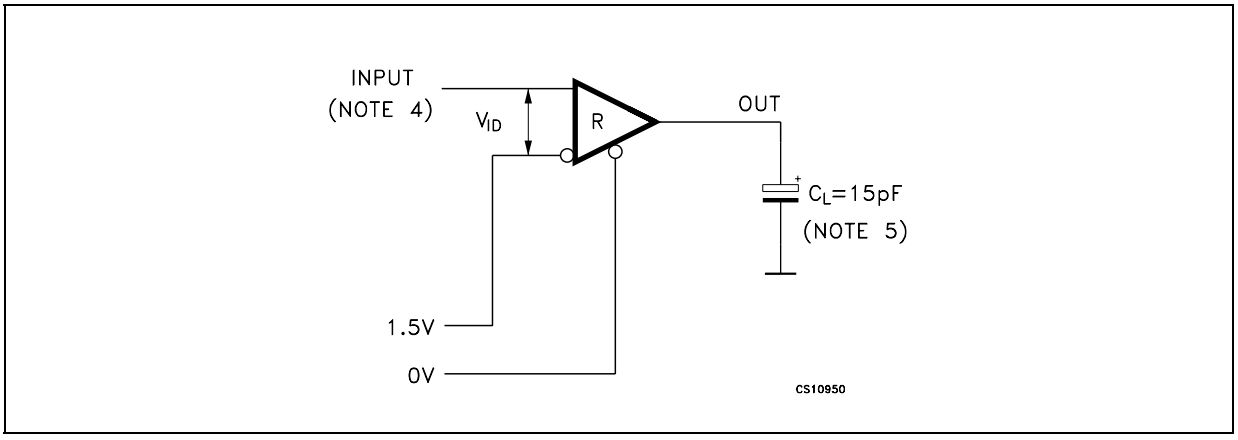

Figure 15. Receiver propagation delay time waveforms

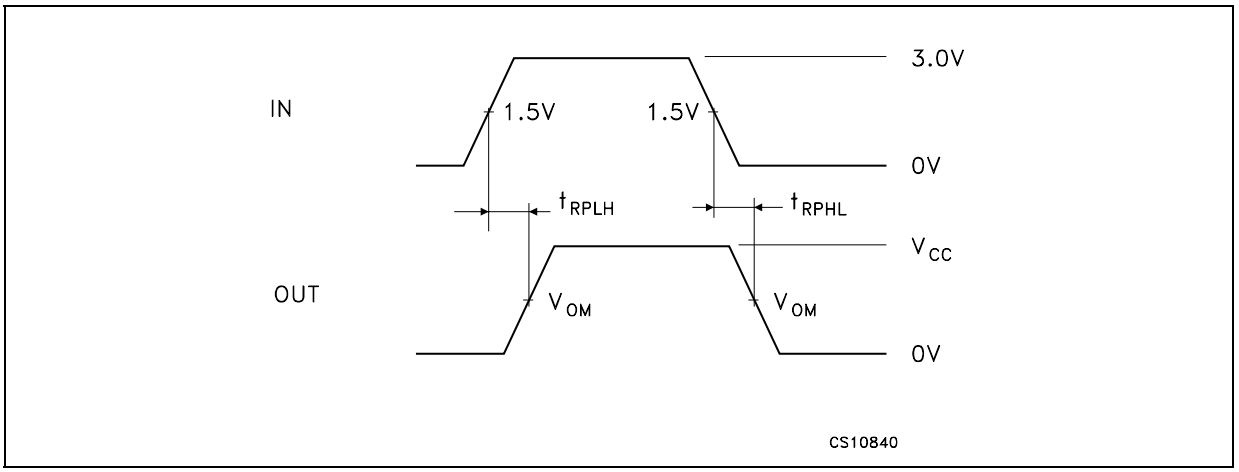

Figure 16. Receiver enable and disable times test circuit

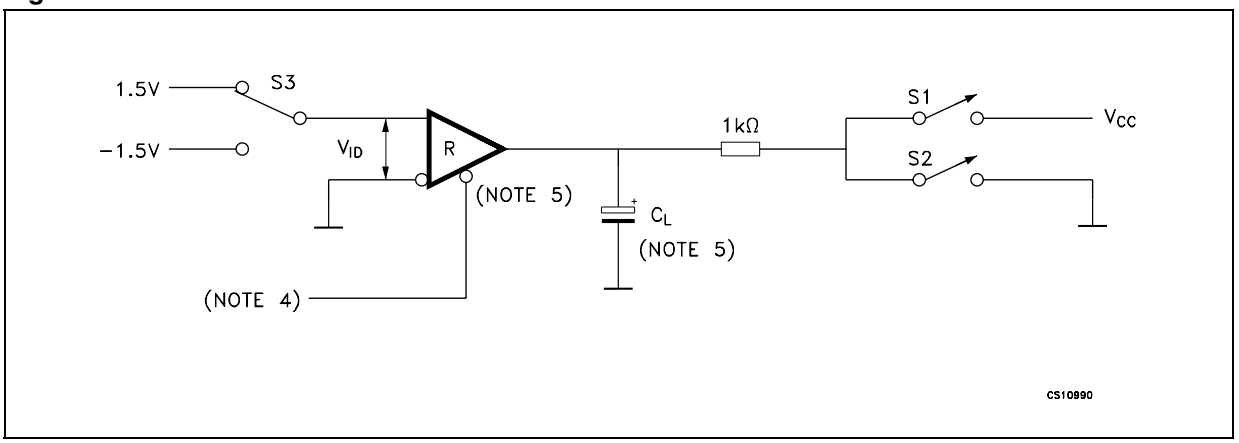

Figure 17. Receiver enable and disable times waveform

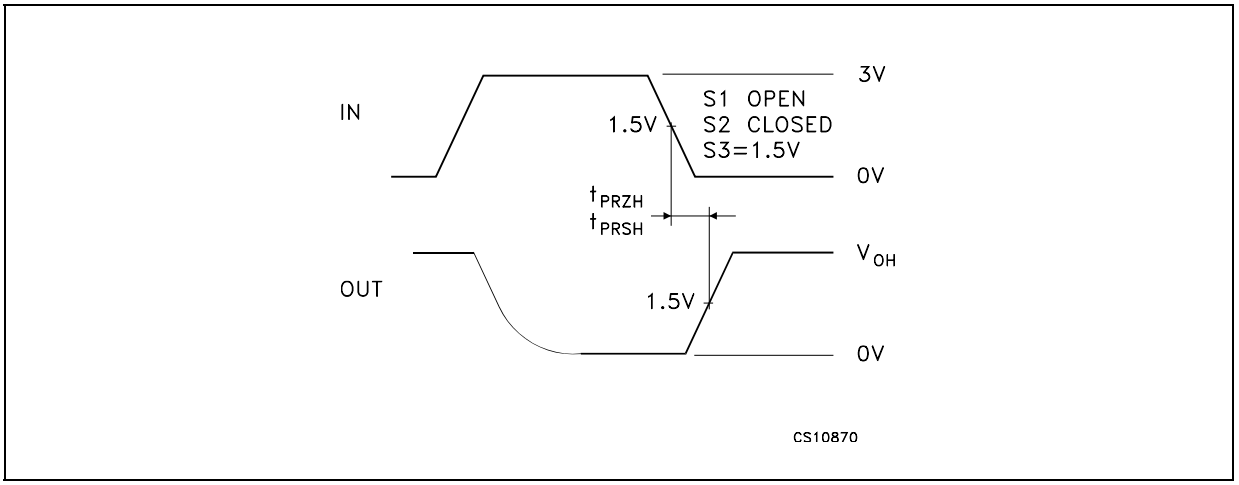

Figure 18. Receiver enable and disable times waveform

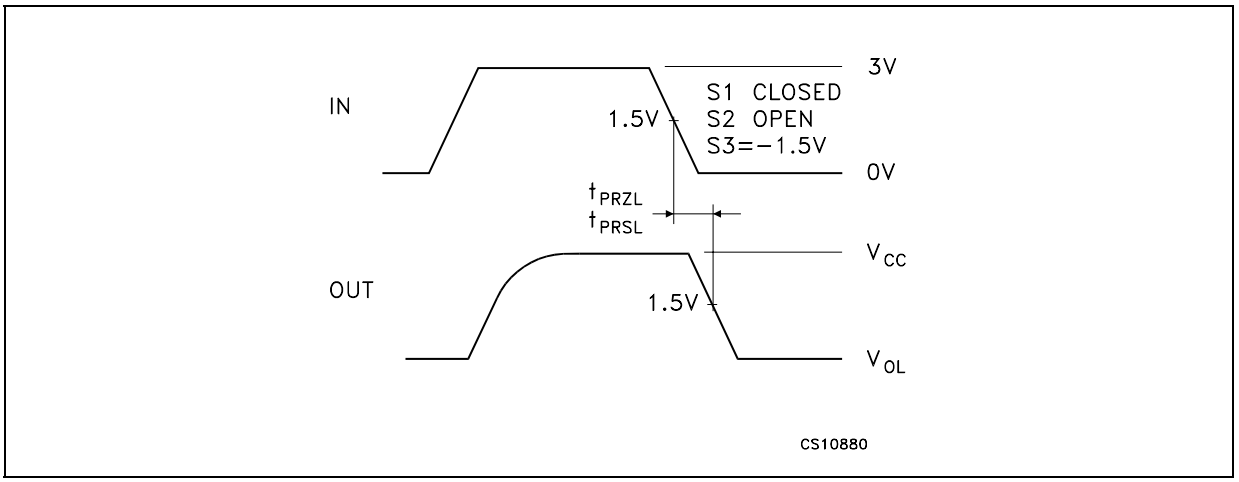

Figure 19. Receiver enable and disable times waveform

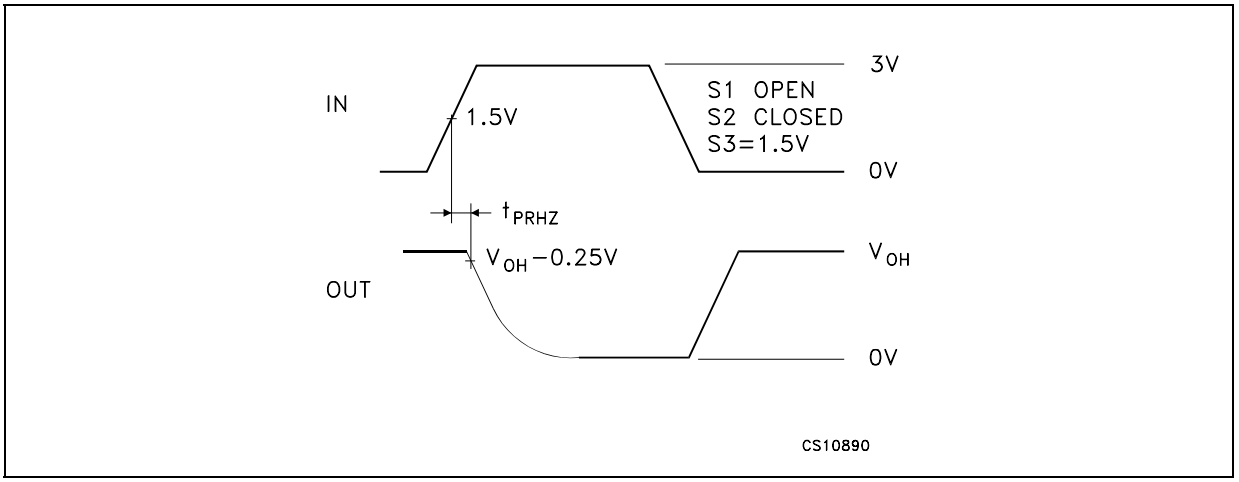

Figure 20. Receiver enable and disable times waveform

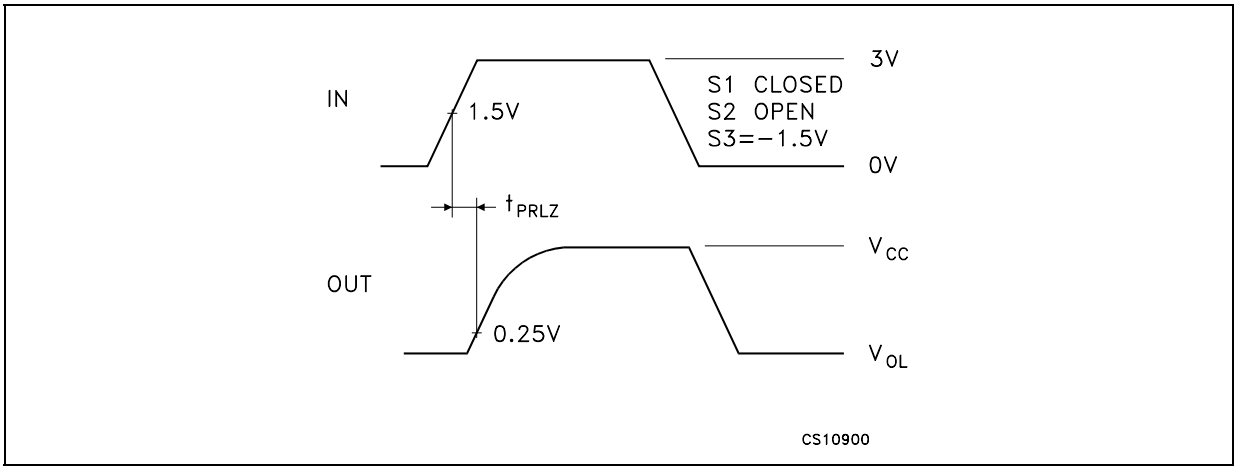

Figure 21. Receiver output current vs output low voltage

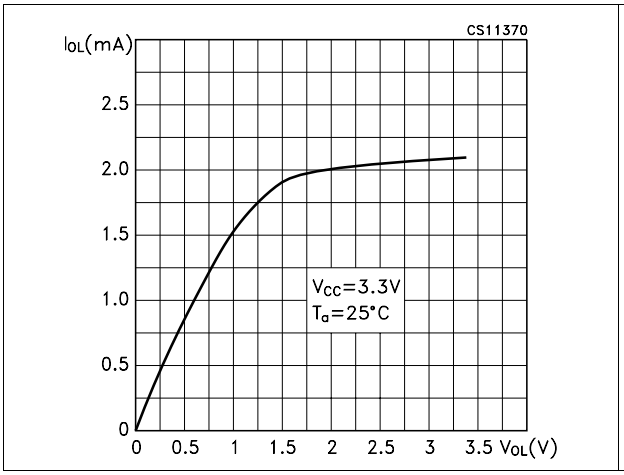

Figure 22. Receiver output current vs output high voltage

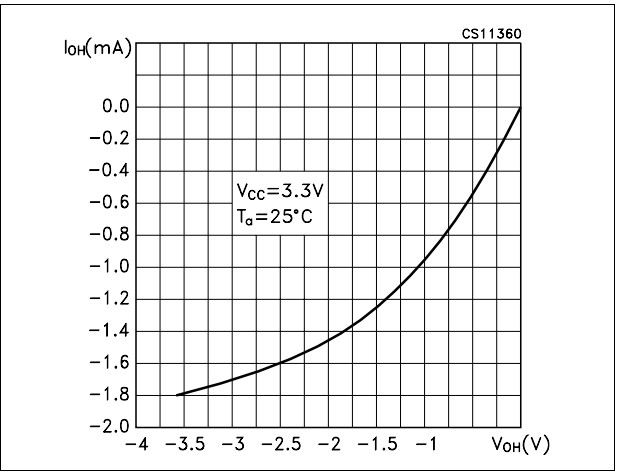

Figure 23. Low level driver output capability

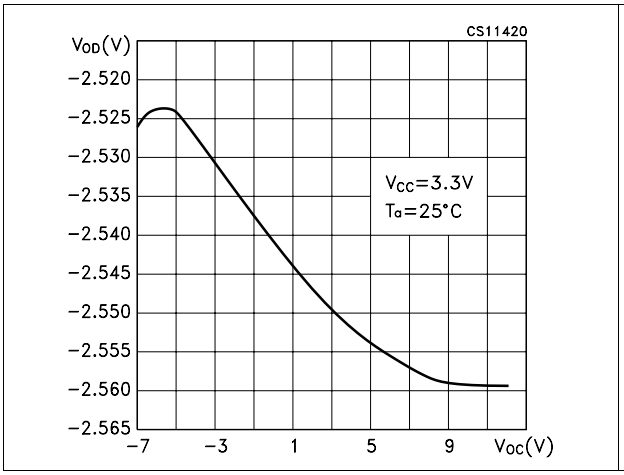

Figure 24. High level driver output capability

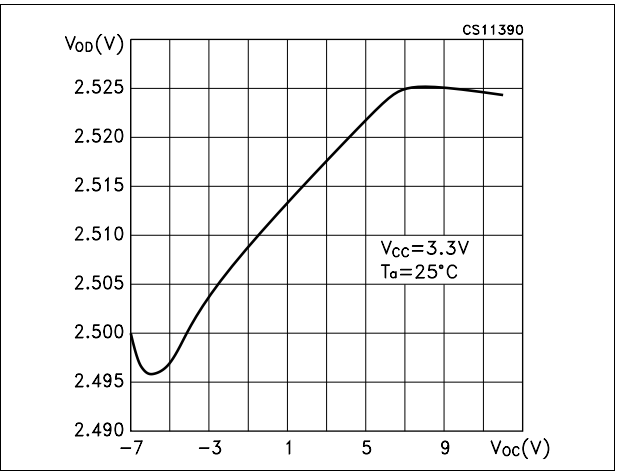

Figure 25. Receiver input characteristics

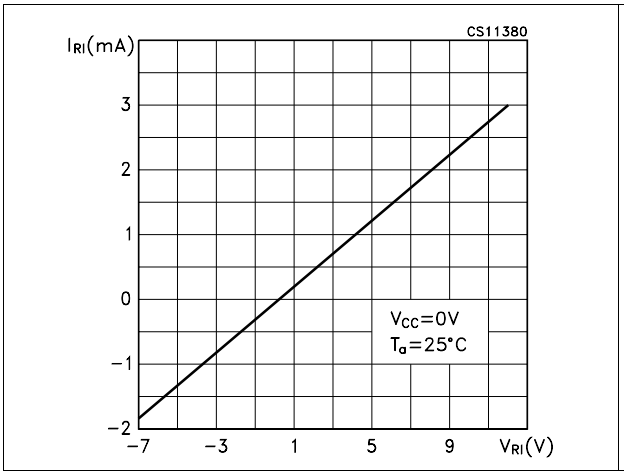

Figure 26. Driver short circuit current

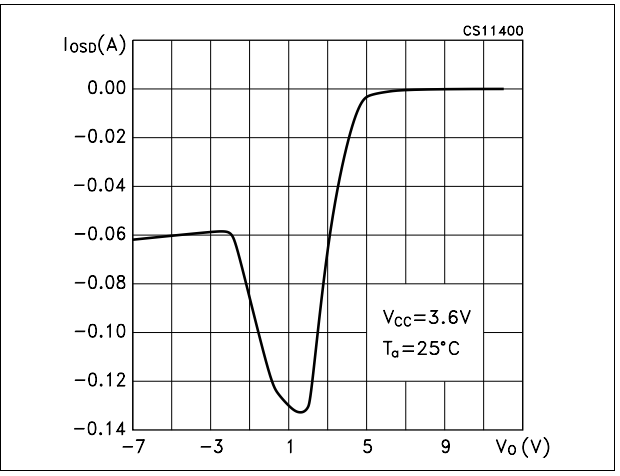

Figure 27. Driver short circuit current

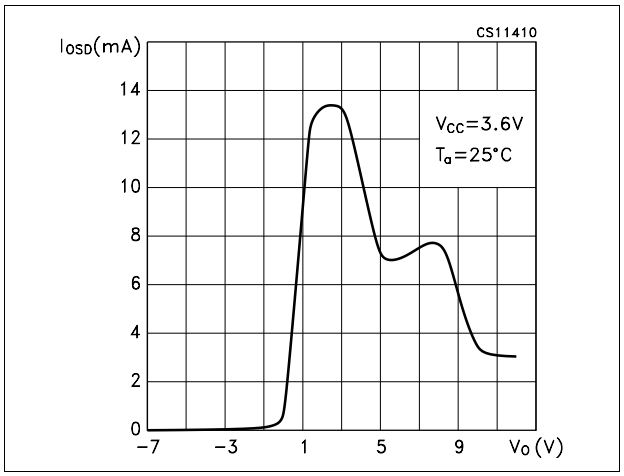

6 Package mechanical data

In order to meet environmental requirements, ST offers these devices in ECOPACK® packages. These packages have a lead-free second level interconnect. The category of second level interconnect is marked on the package and on the inner box label, in compliance with JEDEC Standard JESD97. The maximum ratings related to soldering conditions are also marked on the inner box label. ECOPACK is an ST trademark. ECOPACK specifications are available at: www.st.com

Plastic DIP-8 mechanical data

Dim.	mm.			inch.		
	Min.	Typ.	Max.	Min.	Typ.	Max.
A		3.3			0.130	
a1	0.7			0.028		
B	1.39		1.65	0.055		0.065
B1	0.91		1.04	0.036		0.041
b		0.5			0.020	
b1	0.38		0.5	0.015		0.020
D			9.8			0.386
E		8.8			0.346	
e		2.54			0.100	
e3		7.62			0.300	
e4		7.62			0.300	
F			7.1			0.280
I			4.8			0.189
L		3.3			0.130	
Z	0.44		1.6	0.017		0.063

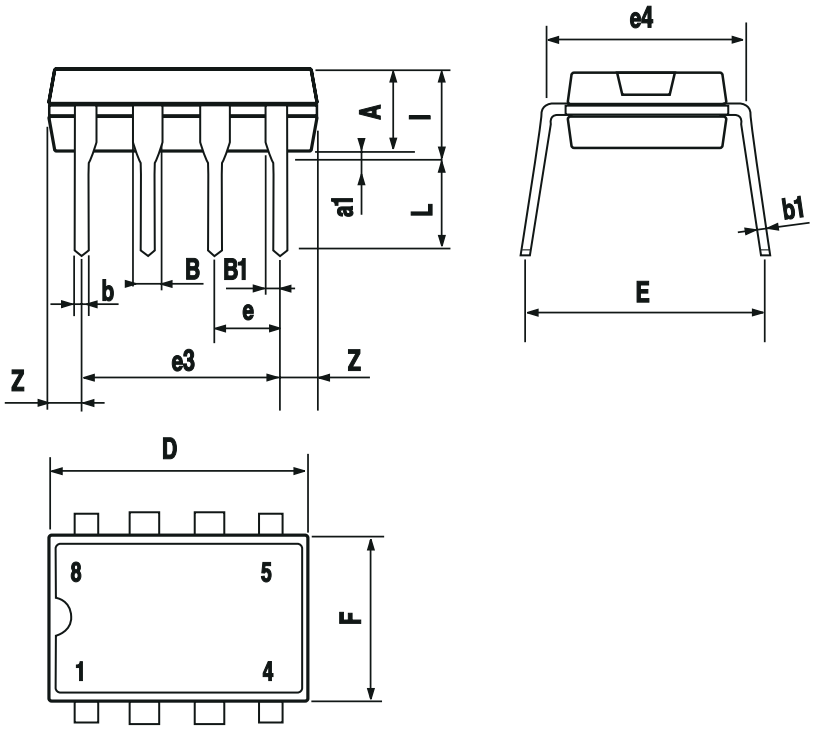

P001F

SO-8 mechanical data

Dim.	mm.			inch.		
	Min.	Typ.	Max.	Min.	Typ.	Max.
A	1.35		1.75	0.053		0.069
A1	0.10		0.25	0.04		0.010
A2	1.10		1.65	0.043		0.065
B	0.33		0.51	0.013		0.020
C	0.19		0.25	0.007		0.010
D	4.80		5.00	0.189		0.197
E	3.80		4.00	0.150		0.157
e		1.27			0.050	
H	5.80		6.20	0.228		0.244
h	0.25		0.50	0.010		0.020
L	0.40		1.27	0.016		0.050
k	8° (max.)					
ddd			0.1			0.04

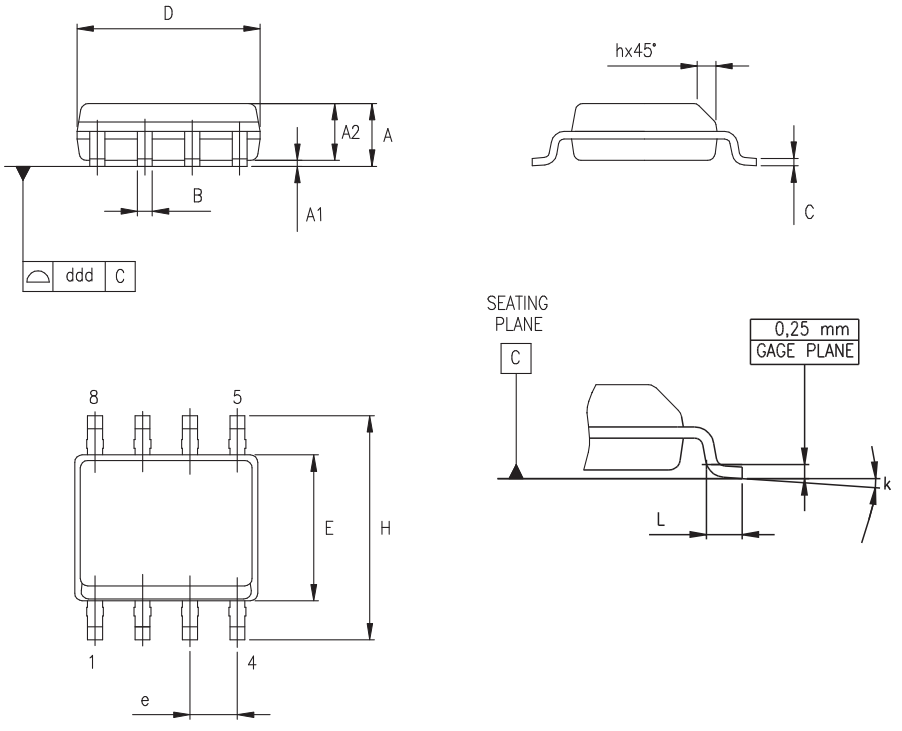

0016023/C

Tape & reel SO-8 mechanical data

Dim.	mm.			inch.		
	Min.	Typ.	Max.	Min.	Typ.	Max.
A			330			12.992
C	12.8		13.2	0.504		0.519
D	20.2			0.795		
N	60			2.362		
T			22.4			0.882
Ao	8.1		8.5	0.319		0.335
Bo	5.5		5.9	0.216		0.232
Ko	2.1		2.3	0.082		0.090
Po	3.9		4.1	0.153		0.161
P	7.9		8.1	0.311		0.319

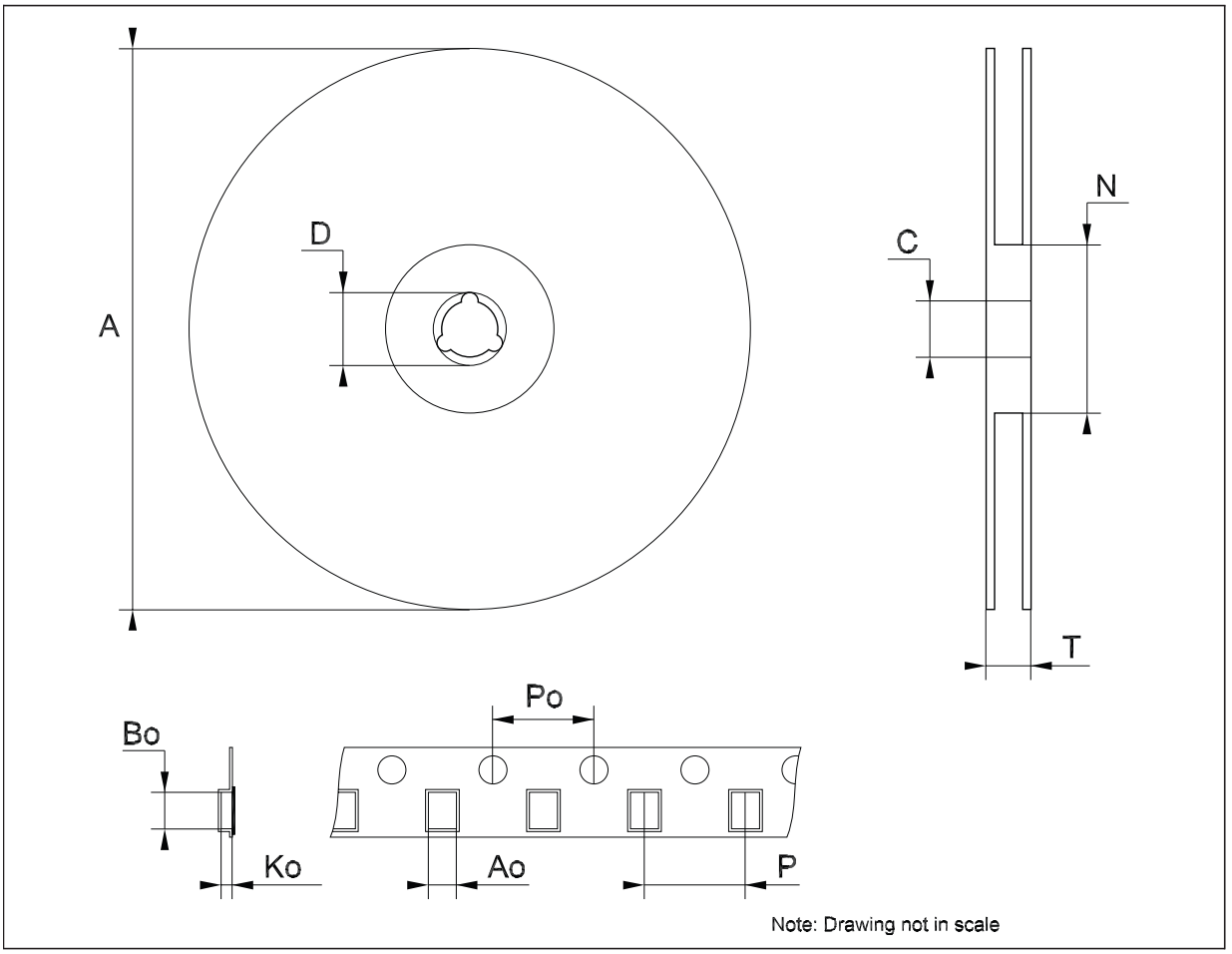

Note: Drawing not in scale

7 Revision history

Table 12. Document revision history

Date	Revision	Changes
02-May-2006	2	Order codes updated.
19-Nov-2007	3	Added *Table 1*.

Please Read Carefully:

Information in this document is provided solely in connection with ST products. STMicroelectronics NV and its subsidiaries (“ST”) reserve the right to make changes, corrections, modifications or improvements, to this document, and the products and services described herein at any time, without notice.

All ST products are sold pursuant to ST’s terms and conditions of sale.

Purchasers are solely responsible for the choice, selection and use of the ST products and services described herein, and ST assumes no liability whatsoever relating to the choice, selection or use of the ST products and services described herein.

No license, express or implied, by estoppel or otherwise, to any intellectual property rights is granted under this document. If any part of this document refers to any third party products or services it shall not be deemed a license grant by ST for the use of such third party products or services, or any intellectual property contained therein or considered as a warranty covering the use in any manner whatsoever of such third party products or services or any intellectual property contained therein.

UNLESS OTHERWISE SET FORTH IN ST’S TERMS AND CONDITIONS OF SALE ST DISCLAIMS ANY EXPRESS OR IMPLIED WARRANTY WITH RESPECT TO THE USE AND/OR SALE OF ST PRODUCTS INCLUDING WITHOUT LIMITATION IMPLIED WARRANTIES OF MERCHANTABILITY, FITNESS FOR A PARTICULAR PURPOSE (AND THEIR EQUIVALENTS UNDER THE LAWS OF ANY JURISDICTION), OR INFRINGEMENT OF ANY PATENT, COPYRIGHT OR OTHER INTELLECTUAL PROPERTY RIGHT.

UNLESS EXPRESSLY APPROVED IN WRITING BY AN AUTHORIZED ST REPRESENTATIVE, ST PRODUCTS ARE NOT RECOMMENDED, AUTHORIZED OR WARRANTED FOR USE IN MILITARY, AIR CRAFT, SPACE, LIFE SAVING, OR LIFE SUSTAINING APPLICATIONS, NOR IN PRODUCTS OR SYSTEMS WHERE FAILURE OR MALFUNCTION MAY RESULT IN PERSONAL INJURY, DEATH, OR SEVERE PROPERTY OR ENVIRONMENTAL DAMAGE. ST PRODUCTS WHICH ARE NOT SPECIFIED AS "AUTOMOTIVE GRADE" MAY ONLY BE USED IN AUTOMOTIVE APPLICATIONS AT USER’S OWN RISK.

Resale of ST products with provisions different from the statements and/or technical features set forth in this document shall immediately void any warranty granted by ST for the ST product or service described herein and shall not create or extend in any manner whatsoever, any liability of ST.

ST and the ST logo are trademarks or registered trademarks of ST in various countries.

Information in this document supersedes and replaces all information previously supplied.

The ST logo is a registered trademark of STMicroelectronics. All other names are the property of their respective owners.

© 2007 STMicroelectronics - All rights reserved

STMicroelectronics group of companies

Australia - Belgium - Brazil - Canada - China - Czech Republic - Finland - France - Germany - Hong Kong - India - Israel - Italy - Japan - Malaysia - Malta - Morocco - Singapore - Spain - Sweden - Switzerland - United Kingdom - United States of America

www.st.com