ST7LITE0xY0, ST7LITESxY0

8-bit microcontroller with single voltage Flash memory, data EEPROM, ADC, timers, SPI

- **Memories**
  - 1K or 1.5 Kbytes single voltage Flash Program memory with read-out protection, In-Circuit and In-Application Programming (ICP and IAP). 10 K write/erase cycles guaranteed, data retention: 20 years at 55 °C.
  - 128 bytes RAM.
  - 128 bytes data EEPROM with read-out protection. 300K write/erase cycles guaranteed, data retention: 20 years at 55 °C.
- **Clock, Reset and Supply Management**
  - 3-level low voltage supervisor (LVD) and auxiliary voltage detector (AVD) for safe power-on/off procedures
  - Clock sources: internal 1MHz RC 1% oscillator or external clock
  - PLL x4 or x8 for 4 or 8 MHz internal clock
  - Four Power Saving Modes: Halt, Active-Halt, Wait and Slow
- **Interrupt Management**
  - 10 interrupt vectors plus TRAP and RESET
  - 4 external interrupt lines (on 4 vectors)
- **I/O Ports**
  - 13 multifunctional bidirectional I/O lines
  - 9 alternate function lines
  - 6 high sink outputs
- **2 Timers**
  - One 8-bit Lite Timer (LT) with prescaler including: watchdog, 1 realtime base and 1 input capture.

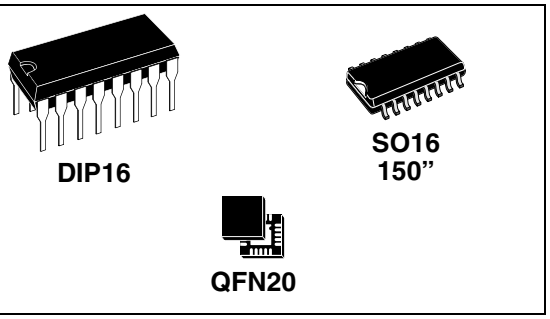

  - One 12-bit Auto-reload Timer (AT) with output compare function and PWM
- **1 Communication Interface**
  - SPI synchronous serial interface
- **A/D Converter**
  - 8-bit resolution for 0 to V_{DD}
  - Fixed gain Op-amp for 11-bit resolution in 0 to 250 mV range (@ 5V V_{DD})
  - 5 input channels
- **Instruction Set**
  - 8-bit data manipulation
  - 63 basic instructions with illegal opcode detection
  - 17 main addressing modes
  - 8 x 8 unsigned multiply instruction
- **Development Tools**
  - Full hardware/software development package

Device Summary

Features	ST7LITESxY0 (ST7SUPERLITE)		ST7LITE0xY0		
	ST7LITES2Y0	ST7LITES5Y0	ST7LITE02Y0	ST7LITE05Y0	ST7LITE09Y0
Program memory - bytes	1K	1K	1.5K	1.5K	1.5K
RAM (stack) - bytes	128 (64)	128 (64)	128 (64)	128 (64)	128 (64)
Data EEPROM - bytes	-	-	-	-	128
Peripherals	LT Timer w/ Wdg, AT Timer w/ 1 PWM, SPI	LT Timer w/ Wdg, AT Timer w/ 1 PWM, SPI, 8-bit ADC	LT Timer w/ Wdg, AT Timer w/ 1 PWM, SPI	LT Timer w/ Wdg, AT Timer w/ 1 PWM, SPI, 8-bit ADC w/ Op-Amp	
Operating Supply	2.4V to 5.5V				
CPU Frequency	1MHz RC 1% + PLLx4/8MHz				
Operating Temperature	-40°C to +85°C				
Packages	SO16 150”, DIP16, QFN20				

Rev 6

Table of Contents

ST7LITE0xY0, ST7LITESxY0 1

1 DESCRIPTION 5
2 PIN DESCRIPTION 6
3 REGISTER & MEMORY MAP 9
4 FLASH PROGRAM MEMORY 13
4.1 INTRODUCTION 13
4.2 MAIN FEATURES 13
4.3 PROGRAMMING MODES 13
4.4 ICC INTERFACE 14
4.5 MEMORY PROTECTION 15
4.6 RELATED DOCUMENTATION 15
4.7 REGISTER DESCRIPTION 15
5 DATA EEPROM 16
5.1 INTRODUCTION 16
5.2 MAIN FEATURES 16
5.3 MEMORY ACCESS 17
5.4 POWER SAVING MODES 19
5.5 ACCESS ERROR HANDLING 19
5.6 DATA EEPROM READ-OUT PROTECTION 19
5.7 REGISTER DESCRIPTION 20
6 CENTRAL PROCESSING UNIT 21
6.1 INTRODUCTION 21
6.2 MAIN FEATURES 21
6.3 CPU REGISTERS 21
7 SUPPLY, RESET AND CLOCK MANAGEMENT 24
7.1 INTERNAL RC OSCILLATOR ADJUSTMENT 24
7.2 PHASE LOCKED LOOP 24
7.3 REGISTER DESCRIPTION 25
7.4 RESET SEQUENCE MANAGER (RSM) 27
8 INTERRUPTS 29
8.1 NON MASKABLE SOFTWARE INTERRUPT 29
8.2 EXTERNAL INTERRUPTS 29
8.3 PERIPHERAL INTERRUPTS 29
8.4 SYSTEM INTEGRITY MANAGEMENT (SI) 32
9 POWER SAVING MODES 37
9.1 INTRODUCTION 37
9.2 SLOW MODE 37
9.3 WAIT MODE 38
9.4 ACTIVE-HALT AND HALT MODES 39

Table of Contents

10 I/O PORTS 42
10.1 INTRODUCTION 42
10.2 FUNCTIONAL DESCRIPTION 42
10.3 UNUSED I/O PINS 46
10.4 LOW POWER MODES 46
10.5 INTERRUPTS 46
10.6 I/O PORT IMPLEMENTATION 46
11 ON-CHIP PERIPHERALS 48
11.1 LITE TIMER (LT) 48
11.2 12-BIT AUTORELOAD TIMER (AT) 53
11.3 SERIAL PERIPHERAL INTERFACE (SPI) 59
11.4 8-BIT A/D CONVERTER (ADC) 70
12 INSTRUCTION SET 75
12.1 ST7 ADDRESSING MODES 75
12.2 INSTRUCTION GROUPS 78
13 ELECTRICAL CHARACTERISTICS 81
13.1 PARAMETER CONDITIONS 81
13.2 ABSOLUTE MAXIMUM RATINGS 82
13.3 OPERATING CONDITIONS 83
13.4 SUPPLY CURRENT CHARACTERISTICS 89
13.5 CLOCK AND TIMING CHARACTERISTICS 91
13.6 MEMORY CHARACTERISTICS 92
13.7 EMC (ELECTROMAGNETIC COMPATIBILITY) CHARACTERISTICS 93
13.8 I/O PORT PIN CHARACTERISTICS 95
13.9 CONTROL PIN CHARACTERISTICS 100
13.10 COMMUNICATION INTERFACE CHARACTERISTICS 102
13.11 8-BIT ADC CHARACTERISTICS 104
14 PACKAGE CHARACTERISTICS 109
14.1 PACKAGE MECHANICAL DATA 109
14.2 THERMAL CHARACTERISTICS 111
15 DEVICE CONFIGURATION AND ORDERING INFORMATION 112
15.1 OPTION BYTES 112
15.2 DEVICE ORDERING INFORMATION AND TRANSFER OF CUSTOMER CODE 114
15.3 DEVELOPMENT TOOLS 117
15.4 ST7 APPLICATION NOTES 118
16 KNOWN LIMITATIONS 121
16.1 EXECUTION OF BTJX INSTRUCTION 121
16.2 IN-CIRCUIT PROGRAMMING OF DEVICES PREVIOUSLY PROGRAMMED WITH HARDWARE WATCHDOG OPTION 121
16.3 IN-CIRCUIT DEBUGGING WITH HARDWARE WATCHDOG 121
16.4 RECOMMENDATIONS WHEN LVD IS ENABLED 121
16.5 CLEARING ACTIVE INTERRUPTS OUTSIDE INTERRUPT ROUTINE 121
17 REVISION HISTORY 122

Table of Contents

To obtain the most recent version of this datasheet,
please check at www.st.com

Please also pay special attention to the Section “KNOWN LIMITATIONS” on page 121.

1 DESCRIPTION

The ST7LITE0x and ST7SUPERLITE (ST7LITESx) are members of the ST7 microcontroller family. All ST7 devices are based on a common industry-standard 8-bit core, featuring an enhanced instruction set.

The ST7LITE0x and ST7SUPERLITE feature FLASH memory with byte-by-byte In-Circuit Programming (ICP) and In-Application Programming (IAP) capability.

Under software control, the ST7LITE0x and ST7SUPERLITE devices can be placed in WAIT, SLOW, or HALT mode, reducing power consumption when the application is in idle or standby state.

The enhanced instruction set and addressing modes of the ST7 offer both power and flexibility to software developers, enabling the design of highly efficient and compact application code. In addition to standard 8-bit data management, all ST7 microcontrollers feature true bit manipulation, 8x8 unsigned multiplication and indirect addressing modes.

For easy reference, all parametric data are located in .

Figure 1. General Block Diagram

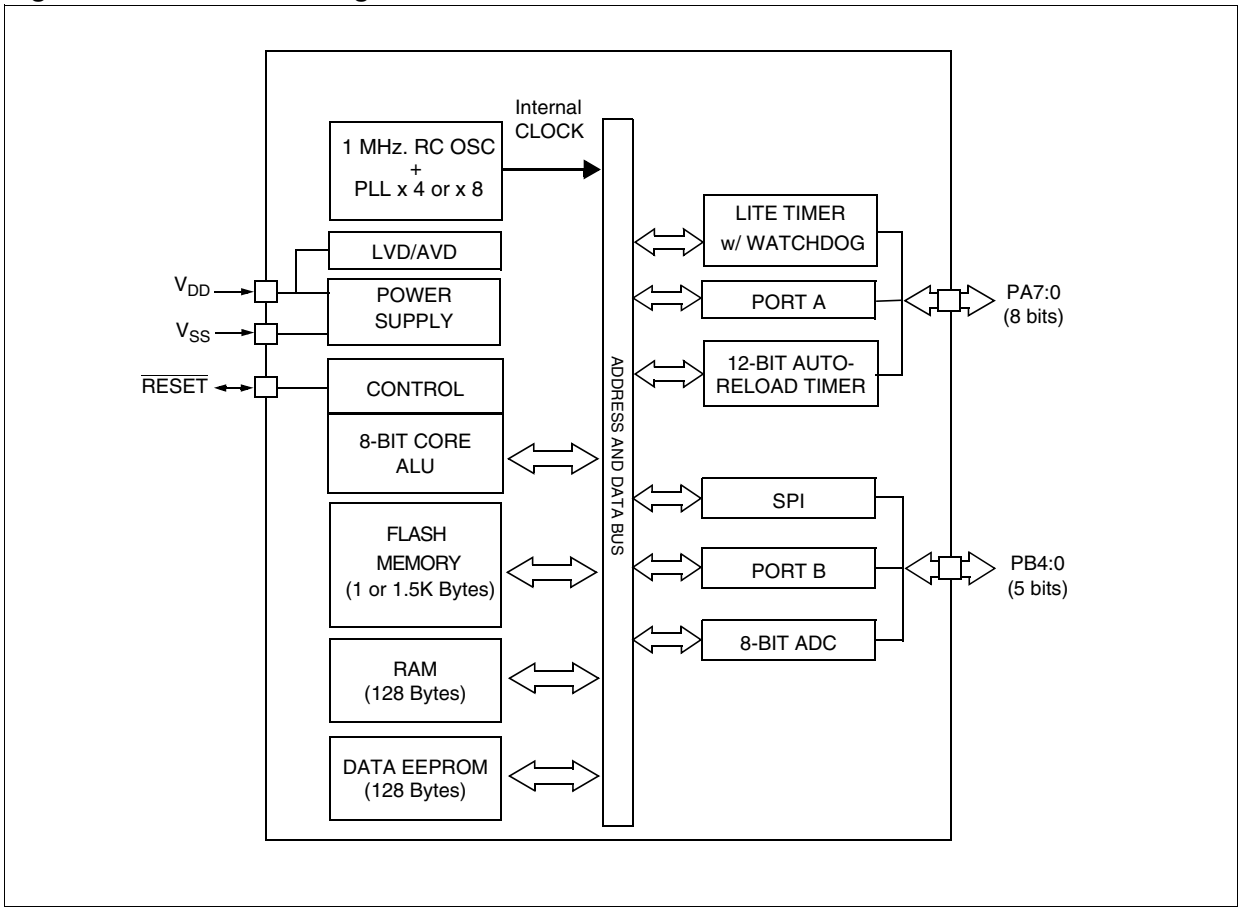

2 PIN DESCRIPTION

Figure 2. 20-Pin QFN Package Pinout

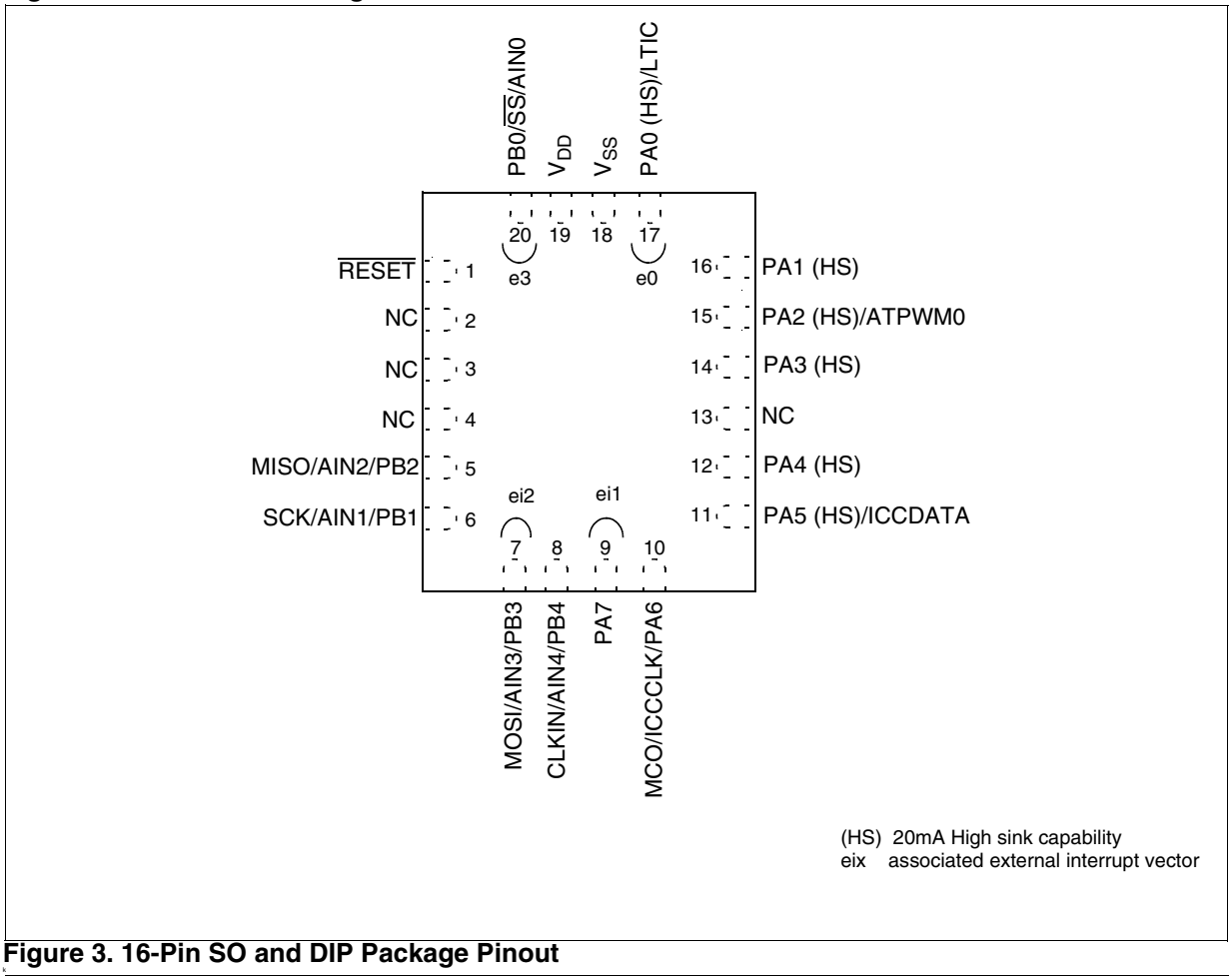

Figure 3. 16-Pin SO and DIP Package Pinout

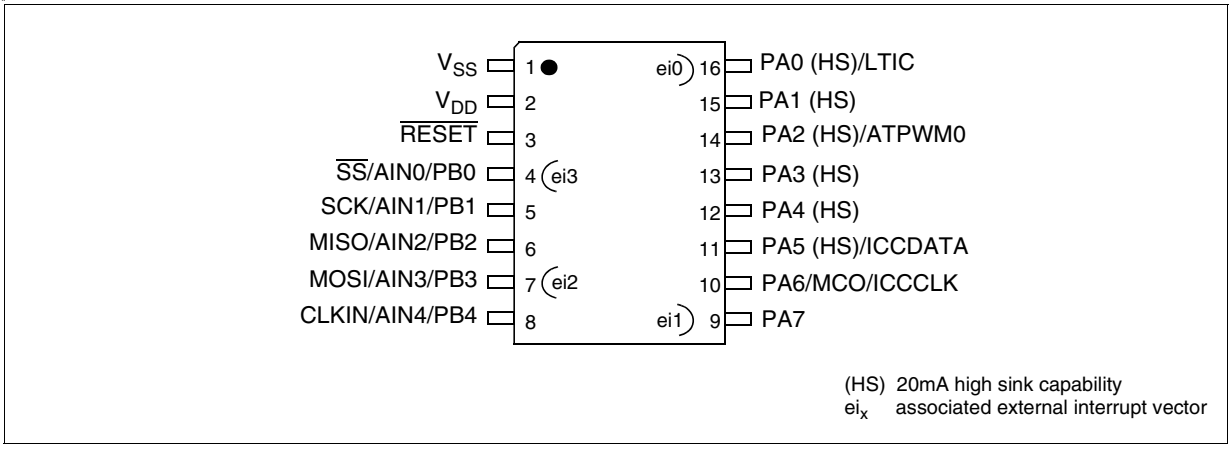

PIN DESCRIPTION (Cont'd)

Legend / Abbreviations for :

Type: I = input, O = output, S = supply

In/Output level: C= CMOS $0.15V_{DD}/0.85V_{DD}$ with input trigger

C_T= CMOS $0.3V_{DD}/0.7V_{DD}$ with input trigger

Output level: HS = 20mA high sink (on N-buffer only)

Port and control configuration:

– Input: float = floating, wpu = weak pull-up, int = interrupt [1)], ana = analog

– Output: OD = open drain, PP = push-pull

Table 1. Device Pin Description

Pin n°		Pin Name	Type	Level		Port / Control						Main Function (after reset)	Alternate Function
						Input				Output			
QFN20	SO16/DIP16			Input	Output	float	wpu	int	ana	OD	PP		
18	1	V_{SS}	S									Ground	
19	2	V_{DD}	S									Main power supply	
1	3	$\overline{RESET}$	I/O	C_T			X			X		Top priority non maskable interrupt (active low)	
20	4	PB0/AIN0/$\overline{SS}$	I/O	C_T		**X**	ei3		X	X	X	**Port B0**	ADC Analog Input 0 or SPI Slave Select (active low)
6	5	PB1/AIN1/SCK	I/O	C_T		**X**	X		X	X	X	**Port B1**	ADC Analog Input 1 or SPI Clock **Caution:** No negative current injection allowed on this pin. For details, refer to page 82
5	6	PB2/AIN2/MISO	I/O	C_T		**X**	X		X	X	X	**Port B2**	ADC Analog Input 2 or SPI Master In/ Slave Out Data
7	7	PB3/AIN3/MOSI	I/O	C_T		**X**	ei2		X	X	X	**Port B3**	ADC Analog Input 3 or SPI Master Out / Slave In Data
8	8	PB4/AIN4/CLKIN	I/O	C_T		**X**	X		X	X	X	**Port B4**	ADC Analog Input 4 or External clock input
9	9	PA7	I/O	C_T		**X**	ei1			X	X	**Port A7**	
10	10	PA6 /MCO/ ICCCLK	I/O	C_T		X	**X**			X	X	**Port A6**	Main Clock Output/In Circuit Communication Clock. **Caution:** During normal operation this pin must be pulled- up, internally or externally (external pull-up of 10k mandatory in noisy environment). This is to avoid entering ICC mode unexpectedly during a reset. In the application, even if the pin is configured as output, any reset will put it back in input pull-up
11	11	PA5/ ICCDATA	I/O	C_T	HS	**X**	X			X	X	**Port A5**	In Circuit Communication Data
12	12	PA4	I/O	C_T	HS	**X**	X			X	X	**Port A4**	
14	13	PA3	I/O	C_T	HS	**X**	X			X	X	**Port A3**	

Pin n°		Pin Name	Type	Level		Port / Control						Main Function (after reset)	Alternate Function
						Input				Output			
QFN20	SO16/DIP16			Input	Output	float	wpu	int	ana	OD	PP		
15	14	PA2/ATPWM0	I/O	C_T	HS	**X**	X			X	X	**Port A2**	Auto-Reload Timer PWM0
16	15	PA1	I/O	C_T	HS	**X**	X			X	X	**Port A1**	
17	16	PA0/LTIC	I/O	C_T	HS	**X**	ei0			X	X	**Port A0**	Lite Timer Input Capture

Note:

In the interrupt input column, “ei_x” defines the associated external interrupt vector. If the weak pull-up column (wpu) is merged with the interrupt column (int), then the I/O configuration is pull-up interrupt input, else the configuration is floating interrupt input.

3 REGISTER & MEMORY MAP

As shown in and , the MCU is capable of addressing 64K bytes of memories and I/O registers.

The available memory locations consist of up to 128 bytes of register locations, 128 bytes of RAM, 128 bytes of data EEPROM and up to 1.5 Kbytes of user program memory. The RAM space includes up to 64 bytes for the stack from 0C0h to 0FFh.

The highest address bytes contain the user reset and interrupt vectors.

The size of Flash Sector 0 is configurable by Option byte.

IMPORTANT: Memory locations marked as “Reserved” must never be accessed. Accessing a reserved area can have unpredictable effects on the device.

Figure 4. Memory Map (ST7LITE0x)

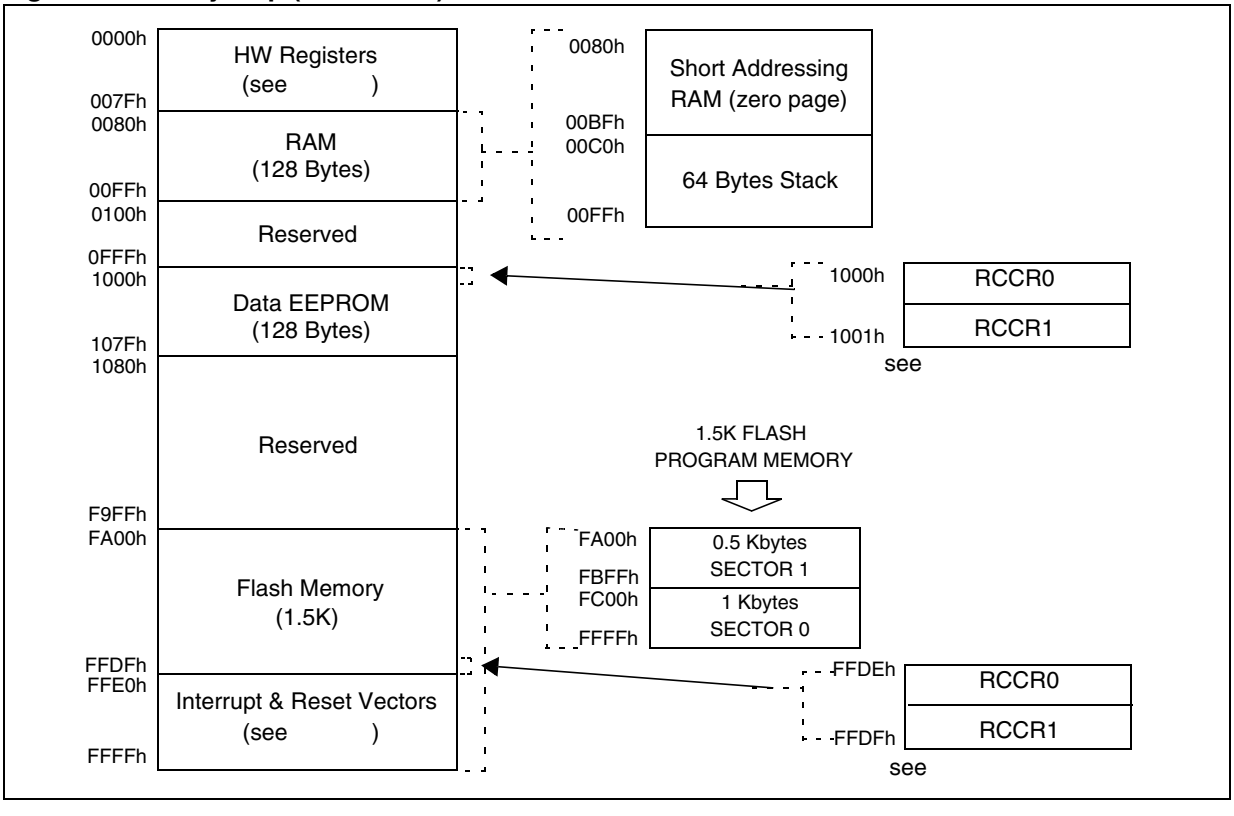

REGISTER AND MEMORY MAP (Cont'd)

Figure 5. Memory Map (ST7SUPERLITE)

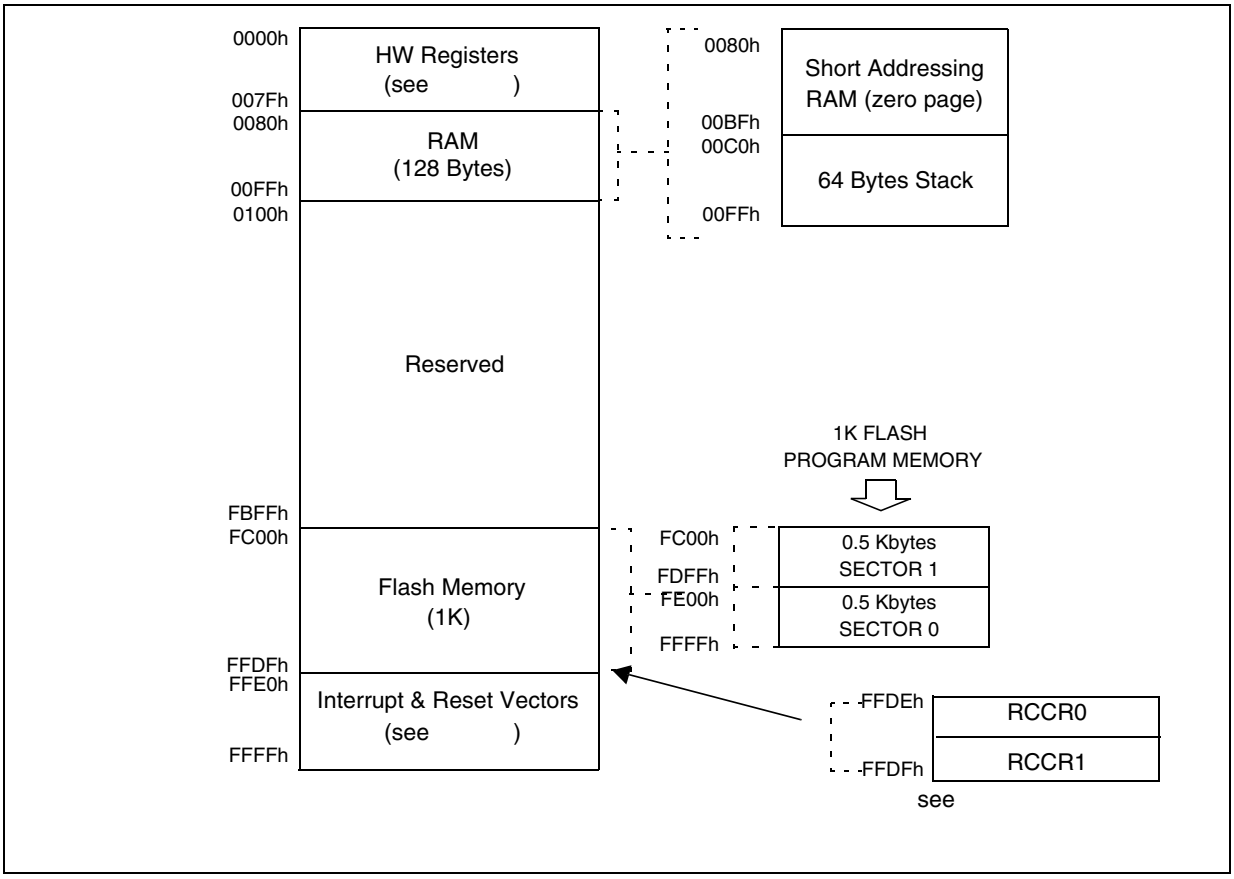

REGISTER AND MEMORY MAP (Cont'd)

Legend: x=undefined, R/W=read/write

Table 2. Hardware Register Map

Address	Block	Register Label	Register Name	Reset Status	Remarks
0000h 0001h 0002h	Port A	PADR PADDR PAOR	Port A Data Register Port A Data Direction Register Port A Option Register	00h[1)] 00h 40h	R/W R/W R/W
0003h 0004h 0005h	Port B	PBDR PBDDR PBOR	Port B Data Register Port B Data Direction Register Port B Option Register	E0h [1)] 00h 00h	R/W R/W R/W[2)]
0006h to 000Ah	Reserved area (5 bytes)				
000Bh 000Ch	LITE TIMER	LTCSR LTICR	Lite Timer Control/Status Register Lite Timer Input Capture Register	xxh xxh	R/W Read Only
000Dh 000Eh 000Fh 0010h 0011h 0012h 0013h	AUTO-RELOAD TIMER	ATCSR CNTRH CNTRL ATRH ATRL PWMCR PWM0CSR	Timer Control/Status Register Counter Register High Counter Register Low Auto-Reload Register High Auto-Reload Register Low PWM Output Control Register PWM 0 Control/Status Register	00h 00h 00h 00h 00h 00h 00h	R/W Read Only Read Only R/W R/W R/W R/W
0014h to 0016h	Reserved area (3 bytes)				
0017h 0018h	AUTO-RELOAD TIMER	DCR0H DCR0L	PWM 0 Duty Cycle Register High PWM 0 Duty Cycle Register Low	00h 00h	R/W R/W
0019h to 002Eh	Reserved area (22 bytes)				
0002Fh	FLASH	FCSR	Flash Control/Status Register	00h	R/W
00030h	EEPROM	EECSR	Data EEPROM Control/Status Register	00h	R/W
0031h 0032h 0033h	SPI	SPIDR SPICR SPICSR	SPI Data I/O Register SPI Control Register SPI Control/Status Register	xxh 0xh 00h	R/W R/W R/W
0034h 0035h 0036h	ADC	ADCCSR ADCDR ADCAMP	A/D Control Status Register A/D Data Register A/D Amplifier Control Register	00h 00h 00h	R/W Read Only R/W
0037h	ITC	EICR	External Interrupt Control Register	00h	R/W
0038h 0039h	CLOCKS	MCCSR RCCR	Main Clock Control/Status Register RC oscillator Control Register	00h FFh	R/W R/W

Address	Block	Register Label	Register Name	Reset Status	Remarks
003Ah	SI	SICSR	System Integrity Control/Status Register	0xh	R/W
003Bh to 007Fh	Reserved area (69 bytes)				

Notes:

1. The contents of the I/O port DR registers are readable only in output configuration. In input configuration, the values of the I/O pins are returned instead of the DR register contents.

2. The bits associated with unavailable pins must always keep their reset value.

4 FLASH PROGRAM MEMORY

4.1 Introduction

The ST7 single voltage extended Flash (XFlash) is a non-volatile memory that can be electrically erased and programmed either on a byte-by-byte basis or up to 32 bytes in parallel.

The XFlash devices can be programmed off-board (plugged in a programming tool) or on-board using In-Circuit Programming or In-Application Programming.

The array matrix organisation allows each sector to be erased and reprogrammed without affecting other sectors.

4.2 Main Features

- ICP (In-Circuit Programming)
- IAP (In-Application Programming)
- ICT (In-Circuit Testing) for downloading and executing user application test patterns in RAM
- Sector 0 size configurable by option byte
- Read-out and write protection

4.3 PROGRAMMING MODES

The ST7 can be programmed in three different ways:

– Insertion in a programming tool. In this mode, FLASH sectors 0 and 1, option byte row and data EEPROM can be programmed or erased.
– In-Circuit Programming. In this mode, FLASH sectors 0 and 1, option byte row and data EEPROM can be programmed or erased without removing the device from the application board.
– In-Application Programming. In this mode, sector 1 and data EEPROM can be programmed or erased without removing the device from the application board and while the application is running.

4.3.1 In-Circuit Programming (ICP)

ICP uses a protocol called ICC (In-Circuit Communication) which allows an ST7 plugged on a printed circuit board (PCB) to communicate with an external programming device connected via cable. ICP is performed in three steps:

Switch the ST7 to ICC mode (In-Circuit Communications). This is done by driving a specific signal sequence on the ICCCLK/DATA pins while the RESET pin is pulled low. When the ST7 enters ICC mode, it fetches a specific RESET vector which points to the ST7 System Memory containing the ICC protocol routine. This routine enables the ST7 to receive bytes from the ICC interface.

– Download ICP Driver code in RAM from the ICCDATA pin
– Execute ICP Driver code in RAM to program the FLASH memory

Depending on the ICP Driver code downloaded in RAM, FLASH memory programming can be fully customized (number of bytes to program, program locations, or selection of the serial communication interface for downloading).

4.3.2 In Application Programming (IAP)

This mode uses an IAP Driver program previously programmed in Sector 0 by the user (in ICP mode).

This mode is fully controlled by user software. This allows it to be adapted to the user application, (user-defined strategy for entering programming mode, choice of communications protocol used to fetch the data to be stored etc.)
IAP mode can be used to program any memory areas except Sector 0, which is write/erase protected to allow recovery in case errors occur during the programming operation.

FLASH PROGRAM MEMORY (Cont'd)

4.4 ICC interface

ICP needs a minimum of 4 and up to 6 pins to be connected to the programming tool. These pins are:

- $\overline{\text{RESET}}$: device reset
- V_{SS}: device power supply ground
- ICCCLK: ICC output serial clock pin
- ICCDATA: ICC input serial data pin
- CLKIN: main clock input for external source
- V_{DD}: application board power supply (optional, see Note 3)

Notes:

1. If the ICCCLK or ICCDATA pins are only used as outputs in the application, no signal isolation is necessary. As soon as the Programming Tool is plugged to the board, even if an ICC session is not in progress, the ICCCLK and ICCDATA pins are not available for the application. If they are used as inputs by the application, isolation such as a serial resistor has to be implemented in case another device forces the signal. Refer to the Programming Tool documentation for recommended resistor values.

2. During the ICP session, the programming tool must control the $\overline{\text{RESET}}$ pin. This can lead to conflicts between the programming tool and the application reset circuit if it drives more than 5mA at high level (push pull output or pull-up resistor<1K). A schottky diode can be used to isolate the application RESET circuit in this case. When using a classical RC network with R>1K or a reset management IC with open drain output and pull-up resistor>1K, no additional components are needed. In all cases the user must ensure that no external reset is generated by the application during the ICC session.

3. The use of Pin 7 of the ICC connector depends on the Programming Tool architecture. This pin must be connected when using most ST Programming Tools (it is used to monitor the application power supply). Please refer to the Programming Tool manual.

4. Pin 9 has to be connected to the CLKIN pin of the ST7 when the clock is not available in the application or if the selected clock option is not programmed in the option byte.

Caution: During normal operation, ICCCLK pin must be pulled- up, internally or externally (external pull-up of 10K mandatory in noisy environment). This is to avoid entering ICC mode unexpectedly during a reset. In the application, even if the pin is configured as output, any reset will put it back in input pull-up.

Figure 6. Typical ICC Interface

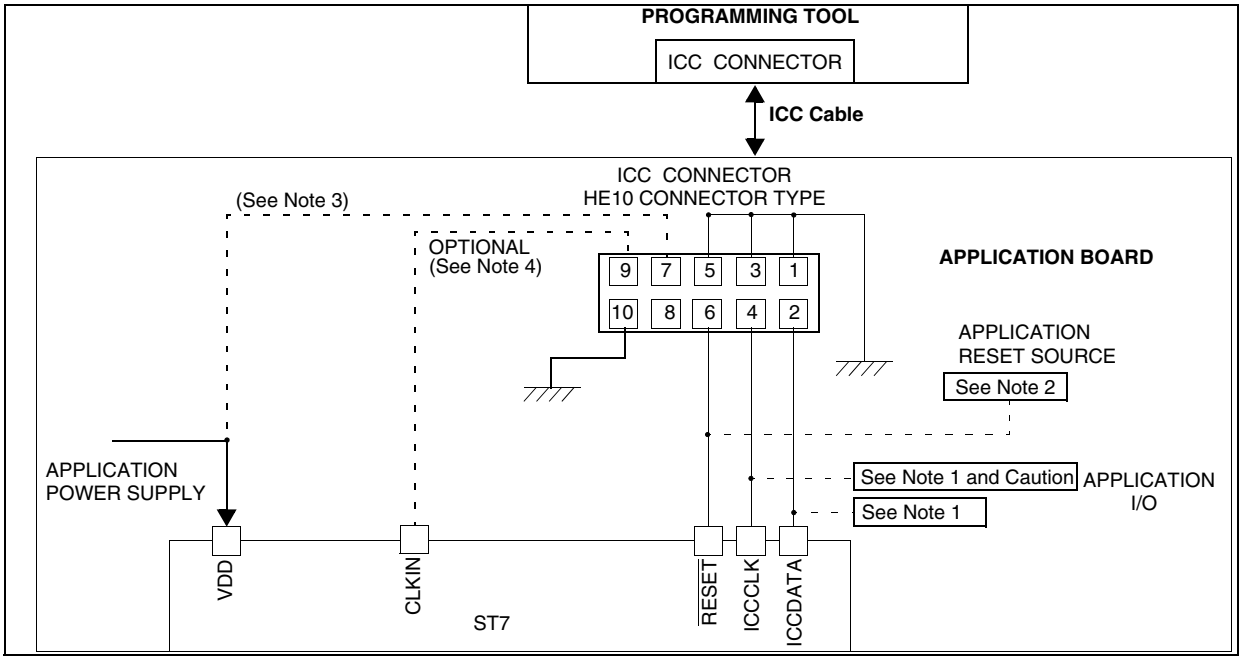

FLASH PROGRAM MEMORY (Cont'd)

4.5 Memory Protection

There are two different types of memory protection: Read Out Protection and Write/Erase Protection which can be applied individually.

4.5.1 Read out Protection

Readout protection, when selected provides a protection against program memory content extraction and against write access to Flash memory. Even if no protection can be considered as totally unbreakable, the feature provides a very high level of protection for a general purpose microcontroller. Both program and data E^2 memory are protected.

In flash devices, this protection is removed by reprogramming the option. In this case, both program and data E^2 memory are automatically erased, and the device can be reprogrammed.

Read-out protection selection depends on the device type:

– In Flash devices it is enabled and removed through the FMP_R bit in the option byte.

– In ROM devices it is enabled by mask option specified in the Option List.

4.5.2 Flash Write/Erase Protection

Write/erase protection, when set, makes it impossible to both overwrite and erase program memory. It does not apply to E^2 data. Its purpose is to provide advanced security to applications and prevent any change being made to the memory content.

Warning: Once set, Write/erase protection can never be removed. A write-protected flash device is no longer reprogrammable.

Write/erase protection is enabled through the FMP_W bit in the option byte.

4.6 Related Documentation

For details on Flash programming and ICC protocol, refer to the ST7 Flash Programming Reference Manual and to the ST7 ICC Protocol Reference Manual.

4.7 Register Description

FLASH CONTROL/STATUS REGISTER (FCSR)
Read/Write
Reset Value: 000 0000 (00h)
1st RASS Key: 0101 0110 (56h)
2nd RASS Key: 1010 1110 (AEh)

7							0
0	0	0	0	0	OPT	LAT	PGM

Note: This register is reserved for programming using ICP, IAP or other programming methods. It controls the XFlash programming and erasing operations.

When an EPB or another programming tool is used (in socket or ICP mode), the RASS keys are sent automatically.

Table 3. FLASH Register Map and Reset Values

Address (Hex.)	Register Label	7	6	5	4	3	2	1	0
002Fh	**FCSR**						OPT	LAT	PGM
	Reset Value	0	0	0	0	0	0	0	0

5 DATA EEPROM

5.1 INTRODUCTION

The Electrically Erasable Programmable Read Only Memory can be used as a non-volatile back-up for storing data. Using the EEPROM requires a basic access protocol described in this chapter.

5.2 MAIN FEATURES

- Up to 32 bytes programmed in the same cycle
- EEPROM mono-voltage (charge pump)
- Chained erase and programming cycles
- Internal control of the global programming cycle duration
- WAIT mode management
- Read-out protection

Figure 7. EEPROM Block Diagram

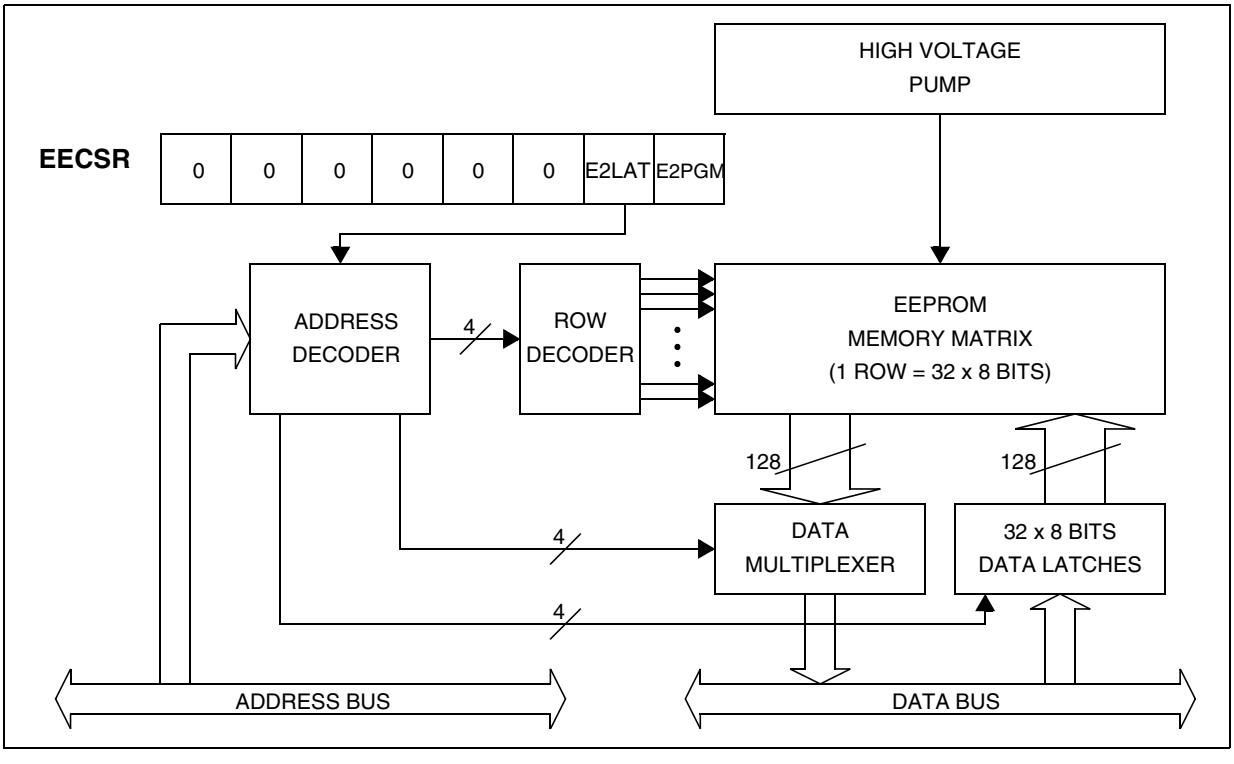

DATA EEPROM (Cont'd)

5.3 MEMORY ACCESS

The Data EEPROM memory read/write access modes are controlled by the E2LAT bit of the EEPROM Control/Status register (EECSR). The flowchart in describes these different memory access modes.

Read Operation (E2LAT = 0)

The EEPROM can be read as a normal ROM location when the E2LAT bit of the EECSR register is cleared.

On this device, Data EEPROM can also be used to execute machine code. Take care not to write to the Data EEPROM while executing from it. This would result in an unexpected code being executed.

Write Operation (E2LAT = 1)

To access the write mode, the E2LAT bit has to be set by software (the E2PGM bit remains cleared). When a write access to the EEPROM area occurs, the value is latched inside the 32 data latches according to its address.

When PGM bit is set by the software, all the previous bytes written in the data latches (up to 32) are programmed in the EEPROM cells. The effective high address (row) is determined by the last EEPROM write sequence. To avoid wrong programming, the user must take care that all the bytes written between two programming sequences have the same high address: Only the five Least Significant Bits of the address can change.

At the end of the programming cycle, the PGM and LAT bits are cleared simultaneously.

Note: Care should be taken during the programming cycle. Writing to the same memory location will over-program the memory (logical AND between the two write access data result) because the data latches are only cleared at the end of the programming cycle and by the falling edge of the E2LAT bit.
It is not possible to read the latched data.
This note is illustrated by the .

Figure 8. Data EEPROM Programming Flowchart

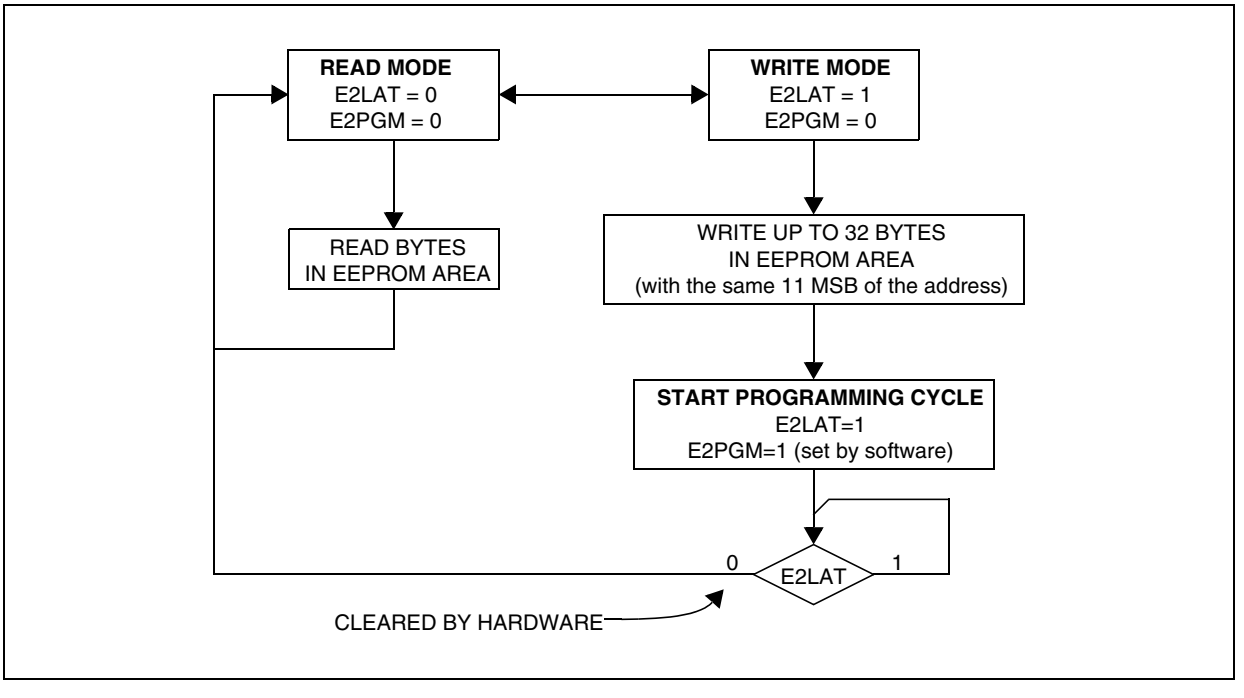

DATA EEPROM (Cont'd)

Figure 9. Data E^{2}PROM Write Operation

ROW DEFINITION

⇓ Row / Byte ⇒	0	1	2	3	...	30	31	Physical Address
0								00h...1Fh
1								20h...3Fh
...								
N								Nx20h...Nx20h+1Fh

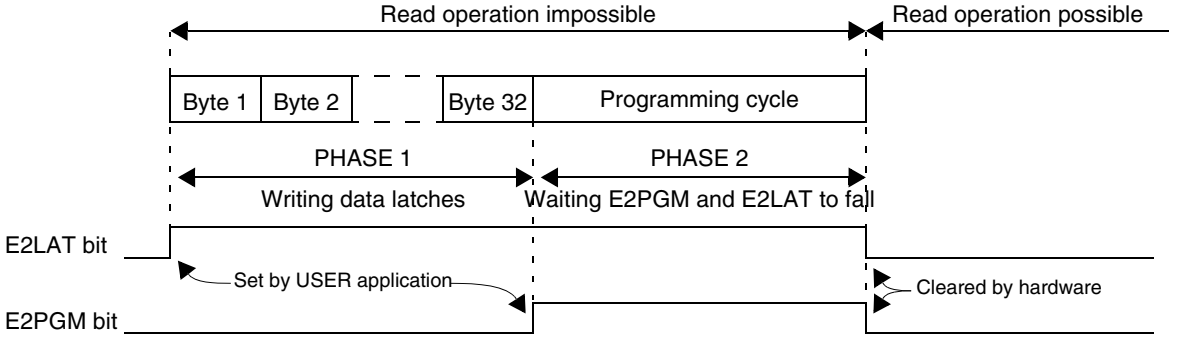

Note: If a programming cycle is interrupted (by RESET action), the integrity of the data in memory will not be guaranteed.

DATA EEPROM (Cont'd)

5.4 POWER SAVING MODES

Wait mode

The DATA EEPROM can enter WAIT mode on execution of the WFI instruction of the microcontroller or when the microcontroller enters Active Halt mode.The DATA EEPROM will immediately enter this mode if there is no programming in progress, otherwise the DATA EEPROM will finish the cycle and then enter WAIT mode.

Active Halt mode

Refer to Wait mode.

Halt mode

The DATA EEPROM immediately enters HALT mode if the microcontroller executes the HALT instruction. Therefore the EEPROM will stop the function in progress, and data may be corrupted.

5.5 ACCESS ERROR HANDLING

If a read access occurs while E2LAT = 1, then the data bus will not be driven.

If a write access occurs while E2LAT = 0, then the data on the bus will not be latched.

If a programming cycle is interrupted (by RESET action), the integrity of the data in memory will not be guaranteed.

5.6 DATA EEPROM READ-OUT PROTECTION

The read-out protection is enabled through an option bit (see option byte section).

When this option is selected, the programs and data stored in the EEPROM memory are protected against read-out (including a re-write protection). In Flash devices, when this protection is removed by reprogramming the Option Byte, the entire Program memory and EEPROM is first automatically erased.

Note: Both Program Memory and data EEPROM are protected using the same option bit.

Figure 10. Data EEPROM Programming Cycle

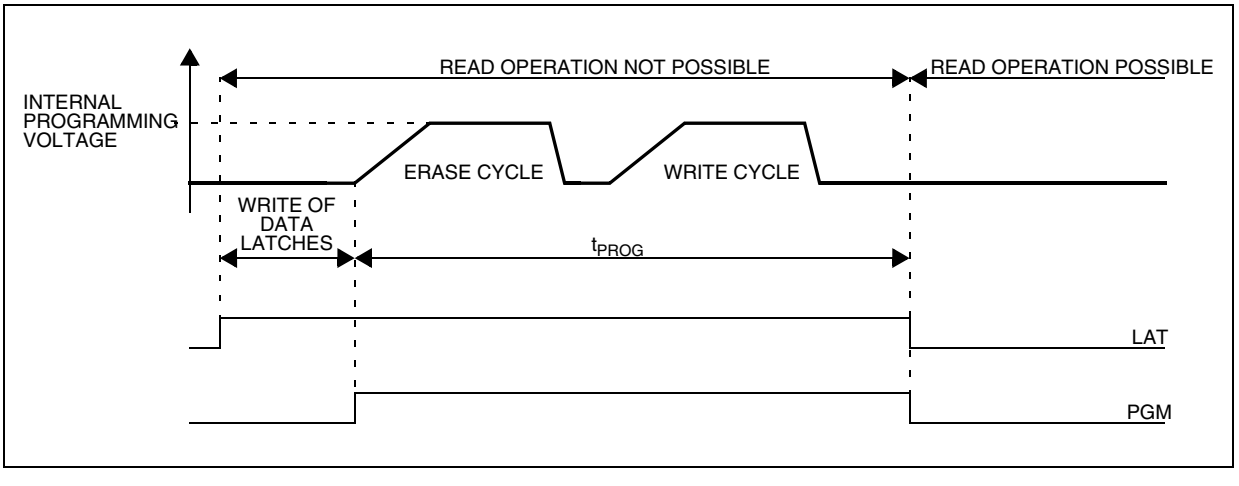

DATA EEPROM (Cont'd)

5.7 REGISTER DESCRIPTION

EEPROM CONTROL/STATUS REGISTER (EECSR)

Read/Write

Reset Value: 0000 0000 (00h)

7							0
0	0	0	0	0	0	E2LAT	E2PGM

Bits 7:2 = Reserved, forced by hardware to 0.

Bit 1 = **E2LAT** *Latch Access Transfer*
This bit is set by software. It is cleared by hardware at the end of the programming cycle. It can only be cleared by software if the E2PGM bit is cleared.
0: Read mode
1: Write mode

Bit 0 = **E2PGM** *Programming control and status*
This bit is set by software to begin the programming cycle. At the end of the programming cycle, this bit is cleared by hardware.
0: Programming finished or not yet started
1: Programming cycle is in progress

Note: If the E2PGM bit is cleared during the programming cycle, the memory data is not guaranteed.

Table 4. DATA EEPROM Register Map and Reset Values

Address (Hex.)	Register Label	7	6	5	4	3	2	1	0
0030h	**EECSR** Reset Value	0	0	0	0	0	0	E2LAT 0	E2PGM 0

6 CENTRAL PROCESSING UNIT

6.1 INTRODUCTION

This CPU has a full 8-bit architecture and contains six internal registers allowing efficient 8-bit data manipulation.

6.2 MAIN FEATURES

- 63 basic instructions
- Fast 8-bit by 8-bit multiply
- 17 main addressing modes
- Two 8-bit index registers
- 16-bit stack pointer
- Low power modes
- Maskable hardware interrupts
- Non-maskable software interrupt

6.3 CPU REGISTERS

The six CPU registers shown in are not present in the memory mapping and are accessed by specific instructions.

Accumulator (A)

The Accumulator is an 8-bit general purpose register used to hold operands and the results of the arithmetic and logic calculations and to manipulate data.

Index Registers (X and Y)

In indexed addressing modes, these 8-bit registers are used to create either effective addresses or temporary storage areas for data manipulation. (The Cross-Assembler generates a precede instruction (PRE) to indicate that the following instruction refers to the Y register.)

The Y register is not affected by the interrupt automatic procedures (not pushed to and popped from the stack).

Program Counter (PC)

The program counter is a 16-bit register containing the address of the next instruction to be executed by the CPU. It is made of two 8-bit registers PCL (Program Counter Low which is the LSB) and PCH (Program Counter High which is the MSB).

Figure 11. CPU Registers

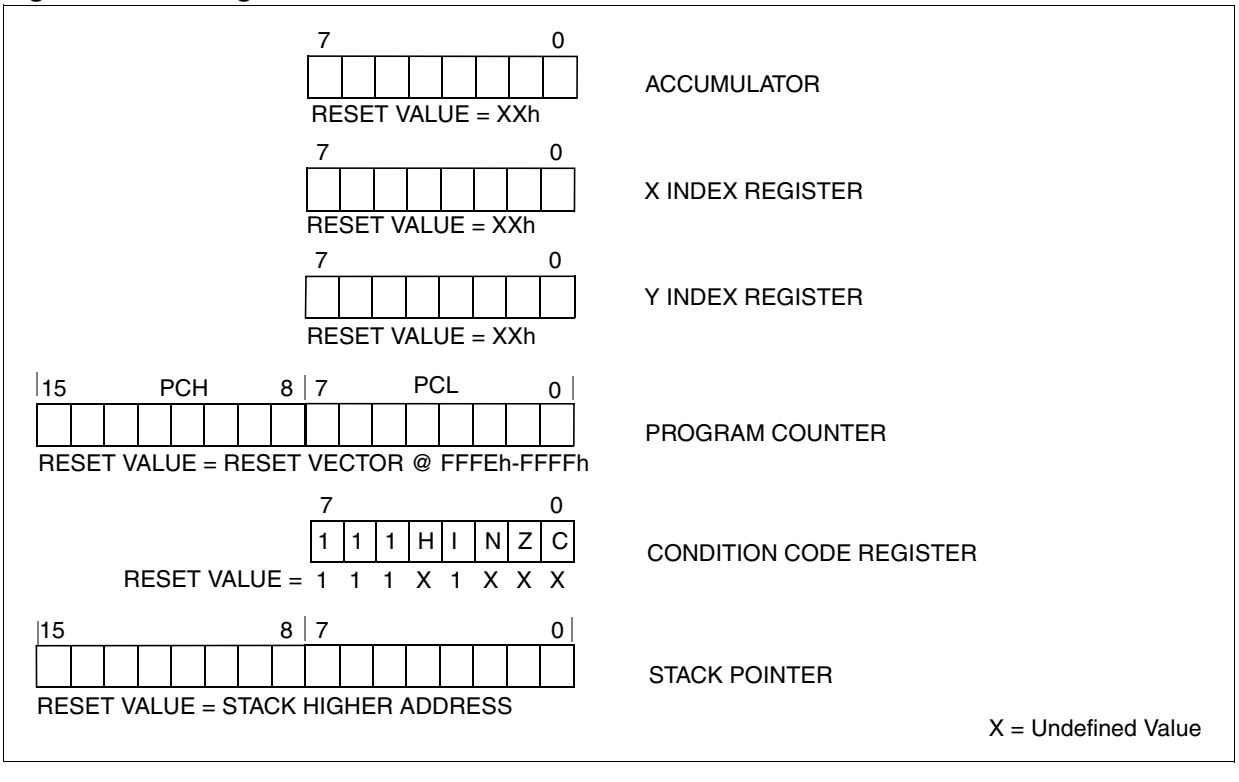

CPU REGISTERS (Cont'd)

CONDITION CODE REGISTER (CC)

Read/Write

Reset Value: 111x1xxx

7							0
1	1	1	H	I	N	Z	C

The 8-bit Condition Code register contains the interrupt mask and four flags representative of the result of the instruction just executed. This register can also be handled by the PUSH and POP instructions.

These bits can be individually tested and/or controlled by specific instructions.

Bit 4 = **H** *Half carry*.

This bit is set by hardware when a carry occurs between bits 3 and 4 of the ALU during an ADD or ADC instruction. It is reset by hardware during the same instructions.
0: No half carry has occurred.
1: A half carry has occurred.

This bit is tested using the JRH or JRNH instruction. The H bit is useful in BCD arithmetic subroutines.

Bit 3 = **I** *Interrupt mask*.

This bit is set by hardware when entering in interrupt or by software to disable all interrupts except the TRAP software interrupt. This bit is cleared by software.
0: Interrupts are enabled.
1: Interrupts are disabled.

This bit is controlled by the RIM, SIM and IRET instructions and is tested by the JRM and JRNM instructions.

Note: Interrupts requested while I is set are latched and can be processed when I is cleared. By default an interrupt routine is not interruptible because the I bit is set by hardware at the start of the routine and reset by the IRET instruction at the end of the routine. If the I bit is cleared by software in the interrupt routine, pending interrupts are serviced regardless of the priority level of the current interrupt routine.

Bit 2 = **N** *Negative*.

This bit is set and cleared by hardware. It is representative of the result sign of the last arithmetic, logical or data manipulation. It is a copy of the 7th bit of the result.
0: The result of the last operation is positive or null.
1: The result of the last operation is negative (that is, the most significant bit is a logic 1).

This bit is accessed by the JRMI and JRPL instructions.

Bit 1 = **Z** *Zero*.

This bit is set and cleared by hardware. This bit indicates that the result of the last arithmetic, logical or data manipulation is zero.
0: The result of the last operation is different from zero.
1: The result of the last operation is zero.

This bit is accessed by the JREQ and JRNE test instructions.

Bit 0 = **C** *Carry/borrow.*

This bit is set and cleared by hardware and software. It indicates an overflow or an underflow has occurred during the last arithmetic operation.
0: No overflow or underflow has occurred.
1: An overflow or underflow has occurred.

This bit is driven by the SCF and RCF instructions and tested by the JRC and JRNC instructions. It is also affected by the "bit test and branch", shift and rotate instructions.

CPU REGISTERS (Cont'd)

Stack Pointer (SP)

Read/Write

Reset Value: 00 FFh

15							8
0	0	0	0	0	0	0	0

7							0
1	1	SP5	SP4	SP3	SP2	SP1	SP0

The Stack Pointer is a 16-bit register which is always pointing to the next free location in the stack. It is then decremented after data has been pushed onto the stack and incremented before data is popped from the stack (see).

Since the stack is 64 bytes deep, the 10 most significant bits are forced by hardware. Following an MCU Reset, or after a Reset Stack Pointer instruction (RSP), the Stack Pointer contains its reset value (the SP5 to SP0 bits are set) which is the stack higher address.

The least significant byte of the Stack Pointer (called S) can be directly accessed by a LD instruction.

Note: When the lower limit is exceeded, the Stack Pointer wraps around to the stack upper limit, without indicating the stack overflow. The previously stored information is then overwritten and therefore lost. The stack also wraps in case of an underflow.

The stack is used to save the return address during a subroutine call and the CPU context during an interrupt. The user may also directly manipulate the stack by means of the PUSH and POP instructions. In the case of an interrupt, the PCL is stored at the first location pointed to by the SP. Then the other registers are stored in the next locations as shown in .

– When an interrupt is received, the SP is decremented and the context is pushed on the stack.

– On return from interrupt, the SP is incremented and the context is popped from the stack.

A subroutine call occupies two locations and an interrupt five locations in the stack area.

Figure 12. Stack Manipulation Example

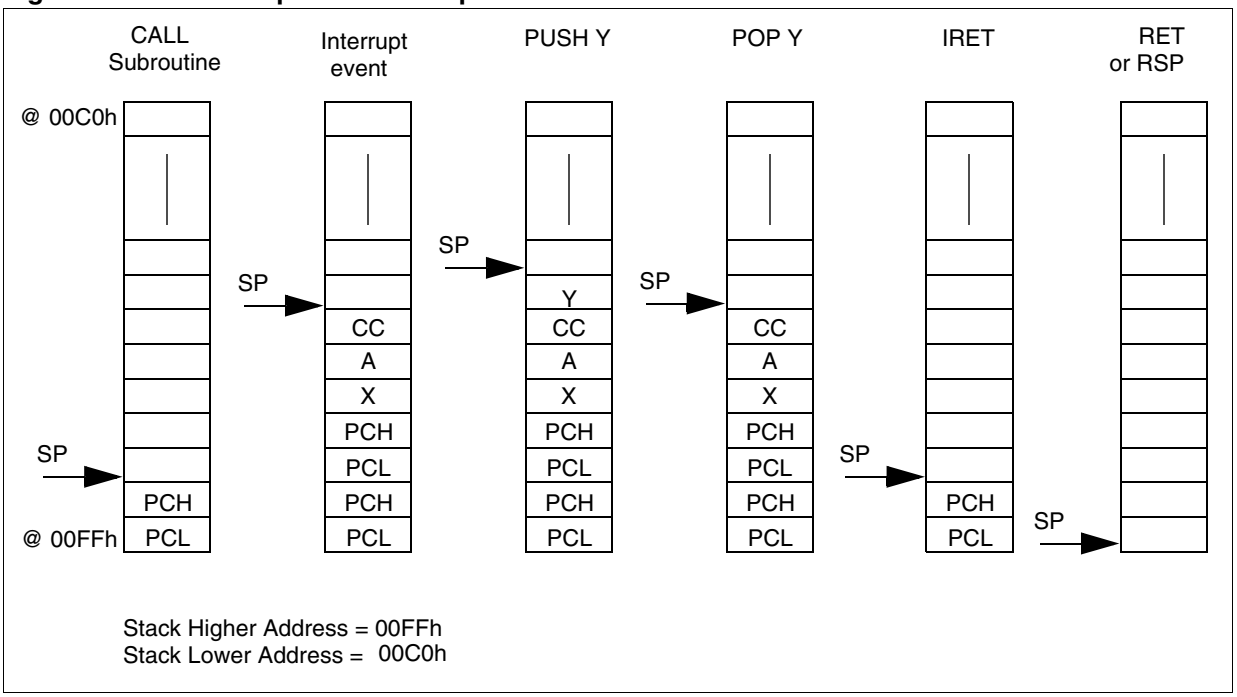

7 SUPPLY, RESET AND CLOCK MANAGEMENT

The device includes a range of utility features for securing the application in critical situations (for example in case of a power brown-out), and reducing the number of external components.

Main features

- Clock Management
  - 1 MHz internal RC oscillator (enabled by option byte)
  - External Clock Input (enabled by option byte)
  - PLL for multiplying the frequency by 4 or 8 (enabled by option byte)
- Reset Sequence Manager (RSM)
- System Integrity Management (SI)
  - Main supply Low voltage detection (LVD) with reset generation (enabled by option byte)
  - Auxiliary Voltage detector (AVD) with interrupt capability for monitoring the main supply (enabled by option byte)

7.1 INTERNAL RC OSCILLATOR ADJUSTMENT

The ST7 contains an internal RC oscillator with an accuracy of 1% for a given device, temperature and voltage. It must be calibrated to obtain the frequency required in the application. This is done by software writing a calibration value in the RCCR (RC Control Register).

Whenever the microcontroller is reset, the RCCR returns to its default value (FFh), i.e. each time the device is reset, the calibration value must be loaded in the RCCR. Predefined calibration values are stored in EEPROM for 3.0 and 5V V_{DD} supply voltages at 25°C, as shown in the following table.

RCCR	Conditions	ST7FLITE09 Address	ST7FLITE05/ ST7FLITES5 Address
RCCR0	V_{DD}=5V T_A=25°C f_{RC}=1MHz	1000h and FFDEh	FFDEh
RCCR1	V_{DD}=3.0V T_A=25°C f_{RC}=700KHz	1001h and-FFDFh	FFDFh

Notes:

– See “ELECTRICAL CHARACTERISTICS” on page 81. for more information on the frequency and accuracy of the RC oscillator.

– To improve clock stability and frequency accuracy, it is recommended to place a decoupling capacitor, typically 100nF, between the V_{DD} and V_{SS} pins as close as possible to the ST7 device.

– These two bytes are systematically programmed by ST, including on FASTROM devices. Consequently, customers intending to us e FASTROM service must not use these two bytes.

– RCCR0 and RCCR1 calibration values will be erased if the read-out protection bit is reset after it has been set. See “Read out Protection” on page 15.

Caution: If the voltage or temperature conditions change in the application, the frequency may need to be recalibrated.

Refer to application note AN1324 for information on how to calibrate the RC frequency using an external reference signal.

7.2 PHASE LOCKED LOOP

The PLL can be used to multiply a 1MHz frequency from the RC oscillator or the external clock by 4 or 8 to obtain f_{OSC} of 4 or 8 MHz. The PLL is enabled and the multiplication factor of 4 or 8 is selected by 2 option bits.

– The x4 PLL is intended for operation with V_{DD} in the 2.4V to 3.3V range

– The x8 PLL is intended for operation with V_{DD} in the 3.3V to 5.5V range

Refer to for the option byte description.

If the PLL is disabled and the RC oscillator is enabled, then f_{OSC} = 1MHz.

If both the RC oscillator and the PLL are disabled, f_{OSC} is driven by the external clock.

Figure 13. PLL Output Frequency Timing Diagram

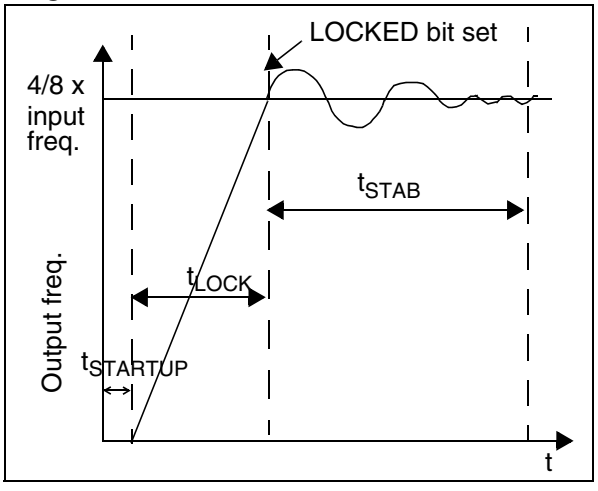

When the PLL is started, after reset or wakeup from Halt mode or AWUFH mode, it outputs the clock after a delay of $t_{STARTUP}$.

When the PLL output signal reaches the operating frequency, the LOCKED bit in the SICSCR register is set. Full PLL accuracy (ACC_{PLL}) is reached after a stabilization time of t_{STAB} (see and)

Refer to for a description of the LOCKED bit in the SICSR register.

7.3 REGISTER DESCRIPTION

MAIN CLOCK CONTROL/STATUS REGISTER (MCCSR)

Read / Write
Reset Value: 0000 0000 (00h)

7							0
0	0	0	0	0	0	MCO	SMS

Bits 7:2 = Reserved, must be kept cleared.

Bit 1 = **MCO** *Main Clock Out enable*
This bit is read/write by software and cleared by hardware after a reset. This bit allows to enable the MCO output clock.
0: MCO clock disabled, I/O port free for general purpose I/O.
1: MCO clock enabled.

Bit 0 = **SMS** *Slow Mode select*
This bit is read/write by software and cleared by hardware after a reset. This bit selects the input clock f_{OSC} or $f_{OSC}/32$.
0: Normal mode ($f_{CPU} = f_{OSC}$
1: Slow mode ($f_{CPU} = f_{OSC}/32$)

RC CONTROL REGISTER (RCCR)

Read / Write
Reset Value: 1111 1111 (FFh)

7							0
CR7	CR6	CR5	CR4	CR3	CR2	CR1	CR0

Bits 7:0 = **CR[7:0]** *RC Oscillator Frequency Adjustment Bits*
These bits must be written immediately after reset to adjust the RC oscillator frequency and to obtain an accuracy of 1%. The application can store the correct value for each voltage range in EEPROM and write it to this register at start-up.
00h = maximum available frequency
FFh = lowest available frequency

Note: To tune the oscillator, write a series of different values in the register until the correct frequency is reached. The fastest method is to use a dichotomy starting with 80h.

Table 5. Clock Register Map and Reset Values

Address (Hex.)	Register Label	7	6	5	4	3	2	1	0
0038h	**MCCSR** Reset Value	0	0	0	0	0	0	MCO 0	SMS 0
0039h	**RCCR** Reset Value	CR7 1	CR6 1	CR5 1	CR4 1	CR3 1	CR2 1	CR1 1	CR0 1

SUPPLY, RESET AND CLOCK MANAGEMENT (Cont'd)

Figure 14. Clock Management Block Diagram

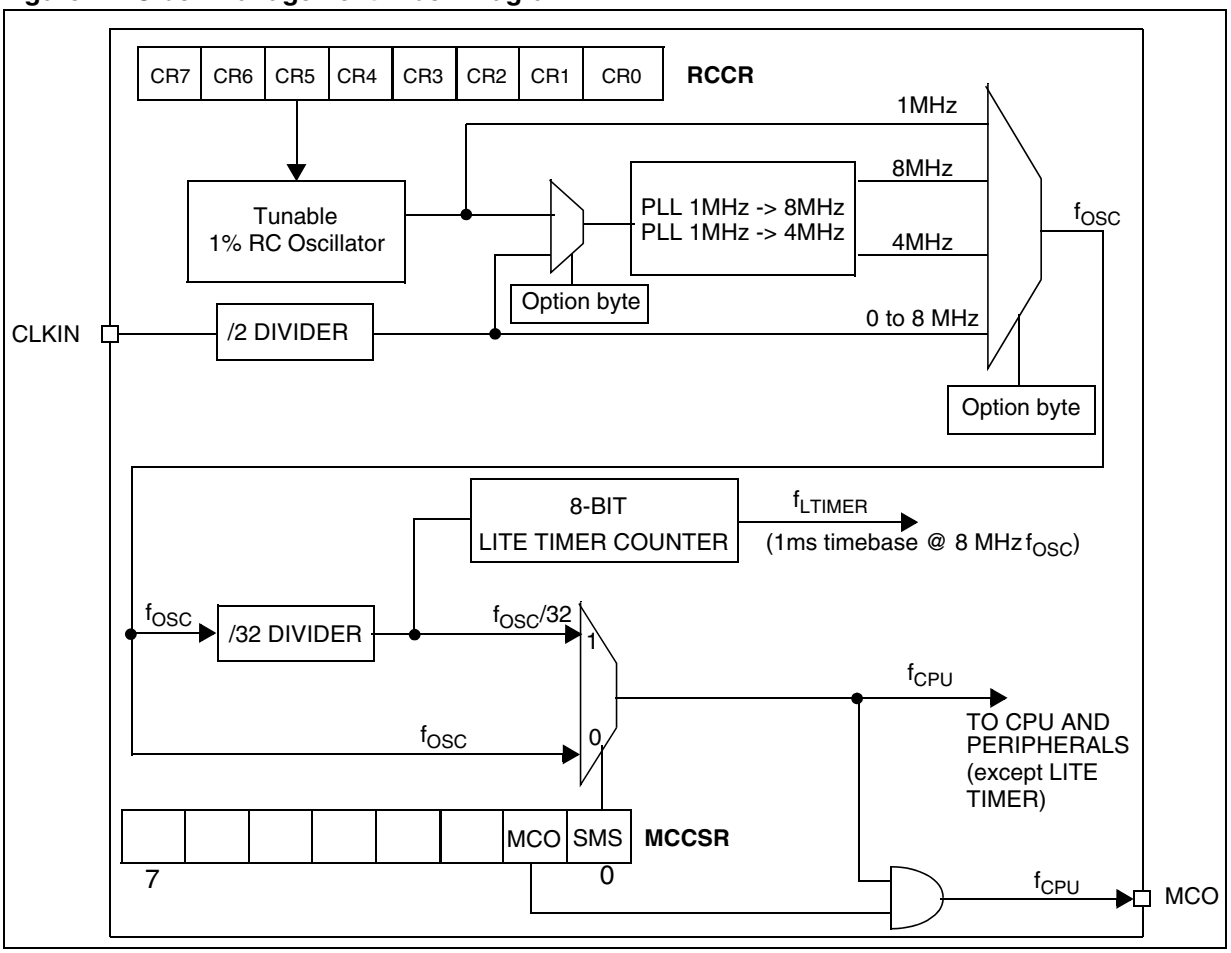

7.4 RESET SEQUENCE MANAGER (RSM)

7.4.1 Introduction

The reset sequence manager includes three RESET sources as shown in :

- External $\overline{\text{RESET}}$ source pulse
- Internal LVD RESET (Low Voltage Detection)
- Internal WATCHDOG RESET

Note: A reset can also be triggered following the detection of an illegal opcode or prebyte code. Refer to for further details.

These sources act on the $\overline{\text{RESET}}$ pin and it is always kept low during the delay phase.

The RESET service routine vector is fixed at addresses FFFEh-FFFFh in the ST7 memory map.

The basic RESET sequence consists of 3 phases as shown in :

- Active Phase depending on the RESET source
- 256 CPU clock cycle delay
- RESET vector fetch

The 256 CPU clock cycle delay allows the oscillator to stabilise and ensures that recovery has taken place from the Reset state.

The RESET vector fetch phase duration is 2 clock cycles.

If the PLL is enabled by option byte, it outputs the clock after an additional delay of $t_{STARTUP}$ (see).

Figure 15. RESET Sequence Phases

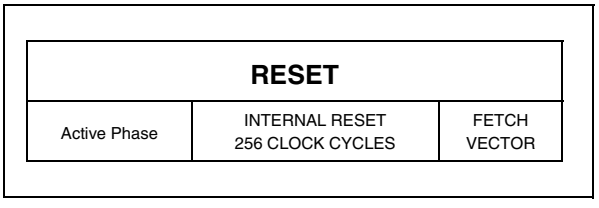

Figure 16.Reset Block Diagram

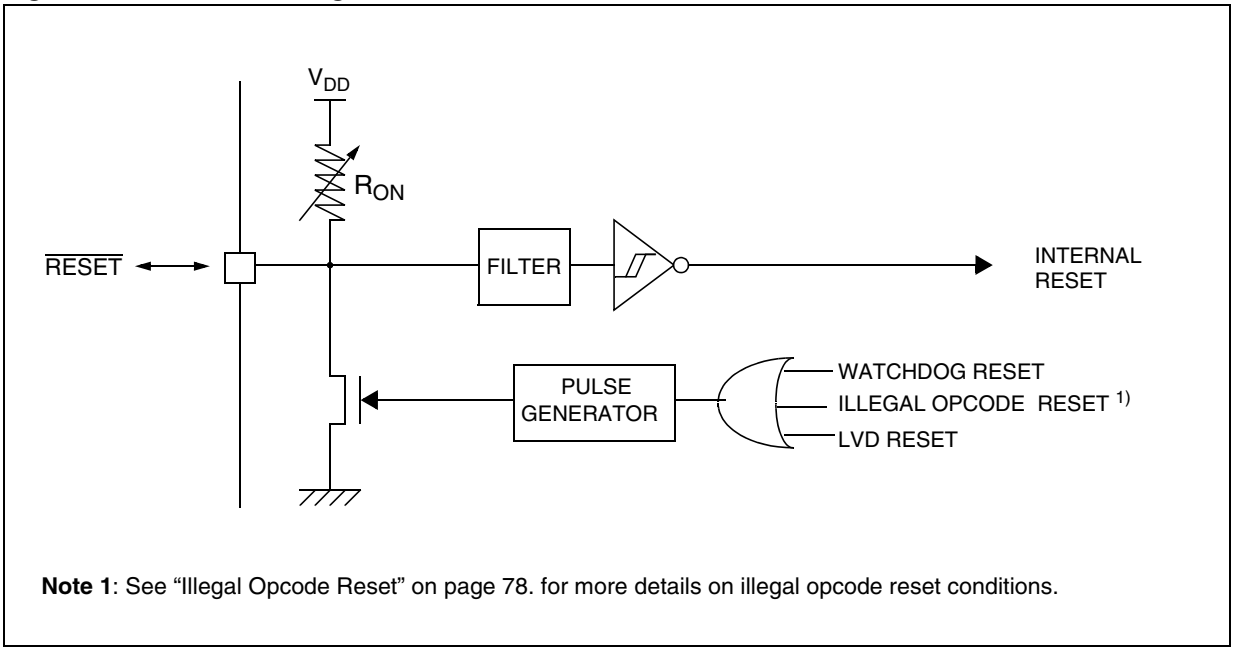

Note 1: See “Illegal Opcode Reset” on page 78. for more details on illegal opcode reset conditions.

RESET SEQUENCE MANAGER (Cont'd)

7.4.2 Asynchronous External $\overline{\text{RESET}}$ pin

The $\overline{\text{RESET}}$ pin is both an input and an open-drain output with integrated R_{ON} weak pull-up resistor. This pull-up has no fixed value but varies in accordance with the input voltage. It can be pulled low by external circuitry to reset the device. See Electrical Characteristic section for more details.

A RESET signal originating from an external source must have a duration of at least $t_{h(RSTL)in}$ in order to be recognized (see). This detection is asynchronous and therefore the MCU can enter reset state even in HALT mode.

The $\overline{\text{RESET}}$ pin is an asynchronous signal which plays a major role in EMS performance. In a noisy environment, it is recommended to follow the guidelines mentioned in the electrical characteristics section.

7.4.3 External Power-On RESET

If the LVD is disabled by option byte, to start up the microcontroller correctly, the user must ensure by means of an external reset circuit that the reset signal is held low until V_{DD} is over the minimum level specified for the selected f_{OSC} frequency.

A proper reset signal for a slow rising V_{DD} supply can generally be provided by an external RC network connected to the $\overline{\text{RESET}}$ pin.

7.4.4 Internal Low Voltage Detector (LVD) RESET

Two different RESET sequences caused by the internal LVD circuitry can be distinguished:

- Power-On RESET
- Voltage Drop RESET

The device $\overline{\text{RESET}}$ pin acts as an output that is pulled low when $V_{DD}<V_{IT+}$ (rising edge) or $V_{DD}<V_{IT-}$ (falling edge) as shown in .

The LVD filters spikes on V_{DD} larger than $t_{g(VDD)}$ to avoid parasitic resets.

7.4.5 Internal Watchdog RESET

The RESET sequence generated by a internal Watchdog counter overflow is shown in .

Starting from the Watchdog counter underflow, the device $\overline{\text{RESET}}$ pin acts as an output that is pulled low during at least $t_{w(RSTL)out}$.

Figure 17. RESET Sequences

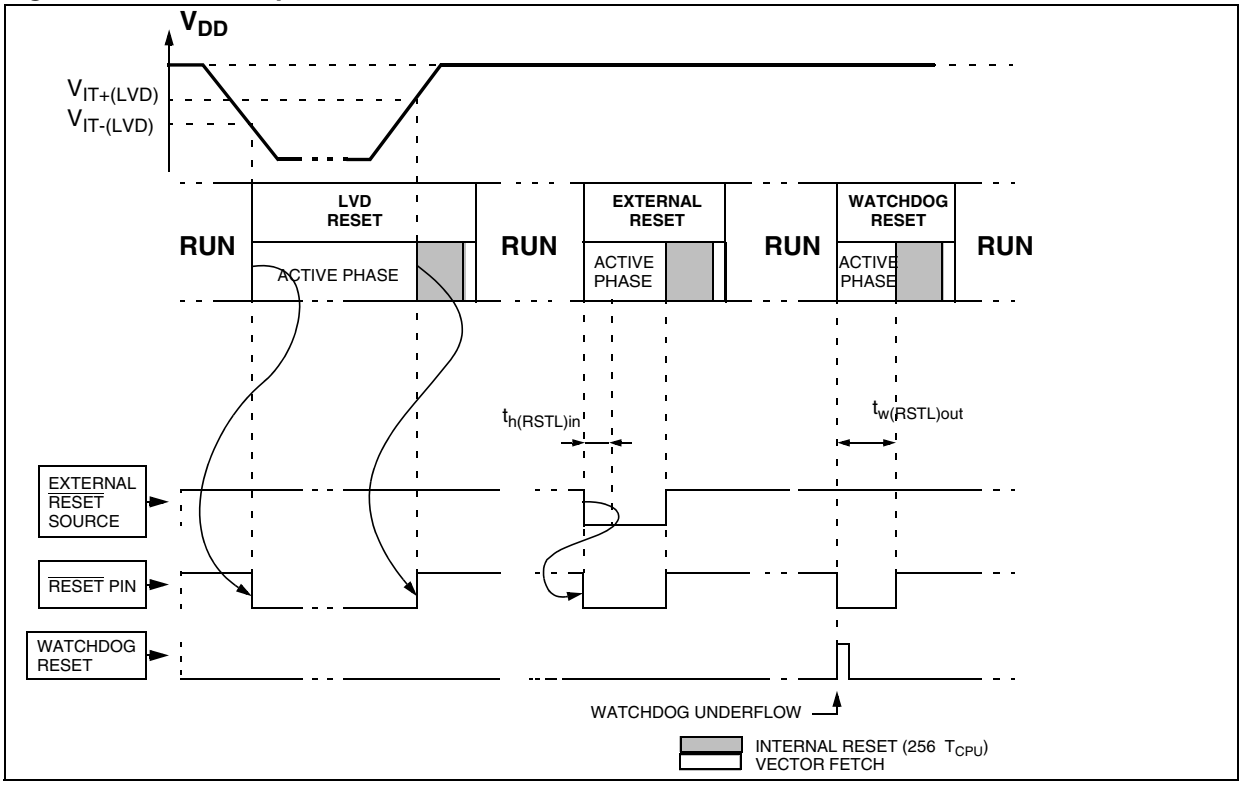

8 INTERRUPTS

The ST7 core may be interrupted by one of two different methods: Maskable hardware interrupts as listed in the Interrupt Mapping Table and a non-maskable software interrupt (TRAP). The Interrupt processing flowchart is shown in .
The maskable interrupts must be enabled by clearing the I bit in order to be serviced. However, disabled interrupts may be latched and processed when they are enabled (see external interrupts subsection).

Note: After reset, all interrupts are disabled.

When an interrupt has to be serviced:

– Normal processing is suspended at the end of the current instruction execution.

– The PC, X, A and CC registers are saved onto the stack.

– The I bit of the CC register is set to prevent additional interrupts.

– The PC is then loaded with the interrupt vector of the interrupt to service and the first instruction of the interrupt service routine is fetched (refer to the Interrupt Mapping Table for vector addresses).

The interrupt service routine should finish with the IRET instruction which causes the contents of the saved registers to be recovered from the stack.

Note: As a consequence of the IRET instruction, the I bit is cleared and the main program resumes.

Priority Management

By default, a servicing interrupt cannot be interrupted because the I bit is set by hardware entering in interrupt routine.

In the case when several interrupts are simultaneously pending, an hardware priority defines which one will be serviced first (see the Interrupt Mapping Table).

Interrupts and Low Power Mode

All interrupts allow the processor to leave the WAIT low power mode. Only external and specifically mentioned interrupts allow the processor to leave the HALT low power mode (refer to the “Exit from HALT” column in the Interrupt Mapping Table).

8.1 NON MASKABLE SOFTWARE INTERRUPT

This interrupt is entered when the TRAP instruction is executed regardless of the state of the I bit. It is serviced according to the flowchart in
18.

8.2 EXTERNAL INTERRUPTS

External interrupt vectors can be loaded into the PC register if the corresponding external interrupt occurred and if the I bit is cleared. These interrupts allow the processor to leave the HALT low power mode.

The external interrupt polarity is selected through the miscellaneous register or interrupt register (if available).

An external interrupt triggered on edge will be latched and the interrupt request automatically cleared upon entering the interrupt service routine.

Caution: The type of sensitivity defined in the Miscellaneous or Interrupt register (if available) applies to the ei source. In case of a NANDed source (as described in the I/O ports section), a low level on an I/O pin, configured as input with interrupt, masks the interrupt request even in case of rising-edge sensitivity.

8.3 PERIPHERAL INTERRUPTS

Different peripheral interrupt flags in the status register are able to cause an interrupt when they are active if both:

– The I bit of the CC register is cleared.

– The corresponding enable bit is set in the control register.

If any of these two conditions is false, the interrupt is latched and thus remains pending.

Clearing an interrupt request is done by:

– Writing “0” to the corresponding bit in the status register or

– Access to the status register while the flag is set followed by a read or write of an associated register.

Note: The clearing sequence resets the internal latch. A pending interrupt (that is, waiting for being enabled) will therefore be lost if the clear sequence is executed.

INTERRUPTS (Cont'd)

Figure 18. Interrupt Processing Flowchart

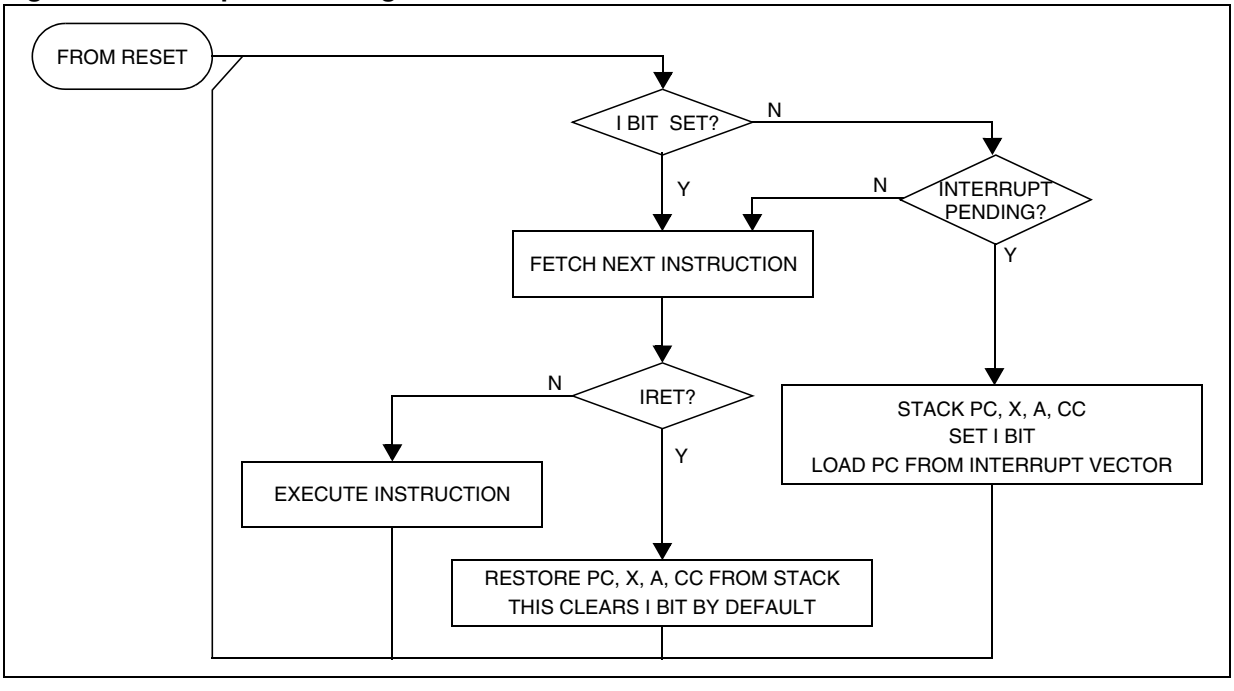

Table 6. Interrupt Mapping

N°	Source Block	Description	Register Label	Priority Order	Exit from HALT	Address Vector
	RESET	Reset	N/A	Highest Priority	yes	FFFEh-FFFFh
	TRAP	Software Interrupt			no	FFFCh-FFFDh
0		Not used				FFFAh-FFFBh
1	ei0	External Interrupt 0			yes	FFF8h-FFF9h
2	ei1	External Interrupt 1				FFF6h-FFF7h
3	ei2	External Interrupt 2				FFF4h-FFF5h
4	ei3	External Interrupt 3				FFF2h-FFF3h
5		Not used				FFF0h-FFF1h
6		Not used				FFEEh-FFEFh
7	SI	AVD interrupt	SICSR		no	FFECh-FFEDh
8	AT TIMER	AT TIMER Output Compare Interrupt	PWM0CSR		no	FFEAh-FFEBh
9		AT TIMER Overflow Interrupt	ATCSR		yes	FFE8h-FFE9h
10	LITE TIMER	LITE TIMER Input Capture Interrupt	LTCSR		no	FFE6h-FFE7h
11		LITE TIMER RTC Interrupt	LTCSR		yes	FFE4h-FFE5h
12	SPI	SPI Peripheral Interrupts	SPICSR	Lowest Priority	yes	FFE2h-FFE3h
13		Not used				FFE0h-FFE1h

INTERRUPTS (Cont'd)

EXTERNAL INTERRUPT CONTROL REGISTER (EICR)

Read/Write

Reset Value: 0000 0000 (00h)

7							0
IS31	IS30	IS21	IS20	IS11	IS10	IS01	IS00

Bit 7:6 = **IS3[1:0]** *ei3 sensitivity*
These bits define the interrupt sensitivity for ei3 (Port B0) according to .

Bit 5:4 = **IS2[1:0]** *ei2 sensitivity*
These bits define the interrupt sensitivity for ei2 (Port B3) according to .

Bit 3:2 = **IS1[1:0]** *ei1 sensitivity*
These bits define the interrupt sensitivity for ei1 (Port A7) according to .

Bit 1:0 = **IS0[1:0]** *ei0 sensitivity*
These bits define the interrupt sensitivity for ei0 (Port A0) according to .

Notes:

1. These 8 bits can be written only when the I bit in the CC register is set.

2. Changing the sensitivity of a particular external interrupt clears this pending interrupt. This can be used to clear unwanted pending interrupts. Refer to section "External interrupt function" on page 42.

Table 7. Interrupt Sensitivity Bits

ISx1	ISx0	External Interrupt Sensitivity
0	0	Falling edge & low level
0	1	Rising edge only
1	0	Falling edge only
1	1	Rising and falling edge

8.4 SYSTEM INTEGRITY MANAGEMENT (SI)

The System Integrity Management block contains the Low voltage Detector (LVD) and Auxiliary Voltage Detector (AVD) functions. It is managed by the SICSR register.

Note: A reset can also be triggered following the detection of an illegal opcode or prebyte code. Refer to for further details.

8.4.1 Low Voltage Detector (LVD)

The Low Voltage Detector function (LVD) generates a static reset when the V_{DD} supply voltage is below a $V_{IT-(LVD)}$ reference value. This means that it secures the power-up as well as the power-down keeping the ST7 in reset.

The $V_{IT-(LVD)}$ reference value for a voltage drop is lower than the $V_{IT+(LVD)}$ reference value for power-on in order to avoid a parasitic reset when the MCU starts running and sinks current on the supply (hysteresis).

The LVD Reset circuitry generates a reset when V_{DD} is below:

– $V_{IT+(LVD)}$when V_{DD} is rising

– $V_{IT-(LVD)}$ when V_{DD} is falling

The LVD function is illustrated in .

The voltage threshold can be configured by option byte to be low, medium or high. See on page 112.

Provided the minimum V_{DD} value (guaranteed for the oscillator frequency) is above $V_{IT-(LVD)}$, the MCU can only be in two modes:

– under full software control

– in static safe reset

In these conditions, secure operation is always ensured for the application without the need for external reset hardware.

During a Low Voltage Detector Reset, the $\overline{RESET}$ pin is held low, thus permitting the MCU to reset other devices.

Notes:

The LVD is an optional function which can be selected by option byte. See 112.

It allows the device to be used without any external RESET circuitry.

If the LVD is disabled, an external circuitry must be used to ensure a proper power-on reset.

It is recommended to make sure that the V_{DD} supply voltage rises monotonously when the device is exiting from Reset, to ensure the application functions properly.

Caution: If an LVD reset occurs after a watchdog reset has occurred, the LVD will take priority and will clear the watchdog flag.

Figure 19. Low Voltage Detector vs Reset

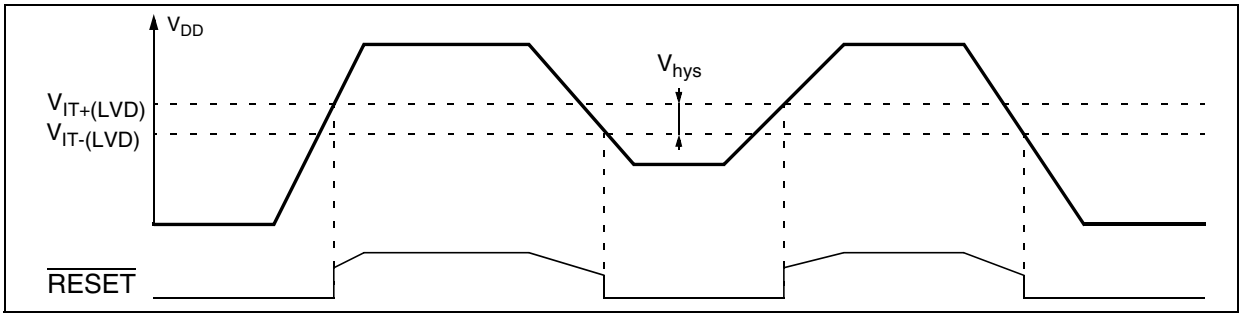

Figure 20. Reset and Supply Management Block Diagram

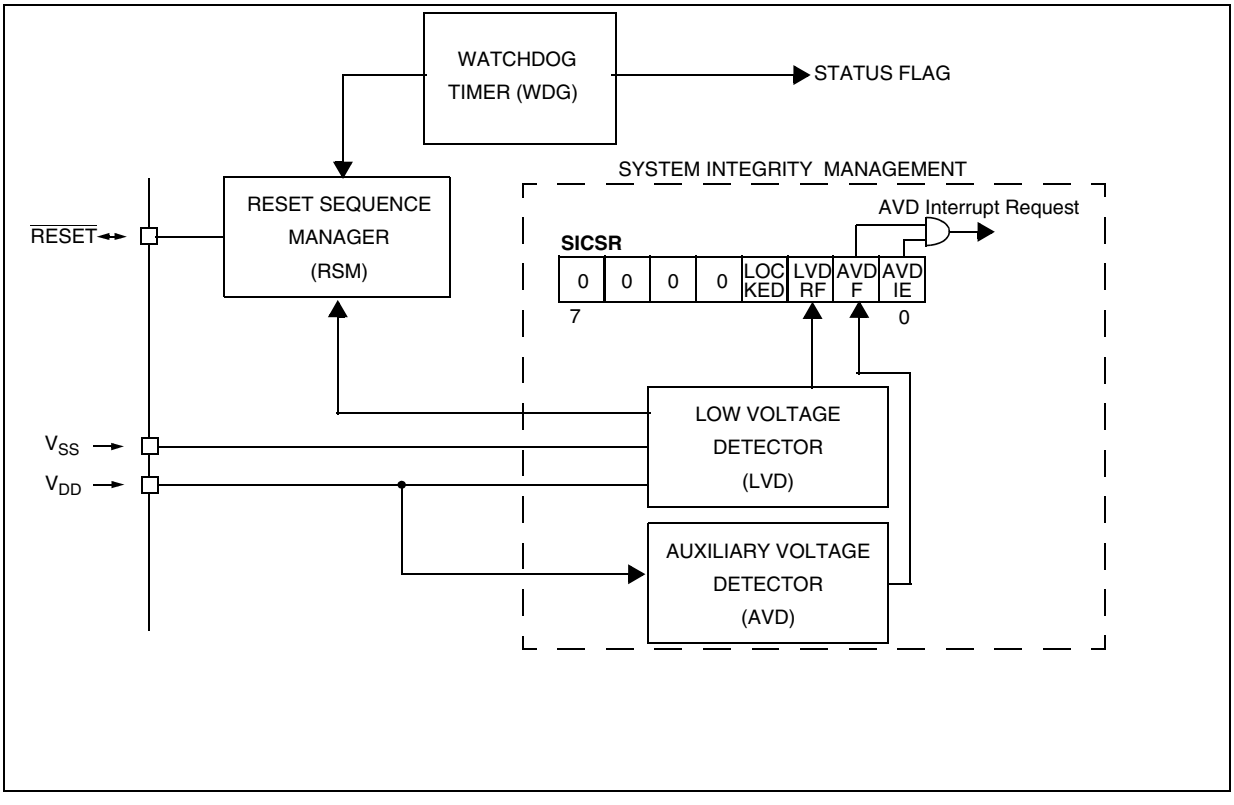

SYSTEM INTEGRITY MANAGEMENT (Cont'd)

8.4.2 Auxiliary Voltage Detector (AVD)

The Voltage Detector function (AVD) is based on an analog comparison between a $V_{IT-(AVD)}$ and $V_{IT+(AVD)}$ reference value and the V_{DD} main supply voltage (V_{AVD}). The $V_{IT-(AVD)}$ reference value for falling voltage is lower than the $V_{IT+(AVD)}$ reference value for rising voltage in order to avoid parasitic detection (hysteresis).

The output of the AVD comparator is directly readable by the application software through a real time status bit (AVDF) in the SICSR register. This bit is read only.

Caution: The AVD functions only if the LVD is enabled through the option byte.

8.4.2.1 Monitoring the V_{DD} Main Supply

The AVD voltage threshold value is relative to the selected LVD threshold configured by option byte (see).

If the AVD interrupt is enabled, an interrupt is generated when the voltage crosses the $V_{IT+(LVD)}$ or $V_{IT-(AVD)}$ threshold (AVDF bit is set).

In the case of a drop in voltage, the AVD interrupt acts as an early warning, allowing software to shut down safely before the LVD resets the microcontroller. See .

The interrupt on the rising edge is used to inform the application that the V_{DD} warning state is over

Figure 21. Using the AVD to Monitor V_{DD}

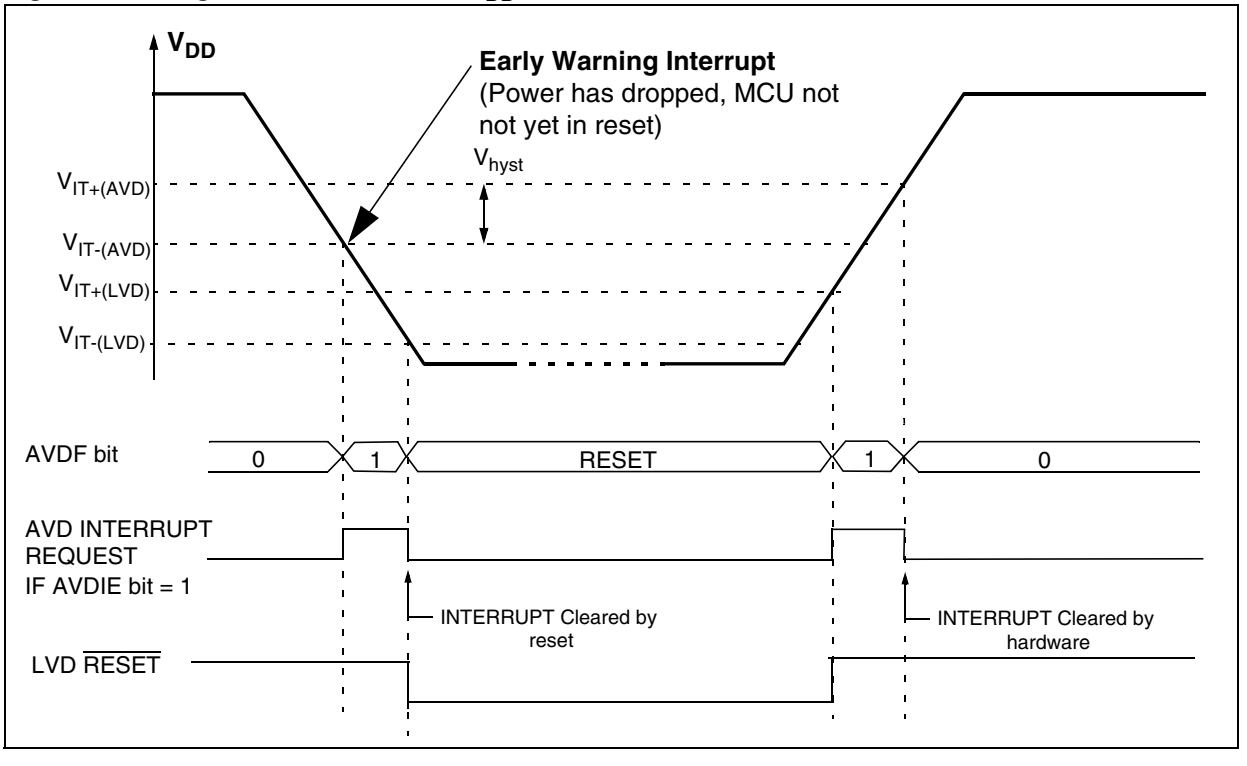

SYSTEM INTEGRITY MANAGEMENT (Cont'd)

8.4.3 Low Power Modes

Mode	Description
WAIT	No effect on SI. AVD interrupts cause the device to exit from Wait mode.
HALT	The SICSR register is frozen. The AVD remains active but the AVD interrupt cannot be used to exit from Halt mode.

8.4.3.1 Interrupts

The AVD interrupt event generates an interrupt if the corresponding Enable Control Bit (AVDIE) is set and the interrupt mask in the CC register is reset (RIM instruction).

Interrupt Event	Event Flag	Enable Control Bit	Exit from Wait	Exit from Halt
AVD event	AVDF	AVDIE	Yes	No

SYSTEM INTEGRITY MANAGEMENT (Cont'd)

8.4.4 Register Description

SYSTEM INTEGRITY (SI) CONTROL/STATUS REGISTER (SICSR)

Read/Write

Reset Value: 0000 0x00 (0xh)

7							0
0	0	0	0	LOCKED	LVDRF	AVDF	AVDIE

Bit 7:4 = Reserved, must be kept cleared.

Bit 3 = **LOCKED** *PLL Locked Flag*
This bit is set by hardware. It is cleared only by a power-on reset. It is set automatically when the PLL reaches its operating frequency.
0: PLL not locked
1: PLL locked

Bit 2 = **LVDRF** *LVD reset flag*
This bit indicates that the last Reset was generated by the LVD block. It is set by hardware (LVD reset) and cleared by software (writing zero). See WDGRF flag description in for more details. When the LVD is disabled by OPTION BYTE, the LVDRF bit value is undefined.

Bit 1 = **AVDF** *Voltage Detector flag*
This read-only bit is set and cleared by hardware. If the AVDIE bit is set, an interrupt request is generated when the AVDF bit is set. Refer to 21 for additional details
0: V_{DD} over AVD threshold
1: V_{DD} under AVD threshold

Bit 0 = **AVDIE** *Voltage Detector interrupt enable*
This bit is set and cleared by software. It enables an interrupt to be generated when the AVDF flag is set. The pending interrupt information is automatically cleared when software enters the AVD interrupt routine.
0: AVD interrupt disabled
1: AVD interrupt enabled

Application notes

The LVDRF flag is not cleared when another RESET type occurs (external or watchdog), the LVDRF flag remains set to keep trace of the original failure.
In this case, a watchdog reset can be detected by software while an external reset can not.

Table 8. System Integrity Register Map and Reset Values

Address (Hex.)	Register Label	7	6	5	4	3	2	1	0
003Ah	**SICSR** Reset Value	0	0	0	0	LOCKED 0	LVDRF x	AVDF 0	AVDIE 0

9 POWER SAVING MODES

9.1 INTRODUCTION

To give a large measure of flexibility to the application in terms of power consumption, four main power saving modes are implemented in the ST7 (see): SLOW, WAIT (SLOW WAIT), ACTIVE HALT and HALT.

After a RESET the normal operating mode is selected by default (RUN mode). This mode drives the device (CPU and embedded peripherals) by means of a master clock which is based on the main oscillator frequency (f_{OSC}).

From RUN mode, the different power saving modes may be selected by setting the relevant register bits or by calling the specific ST7 software instruction whose action depends on the oscillator status.

Figure 22. Power Saving Mode Transitions

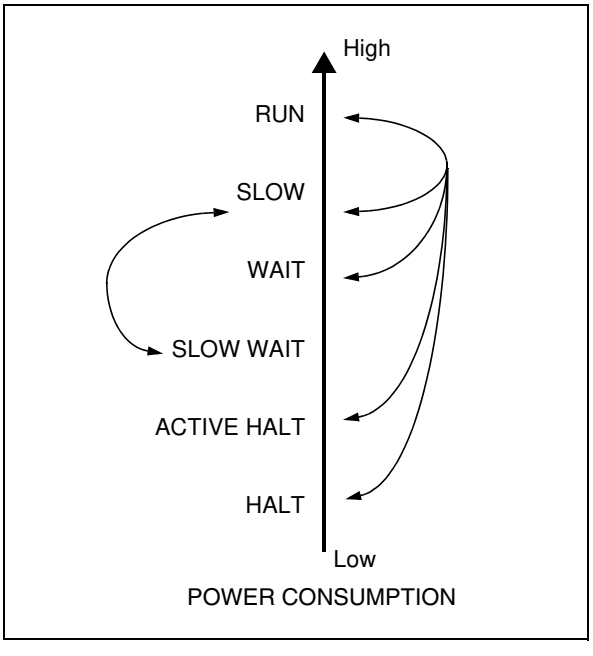

9.2 SLOW MODE

This mode has two targets:

– To reduce power consumption by decreasing the internal clock in the device,

– To adapt the internal clock frequency (f_{CPU}) to the available supply voltage.

SLOW mode is controlled by the SMS bit in the MCCSR register which enables or disables Slow mode.

In this mode, the oscillator frequency is divided by 32. The CPU and peripherals are clocked at this lower frequency.

Notes:

SLOW-WAIT mode is activated when entering WAIT mode while the device is already in SLOW mode.

SLOW mode has no effect on the Lite Timer which is already clocked at $F_{OSC/32}$.

Figure 23. SLOW Mode Clock Transition

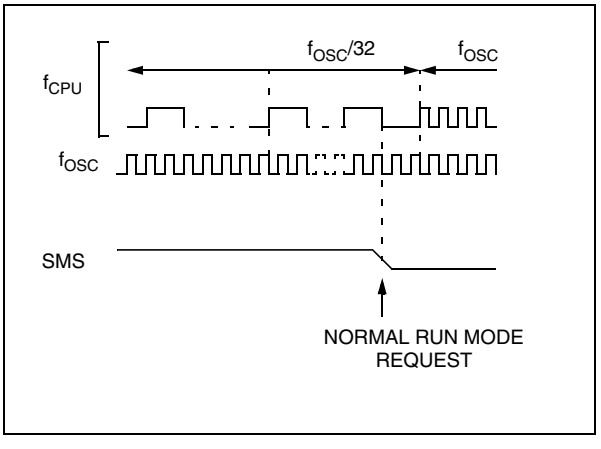

POWER SAVING MODES (Cont'd)

9.3 WAIT MODE

WAIT mode places the MCU in a low power consumption mode by stopping the CPU.
This power saving mode is selected by calling the 'WFI' instruction.
All peripherals remain active. During WAIT mode, the I bit of the CC register is cleared, to enable all interrupts. All other registers and memory remain unchanged. The MCU remains in WAIT mode until an interrupt or RESET occurs, whereupon the Program Counter branches to the starting address of the interrupt or Reset service routine.
The MCU will remain in WAIT mode until a Reset or an Interrupt occurs, causing it to wake up.

Refer to .

Figure 24. WAIT Mode Flow-chart

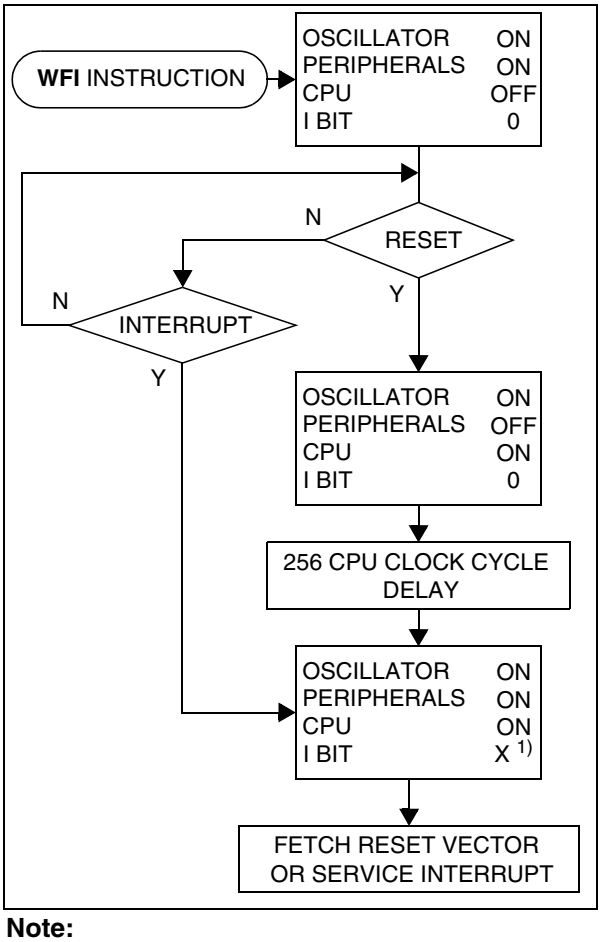

Note:

1. Before servicing an interrupt, the CC register is pushed on the stack. The I bit of the CC register is set during the interrupt routine and cleared when the CC register is popped.

POWER SAVING MODES (Cont'd)

9.4 ACTIVE-HALT AND HALT MODES

ACTIVE-HALT and HALT modes are the two lowest power consumption modes of the MCU. They are both entered by executing the 'HALT' instruction. The decision to enter either in ACTIVE-HALT or HALT mode is given by the LTCSR/ATCSR register status as shown in the following table:.

LTCSR TBIE bit	ATCSR OVFIE bit	ATCSR CK1 bit	ATCSR CK0 bit	Meaning
0	x	x	0	ACTIVE-HALT mode disabled
0	0	x	x	
0	1	1	1	
1	x	x	x	ACTIVE-HALT mode enabled
x	1	0	1	

9.4.1 ACTIVE-HALT MODE

ACTIVE-HALT mode is the lowest power consumption mode of the MCU with a real time clock available. It is entered by executing the 'HALT' instruction when active halt mode is enabled.

The MCU can exit ACTIVE-HALT mode on reception of a Lite Timer / AT Timer interrupt or a RESET.

– When exiting ACTIVE-HALT mode by means of a RESET, a 256 CPU cycle delay occurs. After the start up delay, the CPU resumes operation by fetching the reset vector which woke it up (see).

– When exiting ACTIVE-HALT mode by means of an interrupt, the CPU immediately resumes operation by servicing the interrupt vector which woke it up (see).

When entering ACTIVE-HALT mode, the I bit in the CC register is cleared to enable interrupts. Therefore, if an interrupt is pending, the MCU wakes up immediately.

In ACTIVE-HALT mode, only the main oscillator and the selected timer counter (LT/AT) are running to keep a wake-up time base. All other peripherals are not clocked except those which get their clock supply from another clock generator (such as external or auxiliary oscillator).

Caution: As soon as ACTIVE-HALT is enabled, executing a HALT instruction while the Watchdog is active does not generate a RESET if the WDGHALT bit is reset.
This means that the device cannot spend more than a defined delay in this power saving mode.

Figure 25. ACTIVE-HALT Timing Overview

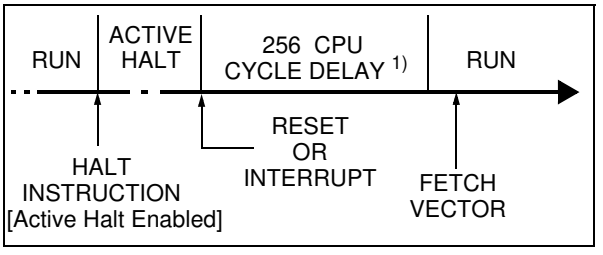

Figure 26. ACTIVE-HALT Mode Flow-chart

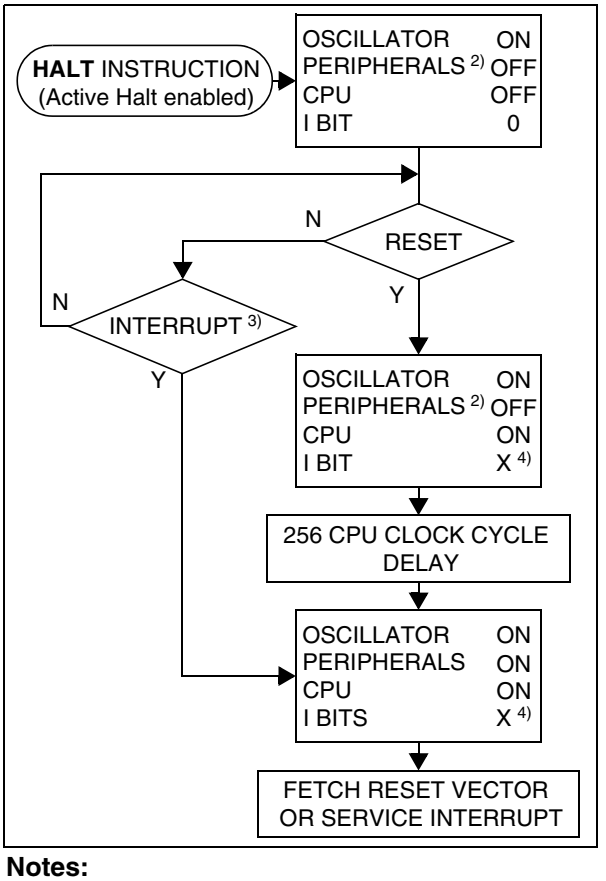

Notes:

1. This delay occurs only if the MCU exits ACTIVE-HALT mode by means of a RESET.
2. Peripherals clocked with an external clock source can still be active.
3. Only the Lite Timer RTC and AT Timer interrupts can exit the MCU from ACTIVE-HALT mode.
4. Before servicing an interrupt, the CC register is pushed on the stack. The I bit of the CC register is set during the interrupt routine and cleared when the CC register is popped.

POWER SAVING MODES (Cont'd)

9.4.2 HALT MODE

The HALT mode is the lowest power consumption mode of the MCU. It is entered by executing the 'HALT' instruction when active halt mode is disabled.

The MCU can exit HALT mode on reception of either a specific interrupt (see Table 6, "Interrupt Mapping," on page 30) or a RESET. When exiting HALT mode by means of a RESET or an interrupt, the oscillator is immediately turned on and the 256 CPU cycle delay is used to stabilize the oscillator. After the start up delay, the CPU resumes operation by servicing the interrupt or by fetching the reset vector which woke it up (see).

When entering HALT mode, the I bit in the CC register is forced to 0 to enable interrupts. Therefore, if an interrupt is pending, the MCU wakes immediately.

In HALT mode, the main oscillator is turned off causing all internal processing to be stopped, including the operation of the on-chip peripherals. All peripherals are not clocked except the ones which get their clock supply from another clock generator (such as an external or auxiliary oscillator).

The compatibility of Watchdog operation with HALT mode is configured by the "WDGHALT" option bit of the option byte. The HALT instruction when executed while the Watchdog system is enabled, can generate a Watchdog RESET (see tion 15.1 on page 112 for more details).

Figure 27. HALT Timing Overview

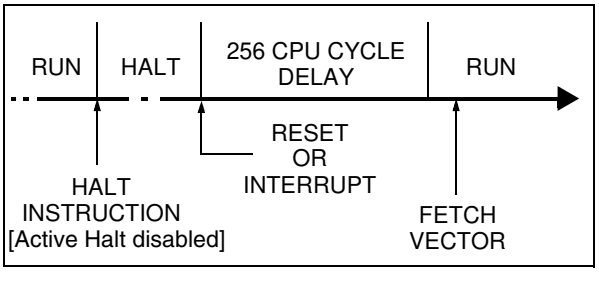

Figure 28. HALT Mode Flow-chart

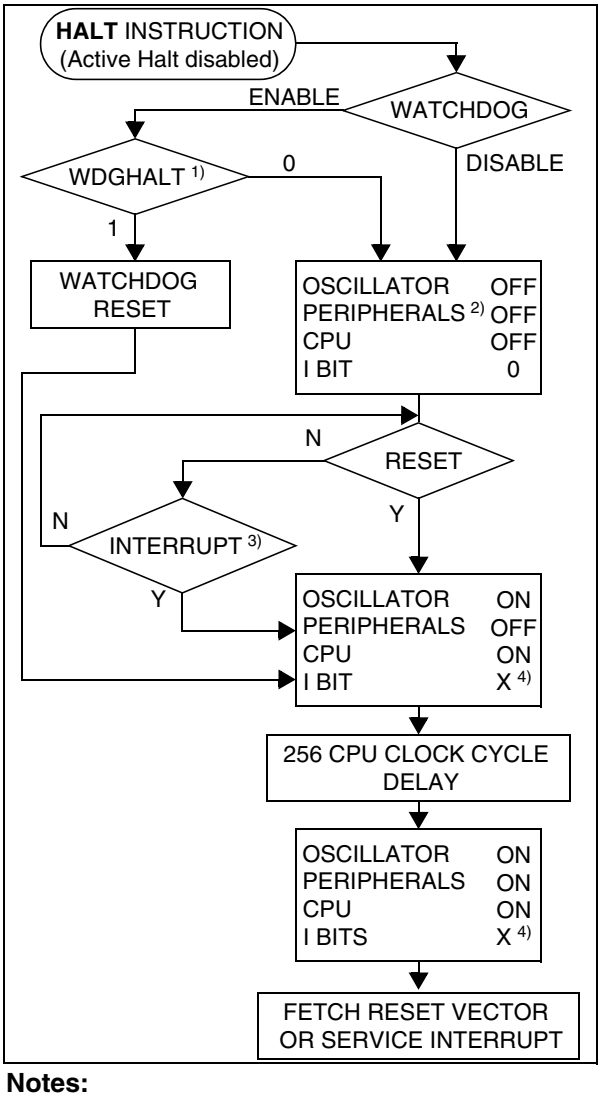

Notes:

1. WDGHALT is an option bit. See option byte section for more details.

2. Peripheral clocked with an external clock source can still be active.

3. Only some specific interrupts can exit the MCU from HALT mode (such as external interrupt). Refer to Table 6, "Interrupt Mapping," on page 30 for more details.

4. Before servicing an interrupt, the CC register is pushed on the stack. The I bit of the CC register is set during the interrupt routine and cleared when the CC register is popped.

5. If the PLL is enabled by option byte, it outputs the clock after a delay of $t_{STARTUP}$ (see).

POWER SAVING MODES (Cont'd)

9.4.2.1 HALT Mode Recommendations

– Make sure that an external event is available to wake up the microcontroller from Halt mode.

– When using an external interrupt to wake up the microcontroller, reinitialize the corresponding I/O as "Input Pull-up with Interrupt" before executing the HALT instruction. The main reason for this is that the I/O may be wrongly configured due to external interference or by an unforeseen logical condition.

– For the same reason, reinitialize the level sensitiveness of each external interrupt as a precautionary measure.

– The opcode for the HALT instruction is 0x8E. To avoid an unexpected HALT instruction due to a program counter failure, it is advised to clear all occurrences of the data value 0x8E from memory. For example, avoid defining a constant in ROM with the value 0x8E.

– As the HALT instruction clears the I bit in the CC register to allow interrupts, the user may choose to clear all pending interrupt bits before executing the HALT instruction. This avoids entering other peripheral interrupt routines after executing the external interrupt routine corresponding to the wake-up event (reset or external interrupt).

10 I/O PORTS

10.1 INTRODUCTION

The I/O ports offer different functional modes:
– transfer of data through digital inputs and outputs

and for specific pins:
– external interrupt generation
– alternate signal input/output for the on-chip peripherals.

An I/O port contains up to 8 pins. Each pin can be programmed independently as digital input (with or without interrupt generation) or digital output.

10.2 FUNCTIONAL DESCRIPTION

Each port has 2 main registers:

– Data Register (DR)

– Data Direction Register (DDR)

and one optional register:

– Option Register (OR)

Each I/O pin may be programmed using the corresponding register bits in the DDR and OR registers: bit X corresponding to pin X of the port. The same correspondence is used for the DR register.

The following description takes into account the OR register, (for specific ports which do not provide this register refer to the I/O Port Implementation section). The generic I/O block diagram is shown in

10.2.1 Input Modes

The input configuration is selected by clearing the corresponding DDR register bit.

In this case, reading the DR register returns the digital value applied to the external I/O pin.

Different input modes can be selected by software through the OR register.

Note: Writing the DR register modifies the latch value but does not affect the pin status.

External interrupt function

When an I/O is configured as Input with Interrupt, an event on this I/O can generate an external interrupt request to the CPU.

Each pin can independently generate an interrupt request. The interrupt sensitivity is independently programmable using the sensitivity bits in the EICR register.

Each external interrupt vector is linked to a dedicated group of I/O port pins (see pinout description and interrupt section). If several input pins are selected simultaneously as interrupt source, these are logically ANDed. For this reason if one of the interrupt pins is tied low, it may mask the others.

External interrupts are hardware interrupts. Fetching the corresponding interrupt vector automatically clears the request latch. Changing the sensitivity of a particular external interrupt clears this pending interrupt. This can be used to clear unwanted pending interrupts.

Spurious interrupts

When enabling/disabling an external interrupt by setting/resetting the related OR register bit, a spurious interrupt is generated if the pin level is low and its edge sensitivity includes falling/rising edge. This is due to the edge detector input which is switched to '1' when the external interrupt is disabled by the OR register.

To avoid this unwanted interrupt, a "safe" edge sensitivity (rising edge for enabling and falling edge for disabling) has to be selected before changing the OR register bit and configuring the appropriate sensitivity again.

Caution: In case a pin level change occurs during these operations (asynchronous signal input), as interrupts are generated according to the current sensitivity, it is advised to disable all interrupts before and to reenable them after the complete previous sequence in order to avoid an external interrupt occurring on the unwanted edge.

This corresponds to the following steps:

1. To enable an external interrupt:
   – set the interrupt mask with the SIM instruction (in cases where a pin level change could occur)
   – select rising edge
   – enable the external interrupt through the OR register
   – select the desired sensitivity if different from rising edge
   – reset the interrupt mask with the RIM instruction (in cases where a pin level change could occur)
2. To disable an external interrupt:
   – set the interrupt mask with the SIM instruction SIM (in cases where a pin level change could occur)
   – select falling edge
   – disable the external interrupt through the OR register
   – select rising edge

– reset the interrupt mask with the RIM instruction (in cases where a pin level change could occur)

Output Modes

The output configuration is selected by setting the corresponding DDR register bit. In this case, writing the DR register applies this digital value to the I/O pin through the latch. Then reading the DR register returns the previously stored value.

Two different output modes can be selected by software through the OR register: Output push-pull and open-drain.

DR register value and output pin status:

DR	Push-pull	Open-drain
0	V_{SS}	Vss
1	V_{DD}	Floating

Note: When switching from input to output mode, the DR register has to be written first to drive the correct level on the pin as soon as the port is configured as an output.

10.2.2 Alternate Functions

When an on-chip peripheral is configured to use a pin, the alternate function is automatically selected. This alternate function takes priority over the standard I/O programming under the following conditions:

– When the signal is coming from an on-chip peripheral, the I/O pin is automatically configured in output mode (push-pull or open drain according to the peripheral).

– When the signal is going to an on-chip peripheral, the I/O pin must be configured in floating input mode. In this case, the pin state is also digitally readable by addressing the DR register.

Notes:

– Input pull-up configuration can cause unexpected value at the input of the alternate peripheral input.

– When an on-chip peripheral use a pin as input and output, this pin has to be configured in input floating mode.

I/O PORTS (Cont'd)

Figure 29. I/O Port General Block Diagram

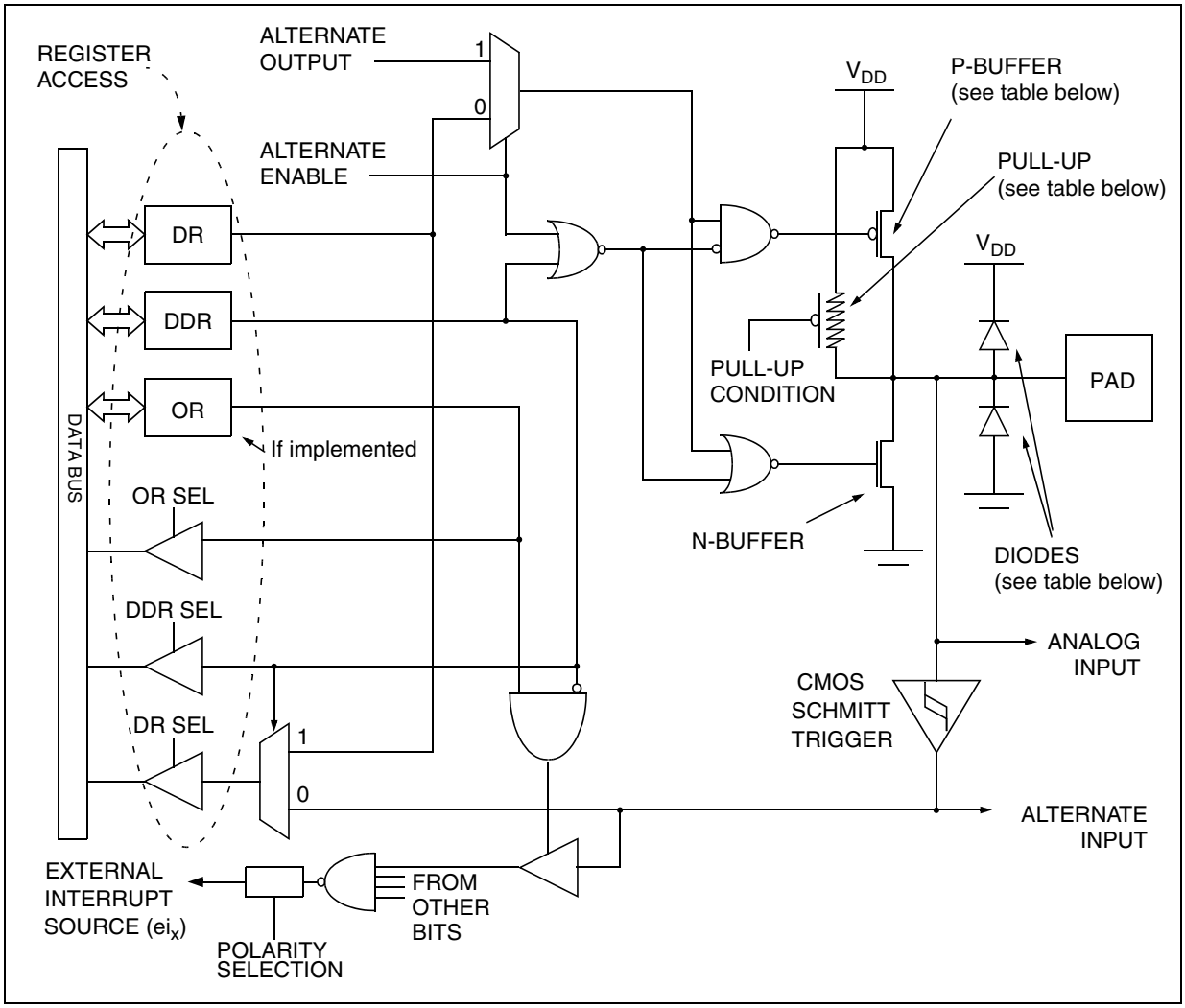

Table 9. I/O Port Mode Options

Configuration Mode		Pull-Up	P-Buffer	Diodes	
				to V_{DD}	to V_{SS}
Input	Floating with/without Interrupt	Off	Off	On	On
	Pull-up with/without Interrupt	On			
Output	Push-pull	Off	On		
	Open Drain (logic level)		Off		

Legend: NI - not implemented
Off - implemented not activated
On - implemented and activated

I/O PORTS (Cont'd)

Table 10. I/O Port Configurations

	Hardware Configuration
INPUT [1]	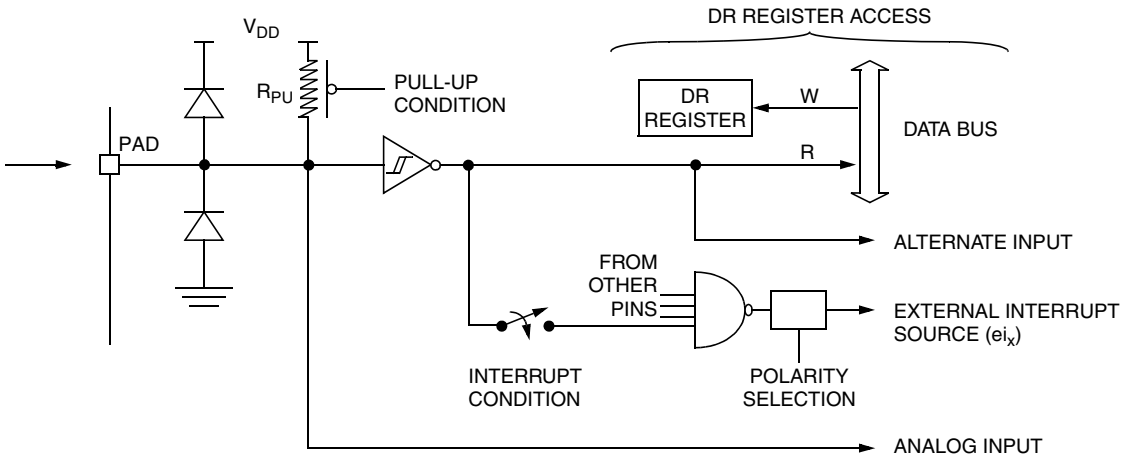
OPEN-DRAIN OUTPUT [2]	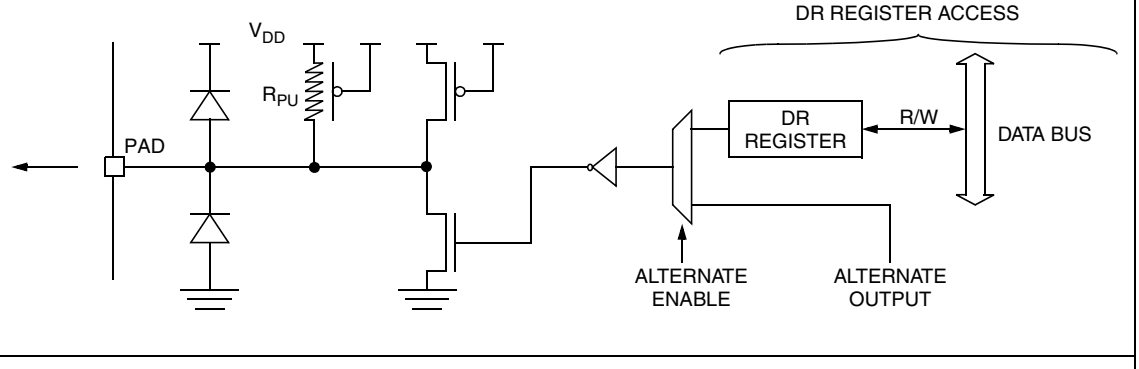
PUSH-PULL OUTPUT [2]	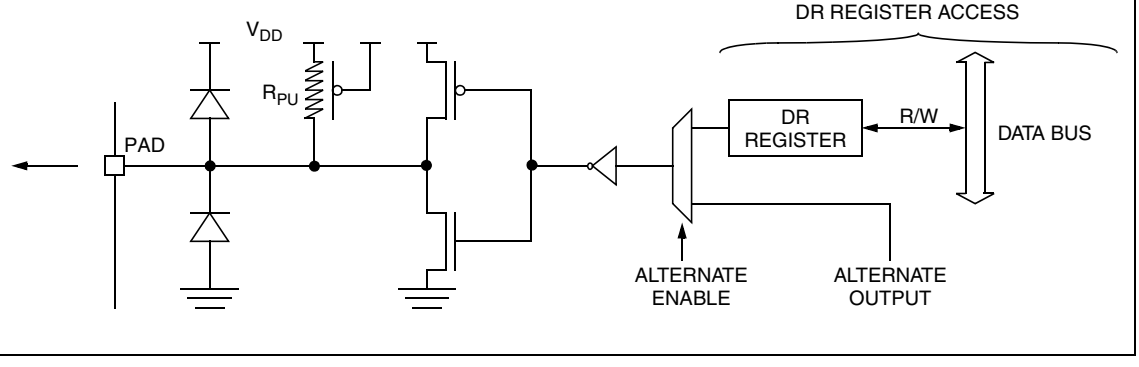

Notes:

1. When the I/O port is in input configuration and the associated alternate function is enabled as an output, reading the DR register will read the alternate function output status.
2. When the I/O port is in output configuration and the associated alternate function is enabled as an input, the alternate function reads the pin status given by the DR register content.

I/O PORTS (Cont'd)

CAUTION: The alternate function must not be activated as long as the pin is configured as input with interrupt, in order to avoid generating spurious interrupts.

Analog alternate function

When the pin is used as an ADC input, the I/O must be configured as floating input. The analog multiplexer (controlled by the ADC registers) switches the analog voltage present on the selected pin to the common analog rail which is connected to the ADC input.

It is recommended not to change the voltage level or loading on any port pin while conversion is in progress. Furthermore it is recommended not to have clocking pins located close to a selected analog pin.

WARNING: The analog input voltage level must be within the limits stated in the absolute maximum ratings.

10.3 UNUSED I/O PINS

Unused I/O pins must be connected to fixed voltage levels. Refer to .

10.4 LOW POWER MODES

Mode	Description
WAIT	No effect on I/O ports. External interrupts cause the device to exit from WAIT mode.
HALT	No effect on I/O ports. External interrupts cause the device to exit from HALT mode.

10.5 INTERRUPTS

The external interrupt event generates an interrupt if the corresponding configuration is selected with DDR and OR registers and the interrupt mask in the CC register is not active (RIM instruction).

Interrupt Event	Event Flag	Enable Control Bit	Exit from Wait	Exit from Halt
External interrupt on selected external event	-	DDRx ORx	Yes	Yes

10.6 I/O PORT IMPLEMENTATION

The hardware implementation on each I/O port depends on the settings in the DDR and OR registers and specific feature of the I/O port such as ADC Input.

Switching these I/O ports from one state to another should be done in a sequence that prevents unwanted side effects. Recommended safe transitions are illustrated in Other transitions are potentially risky and should be avoided, since they are likely to present unwanted side-effects such as spurious interrupt generation.

Figure 30. Interrupt I/O Port State Transitions

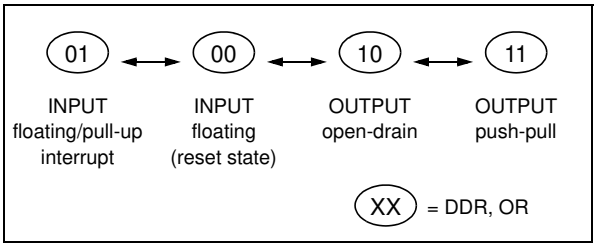

The I/O port register configurations are summarised as follows.

Table 11. Port Configuration

Port	Pin name	Input (DDR=0)		Output (DDR=1)	
		OR = 0	OR = 1	OR = 0	OR = 1
Port A	PA7	floating	pull-up interrupt	open drain	push-pull
	PA6:1	floating	pull-up	open drain	push-pull
	PA0	floating	pull-up interrupt	open drain	push-pull
Port B	PB4	floating	pull-up	open drain	push-pull
	PB3	floating	pull-up interrupt	open drain	push-pull
	PB2:1	floating	pull-up	open drain	push-pull
	PB0	floating	pull-up interrupt	open drain	push-pull

I/O PORTS (Cont'd)

Table 12. I/O Port Register Map and Reset Values

Address (Hex.)	Register Label	7	6	5	4	3	2	1	0
0000h	**PADR** Reset Value	MSB 0	0	0	0	0	0	0	LSB 0
0001h	**PADDR** Reset Value	MSB 0	0	0	0	0	0	0	LSB 0
0002h	**PAOR** Reset Value	MSB 0	1	0	0	0	0	0	LSB 0
0003h	**PBDR** Reset Value	MSB 1	1	1	0	0	0	0	LSB 0
0004h	**PBDDR** Reset Value	MSB 0	0	0	0	0	0	0	LSB 0
0005h	**PBOR** Reset Value	MSB 0	0	0	0	0	0	0	LSB 0

11 ON-CHIP PERIPHERALS

11.1 LITE TIMER (LT)

11.1.1 Introduction

The Lite Timer can be used for general-purpose timing functions. It is based on a free-running 8-bit upcounter with two software-selectable timebase periods, an 8-bit input capture register and watchdog function.

11.1.2 Main Features

- Realtime Clock
  - 8-bit upcounter
  - 1 ms or 2 ms timebase period (@ 8 MHz f_{OSC})
  - Maskable timebase interrupt
- Input Capture
  - 8-bit input capture register (LTICR)
  - Maskable interrupt with wakeup from Halt Mode capability
- Watchdog
  - Enabled by hardware or software (configurable by option byte)
  - Optional reset on HALT instruction (configurable by option byte)
  - Automatically resets the device unless disable bit is refreshed
  - Software reset (Forced Watchdog reset)
  - Watchdog reset status flag

Figure 31. Lite Timer Block Diagram

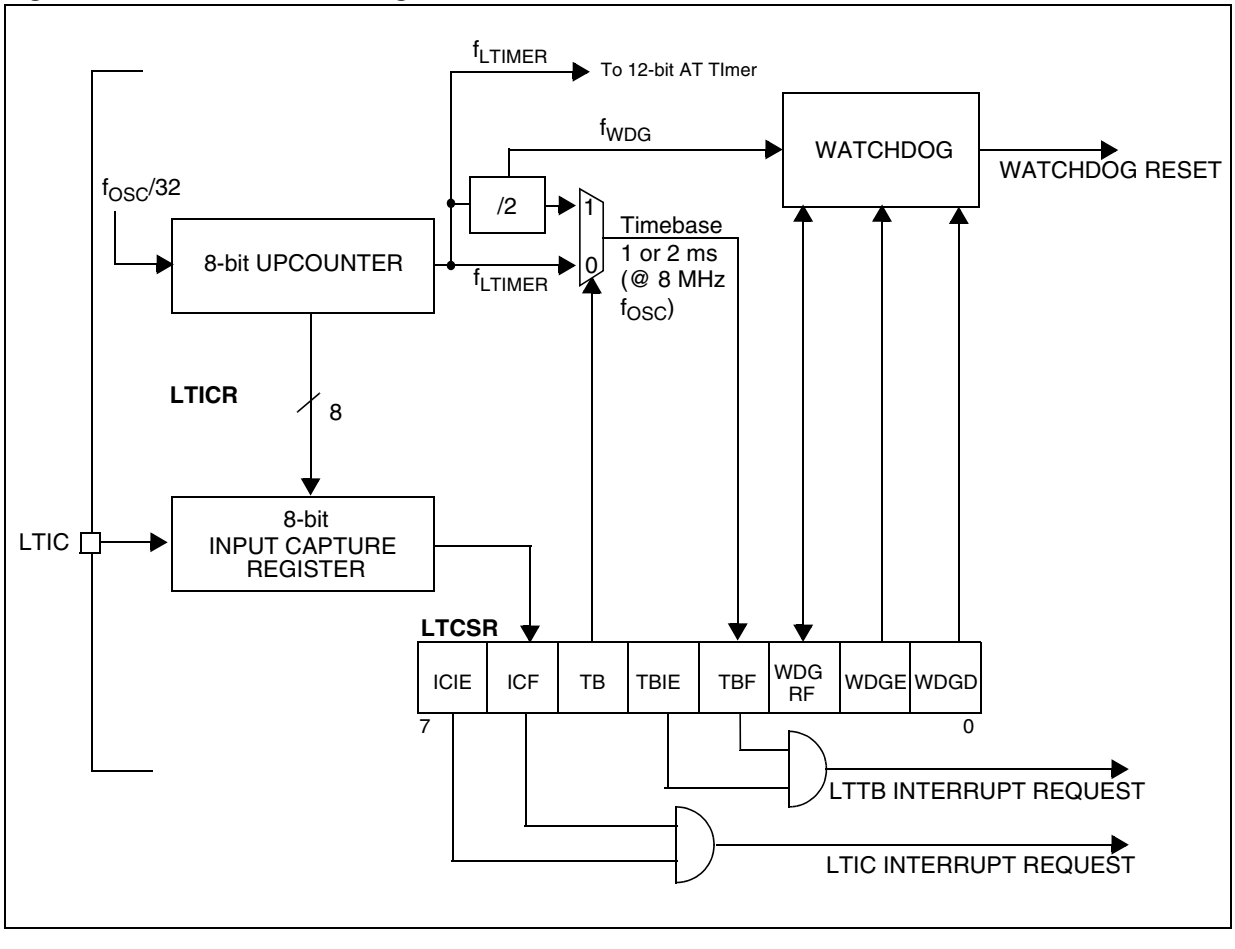

LITE TIMER (Cont'd)

11.1.3 Functional Description

The value of the 8-bit counter cannot be read or written by software. After an MCU reset, it starts incrementing from 0 at a frequency of $f_{OSC}/32$. A counter overflow event occurs when the counter rolls over from F9h to 00h. If f_{OSC} = 8 MHz, then the time period between two counter overflow events is 1 ms. This period can be doubled by setting the TB bit in the LTCSR register.

When the timer overflows, the TBF bit is set by hardware and an interrupt request is generated if the TBIE is set. The TBF bit is cleared by software reading the LTCSR register.

11.1.3.1 Watchdog

The watchdog is enabled using the WDGE bit. The normal Watchdog timeout is 2ms (@ = 8 MHz f_{OSC}), after which it then generates a reset.

To prevent this watchdog reset occuring, software must set the WDGD bit. The WDGD bit is cleared by hardware after t_{WDG}. This means that software must write to the WDGD bit at regular intervals to prevent a watchdog reset occurring. Refer to ure 32.

If the watchdog is not enabled immediately after reset, the first watchdog timeout will be shorter than 2ms, because this period is counted starting from reset. Moreover, if a 2ms period has already elapsed after the last MCU reset, the watchdog reset will take place as soon as the WDGE bit is set. For these reasons, it is recommended to enable the Watchdog immediately after reset or else to set the WDGD bit before the WGDE bit so a watchdog reset will not occur for at least 2ms.

A Watchdog reset can be forced at any time by setting the WDGRF bit. To generate a forced watchdog reset, first watchdog has to be activated by setting the WDGE bit and then the WDGRF bit has to be set.

The WDGRF bit also acts as a flag, indicating that the Watchdog was the source of the reset. It is automatically cleared after it has been read.

Caution: When the WDGRF bit is set, software must clear it, otherwise the next time the watchdog is enabled (by hardware or software), the microcontroller will be immediately reset.

Hardware Watchdog Option

If Hardware Watchdog is selected by option byte, the watchdog is always active and the WDGE bit in the LTCSR is not used.

Refer to the Option Byte description in the "device configuration and ordering information" section.

Using Halt Mode with the Watchdog (option)

If the Watchdog reset on HALT option is not selected by option byte, the Halt mode can be used when the watchdog is enabled.

In this case, the HALT instruction stops the oscillator. When the oscillator is stopped, the Lite Timer stops counting and is no longer able to generate a Watchdog reset until the microcontroller receives an external interrupt or a reset.

If an external interrupt is received, the WDG restarts counting after 256 CPU clocks. If a reset is generated, the Watchdog is disabled (reset state).

If Halt mode with Watchdog is enabled by option byte (No watchdog reset on HALT instruction), it is recommended before executing the HALT instruction to refresh the WDG counter, to avoid an unexpected WDG reset immediately after waking up the microcontroller.

LITE TIMER (Cont'd)

Figure 32. Watchdog Timing Diagram

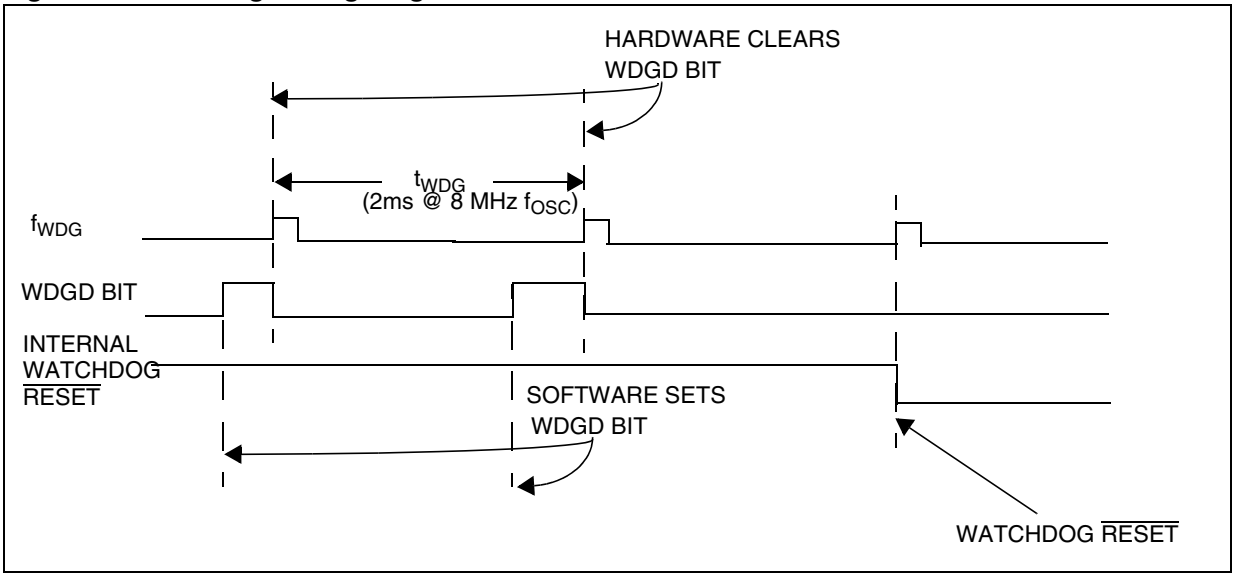

LITE TIMER (Cont'd)

Input Capture

The 8-bit input capture register is used to latch the free-running upcounter after a rising or falling edge is detected on the LTIC pin. When an input capture occurs, the ICF bit is set and the LTICR register contains the value of the free-running upcounter. An interrupt is generated if the ICIE bit is set. The ICF bit is cleared by reading the LTICR register.

The LTICR is a read only register and always contains the data from the last input capture. Input capture is inhibited if the ICF bit is set.

11.1.4 Low Power Modes

Mode	Description
SLOW	No effect on Lite timer (this peripheral is driven directly by $f_{OSC}/32$)
WAIT	No effect on Lite timer
ACTIVE HALT	No effect on Lite timer
HALT	Lite timer stops counting

11.1.5 Interrupts

Interrupt Event	Event Flag	Enable Control Bit	Exit from Wait	Exit from Halt	Exit from Active-Halt
Timebase Event	TBF	TBIE	Yes	No	Yes
IC Event	ICF	ICIE			No

Note: The TBF and ICF interrupt events are connected to separate interrupt vectors (see Interrupts chapter).

Timebase and IC events generate an interrupt if the enable bit is set in the LTCSR register and the interrupt mask in the CC register is reset (RIM instruction).

Figure 33. Input Capture Timing Diagram

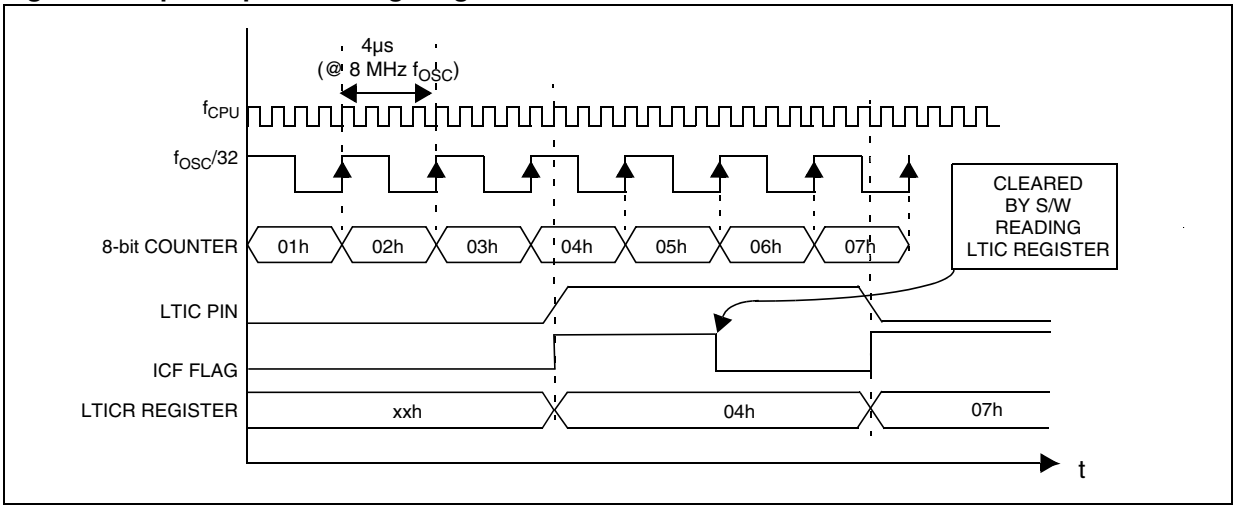

LITE TIMER (Cont'd)

11.1.6 Register Description

LITE TIMER CONTROL/STATUS REGISTER (LTCSR)
Read / Write
Reset Value: 0x00 0000 (x0h)

7							0
ICIE	ICF	TB	TBIE	TBF	WDGR	WDGE	WDGD

Bit 7 = **ICIE** *Interrupt Enable*
This bit is set and cleared by software.
0: Input Capture (IC) interrupt disabled
1: Input Capture (IC) interrupt enabled

Bit 6 = **ICF** *Input Capture Flag*
This bit is set by hardware and cleared by software by reading the LTICR register. Writing to this bit does not change the bit value.
0: No input capture
1: An input capture has occurred

Note: After an MCU reset, software must initialise the ICF bit by reading the LTICR register

Bit 5 = **TB** *Timebase period selection*
This bit is set and cleared by software.
0: Timebase period = t_{OSC} * 8000 (1ms @ 8 MHz)
1: Timebase period = t_{OSC} * 16000 (2ms @ 8 MHz)

Bit 4 = **TBIE** *Timebase Interrupt enable*
This bit is set and cleared by software.
0: Timebase (TB) interrupt disabled
1: Timebase (TB) interrupt enabled

Bit 3 = **TBF** *Timebase Interrupt Flag*
This bit is set by hardware and cleared by software reading the LTCSR register. Writing to this bit has no effect.
0: No counter overflow
1: A counter overflow has occurred

Bit 2 = **WDGRF** *Force Reset/ Reset Status Flag*
This bit is used in two ways: it is set by software to force a watchdog reset. It is set by hardware when a watchdog reset occurs and cleared by hardware or by software. It is cleared by hardware only when an LVD reset occurs. It can be cleared by software after a read access to the LTCSR register.
0: No watchdog reset occurred.
1: Force a watchdog reset (write), or, a watchdog reset occurred (read).

Bit 1 = **WDGE** *Watchdog Enable*
This bit is set and cleared by software.
0: Watchdog disabled
1: Watchdog enabled

Bit 0 = **WDGD** *Watchdog Reset Delay*
This bit is set by software. It is cleared by hardware at the end of each t_{WDG} period.
0: Watchdog reset not delayed
1: Watchdog reset delayed

LITE TIMER INPUT CAPTURE REGISTER (LTICR)
Read only
Reset Value: 0000 0000 (00h)

7							0
ICR7	ICR6	ICR5	ICR4	ICR3	ICR2	ICR1	ICR0

Bit 7:0 = **ICR[7:0]** *Input Capture Value*
These bits are read by software and cleared by hardware after a reset. If the ICF bit in the LTCSR is cleared, the value of the 8-bit up-counter will be captured when a rising or falling edge occurs on the LTIC pin.

Table 13. Lite Timer Register Map and Reset Values

Address (Hex.)	Register Label	7	6	5	4	3	2	1	0
0B	**LTCSR** Reset Value	ICIE 0	ICF x	TB 0	TBIE 0	TBF 0	WDGRF 0	WDGE 0	WDGD 0
0C	**LTICR** Reset Value	ICR7 0	ICR6 0	ICR5 0	ICR4 0	ICR3 0	ICR2 0	ICR1 0	ICR0 0

11.2 12-BIT AUTORELOAD TIMER (AT)

11.2.1 Introduction

The 12-bit Autoreload Timer can be used for general-purpose timing functions. It is based on a free-running 12-bit upcounter with a PWM output channel.

11.2.2 Main Features

- 12-bit upcounter with 12-bit autoreload register (ATR)
- Maskable overflow interrupt
- PWM signal generator
- Frequency range 2KHz-4MHz (@ 8 MHz f_{CPU})
  - Programmable duty-cycle
  - Polarity control
  - Maskable Compare interrupt
- Output Compare Function

Figure 34. Block Diagram

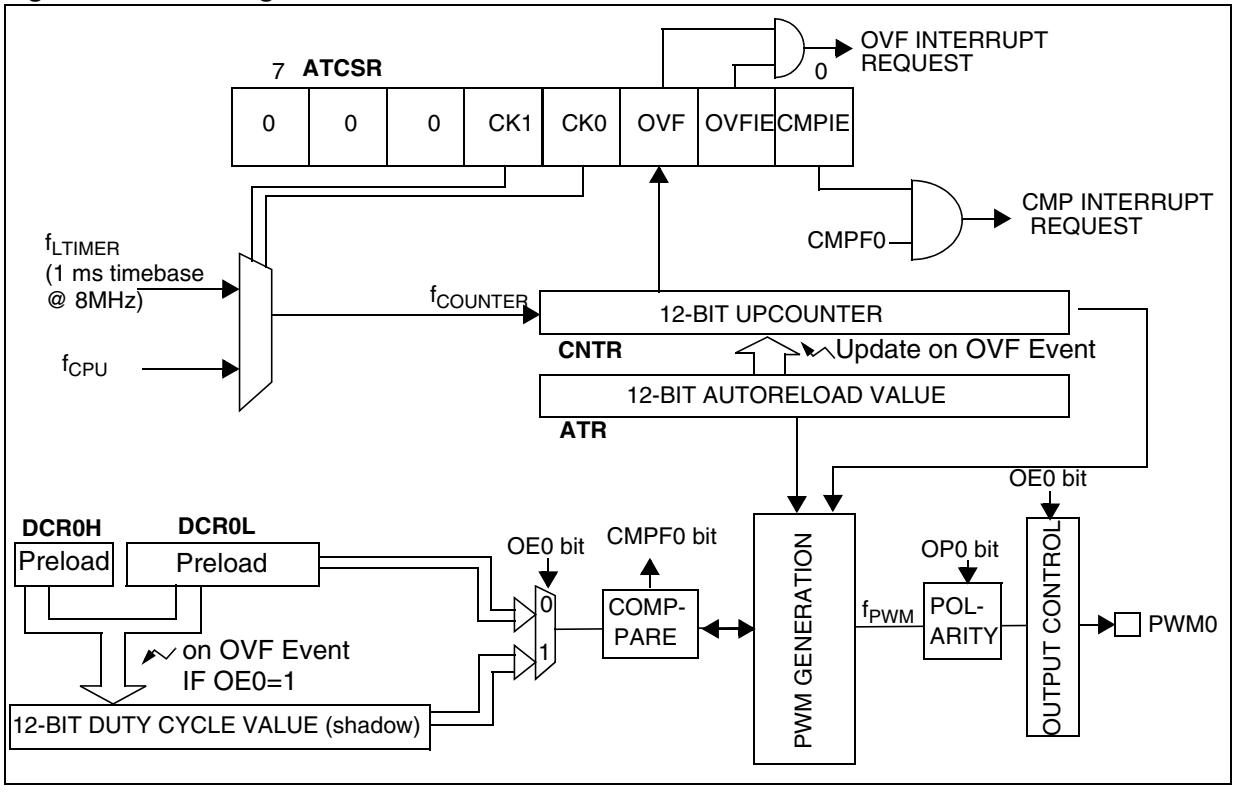

12-BIT AUTORELOAD TIMER (Cont'd)

11.2.3 Functional Description

PWM Mode

This mode allows a Pulse Width Modulated signals to be generated on the PWM0 output pin with minimum core processing overhead. The PWM0 output signal can be enabled or disabled using the OE0 bit in the PWMCR register. When this bit is set the PWM I/O pin is configured as output push-pull alternate function.

Note: CMPF0 is available in PWM mode (see PWM0CSR description on).

PWM Frequency and Duty Cycle

The PWM signal frequency (f_{PWM}) is controlled by the counter period and the ATR register value.

$$f_{PWM} = f_{COUNTER} / (4096 - ATR)$$

Following the above formula, if f_{CPU} is 8 MHz, the maximum value of f_{PWM} is 4 Mhz (ATR register value = 4094), and the minimum value is 2 kHz (ATR register value = 0).

Note: The maximum value of ATR is 4094 because it must be lower than the DCR value which must be 4095 in this case.

At reset, the counter starts counting from 0.

Software must write the duty cycle value in the DCR0H and DCR0L preload registers. The DCR0H register must be written first. See caution below.

When a upcounter overflow occurs (OVF event), the ATR value is loaded in the upcounter, the preloaded Duty cycle value is transferred to the Duty Cycle register and the PWM0 signal is set to a high level. When the upcounter matches the DCRx value the PWM0 signals is set to a low level. To obtain a signal on the PWM0 pin, the contents of the DCR0 register must be greater than the contents of the ATR register.

The polarity bit can be used to invert the output signal.

The maximum available resolution for the PWM0 duty cycle is:

$$\text{Resolution} = 1 / (4096 - ATR)$$

Note: To get the maximum resolution (1/4096), the ATR register must be 0. With this maximum resolution and assuming that DCR=ATR, a 0% or 100% duty cycle can be obtained by changing the polarity .

Caution: As soon as the DCR0H is written, the compare function is disabled and will start only when the DCR0L value is written. If the DCR0H write occurs just before the compare event, the signal on the PWM output may not be set to a low level. In this case, the DCRx register should be updated just after an OVF event. If the DCR and ATR values are close, then the DCRx register shouldbe updated just before an OVF event, in order not to miss a compare event and to have the right signal applied on the PWM output.

Figure 35. PWM Function

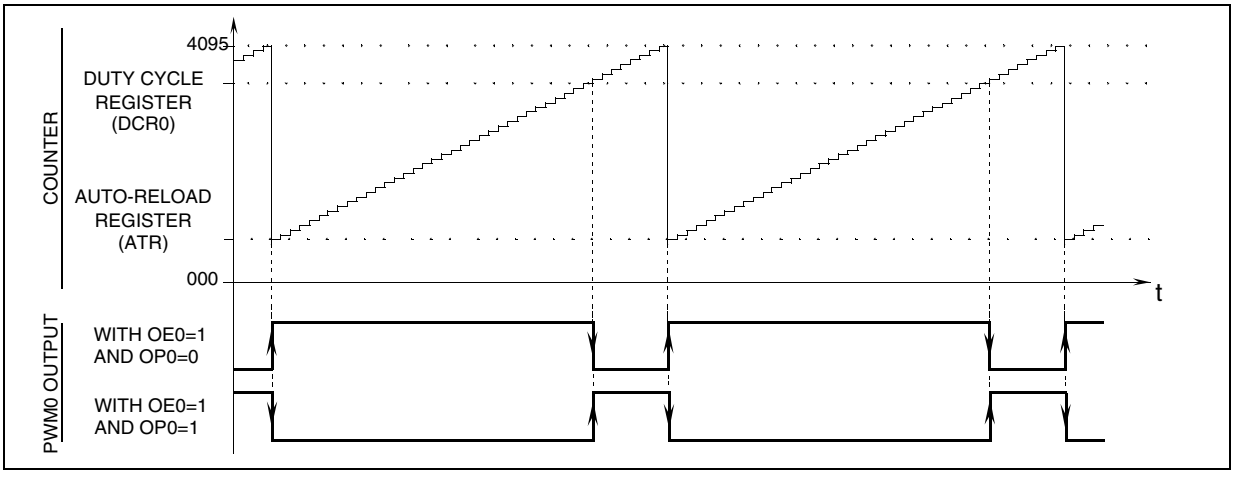

12-BIT AUTORELOAD TIMER (Cont'd)

Figure 36. PWM Signal Example

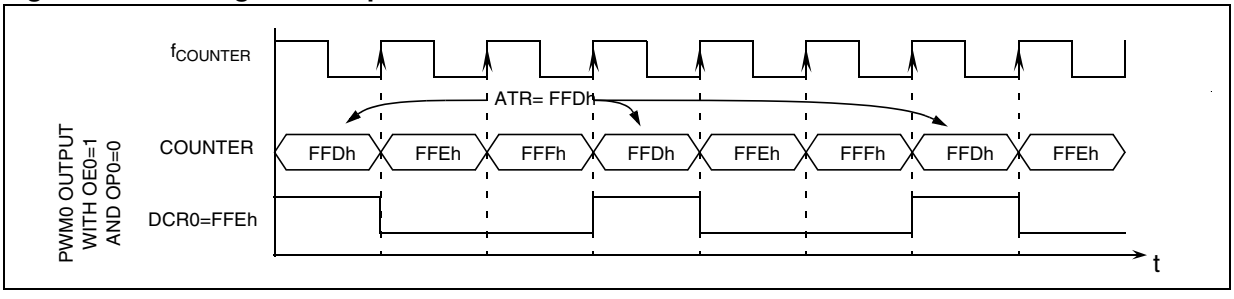

Output Compare Mode

To use this function, the OE bit must be 0, otherwise the compare is done with the shadow register instead of the DCRx register. Software must then write a 12-bit value in the DCR0H and DCR0L registers. This value will be loaded immediately (without waiting for an OVF event).

The DCR0H must be written first, the output compare function starts only when the DCR0L value is written.

When the 12-bit upcounter (CNTR) reaches the value stored in the DCR0H and DCR0L registers, the CMPF0 bit in the PWM0CSR register is set and an interrupt request is generated if the CMPIE bit is set.

Note: The output compare function is only available for DCRx values other than 0 (reset value).

Caution: At each OVF event, the DCRx value is written in a shadow register, even if the DCR0L value has not yet been written (in this case, the shadow register will contain the new DCR0H value and the old DCR0L value), then:

– If OE=1 (PWM mode): the compare is done between the timer counter and the shadow register (and not DCRx)

– if OE=0 (OCMP mode): the compare is done between the timer counter and DCRx. There is no PWM signal.

The compare between DCRx or the shadow register and the timer counter is locked until DCR0L is written.

11.2.4 Low Power Modes

Mode	Description
SLOW	The input frequency is divided by 32
WAIT	No effect on AT timer
ACTIVE-HALT	AT timer halted except if CK0=1, CK1=0 and OVFIE=1
HALT	AT timer halted

11.2.5 Interrupts

Interrupt Event [1)]	Event Flag	Enable Control Bit	Exit from Wait	Exit from Halt	Exit from Active-Halt
Overflow Event	OVF	OVFIE	Yes	No	Yes[2)]
CMP Event	CMPFx	CMPIE	Yes	No	No

Notes:

1. The interrupt events are connected to separate interrupt vectors (see Interrupts chapter).
They generate an interrupt if the enable bit is set in the ATCSR register and the interrupt mask in the CC register is reset (RIM instruction).

2. only if CK0=1and CK1=0

12-BIT AUTORELOAD TIMER (Cont'd)

11.2.6 Register Description

TIMER CONTROL STATUS REGISTER (ATCSR)
Read / Write
Reset Value: 0000 0000 (00h)

7							0
0	0	0	CK1	CK0	OVF	OVFIE	CMPIE

Bit 7:5 = Reserved, must be kept cleared.

Bit 4:3 = **CK[1:0]** *Counter Clock Selection.*
These bits are set and cleared by software and cleared by hardware after a reset. They select the clock frequency of the counter.

Counter Clock Selection	CK1	CK0
OFF	0	0
f_{LTIMER} (1 ms timebase @ 8 MHz)	0	1
f_{CPU}	1	0
Reserved	1	1

Bit 2 = **OVF** *Overflow Flag.*
This bit is set by hardware and cleared by software by reading the ATCSR register. It indicates the transition of the counter from FFFh to ATR value.
0: No counter overflow occurred
1: Counter overflow occurred

Caution:
When set, the OVF bit stays high for 1 $f_{COUNTER}$ cycle, (up to 1ms depending on the clock selection).

Bit 1 = **OVFIE** *Overflow Interrupt Enable.*
This bit is read/write by software and cleared by hardware after a reset.
0: OVF interrupt disabled
1: OVF interrupt enabled

Bit 0 = **CMPIE** *Compare Interrupt Enable.*
This bit is read/write by software and clear by hardware after a reset. It allows to mask the interrupt generation when CMPF bit is set.
0: CMPF interrupt disabled
1: CMPF interrupt enabled

COUNTER REGISTER HIGH (CNTRH)
Read only
Reset Value: 0000 0000 (00h)

15							8
0	0	0	0	CN11	CN10	CN9	CN8

COUNTER REGISTER LOW (CNTRL)
Read only
Reset Value: 0000 0000 (00h)

7							0
CN7	CN6	CN5	CN4	CN3	CN2	CN1	CN0

Bits 15:12 = Reserved, must be kept cleared.

Bits 11:0 = **CNTR[11:0]** *Counter Value.*
This 12-bit register is read by software and cleared by hardware after a reset. The counter is incremented continuously as soon as a counter clock is selected. To obtain the 12-bit value, software should read the counter value in two consecutive read operations. The CNTRH register can be incremented between the two reads, and in order to be accurate when $f_{TIMER}=f_{CPU}$, the software should take this into account when CNTRL and CNTRH are read. If CNTRL is close to its highest value, CNTRH could be incremented before it is read.

When a counter overflow occurs, the counter restarts from the value specified in the ATR register.

12-BIT AUTORELOAD TIMER (Cont'd)

AUTO RELOAD REGISTER (ATRH)
Read / Write
Reset Value: 0000 0000 (00h)

15							8
0	0	0	0	ATR11	ATR10	ATR9	ATR8

AUTO RELOAD REGISTER (ATRL)
Read / Write
Reset Value: 0000 0000 (00h)

7							0
ATR7	ATR6	ATR5	ATR4	ATR3	ATR2	ATR1	ATR0

Bits 15:12 = Reserved, must be kept cleared.

Bits 11:0 = **ATR[11:0]** *Autoreload Register.*
This is a 12-bit register which is written by software. The ATR register value is automatically loaded into the upcounter when an overflow occurs. The register value is used to set the PWM frequency.

PWM0 DUTY CYCLE REGISTER HIGH (DCR0H)
Read / Write
Reset Value: 0000 0000 (00h)

15							8
0	0	0	0	DCR11	DCR10	DCR9	DCR8

PWM0 DUTY CYCLE REGISTER LOW (DCR0L)
Read / Write
Reset Value: 0000 0000 (00h)

7							0
DCR7	DCR6	DCR5	DCR4	DCR3	DCR2	DCR1	DCR0

Bits 15:12 = Reserved, must be kept cleared.

Bits 11:0 = **DCR[11:0]** *PWMx Duty Cycle Value*
This 12-bit value is written by software. The high register must be written first.

In PWM mode (OE0=1 in the PWMCR register) the DCR[11:0] bits define the duty cycle of the PWM0 output signal (see Figure 35). In Output Compare mode, (OE0=0 in the PWMCR register) they define the value to be compared with the 12-bit upcounter value.

PWM0 CONTROL/STATUS REGISTER (PWM0CSR)
Read / Write
Reset Value: 0000 0000 (00h)

7							0
0	0	0	0	0	0	OP0	CMPF0

Bit 7:2= Reserved, must be kept cleared.

Bit 1 = **OP0** *PWM0 Output Polarity.*
This bit is read/write by software and cleared by hardware after a reset. This bit selects the polarity of the PWM0 signal.
0: The PWM0 signal is not inverted.
1: The PWM0 signal is inverted.

Bit 0 = **CMPF0** PWM0 *Compare Flag.*
This bit is set by hardware and cleared by software by reading the PWM0CSR register. It indicates that the upcounter value matches the DCR0 register value.
0: Upcounter value does not match DCR value.
1: Upcounter value matches DCR value.

12-BIT AUTORELOAD TIMER (Cont'd)

PWM OUTPUT CONTROL REGISTER (PWMCR)
Read/Write
Reset Value: 0000 0000 (00h)

7							0
0	0	0	0	0	0	0	OE0

Bits 7:1 = Reserved, must be kept cleared.

Bit 0 = **OE0** *PWM0 Output enable*.
This bit is set and cleared by software.
0: PWM0 output Alternate Function disabled (I/O pin free for general purpose I/O)
1: PWM0 output enabled

Table 14. Register Map and Reset Values

Address (Hex.)	Register Label	7	6	5	4	3	2	1	0
0D	**ATCSR** Reset Value	0	0	0	CK1 0	CK0 0	OVF 0	OVFIE 0	CMPIE 0
0E	**CNTRH** Reset Value	0	0	0	0	CN11 0	CN10 0	CN9 0	CN8 0
0F	**CNTRL** Reset Value	CN7 0	CN6 0	CN5 0	CN4 0	CN3 0	CN2 0	CN1 0	CN0 0
10	**ATRH** Reset Value	0	0	0	0	ATR11 0	ATR10 0	ATR9 0	ATR8 0
11	**ATRL** Reset Value	ATR7 0	ATR6 0	ATR5 0	ATR4 0	ATR3 0	ATR2 0	ATR1 0	ATR0 0
12	**PWMCR** Reset Value	0	0	0	0	0	0	0	OE0 0
13	**PWM0CSR** Reset Value	0	0	0	0	0	0	OP 0	CMPF0 0
17	**DCR0H** Reset Value	0	0	0	0	DCR11 0	DCR10 0	DCR9 0	DCR8 0
18	**DCR0L** Reset Value	DCR7 0	DCR6 0	DCR5 0	DCR4 0	DCR3 0	DCR2 0	DCR1 0	DCR0 0

11.3 SERIAL PERIPHERAL INTERFACE (SPI)

11.3.1 Introduction

The Serial Peripheral Interface (SPI) allows full-duplex, synchronous, serial communication with external devices. An SPI system may consist of a master and one or more slaves however the SPI interface can not be a master in a multi-master system.

11.3.2 Main Features

- Full duplex synchronous transfers (on 3 lines)
- Simplex synchronous transfers (on 2 lines)
- Master or slave operation
- Six master mode frequencies (f_{CPU}/4 max.)
- f_{CPU}/2 max. slave mode frequency (see note)
- $\overline{SS}$ Management by software or hardware
- Programmable clock polarity and phase
- End of transfer interrupt flag
- Write collision, Master Mode Fault and Overrun flags

Note: In slave mode, continuous transmission is not possible at maximum frequency due to the software overhead for clearing status flags and to initiate the next transmission sequence.

11.3.3 General Description

shows the serial peripheral interface (SPI) block diagram. There are 3 registers:

– SPI Control Register (SPICR)

– SPI Control/Status Register (SPICSR)

– SPI Data Register (SPIDR)

The SPI is connected to external devices through 3 pins:

– MISO: Master In / Slave Out data

– MOSI: Master Out / Slave In data

– SCK: Serial Clock out by SPI masters and input by SPI slaves

– $\overline{SS}$: Slave select:
This input signal acts as a 'chip select' to let the SPI master communicate with slaves individually and to avoid contention on the data lines. Slave $\overline{SS}$ inputs can be driven by standard I/O ports on the master MCU.

Figure 37. Serial Peripheral Interface Block Diagram

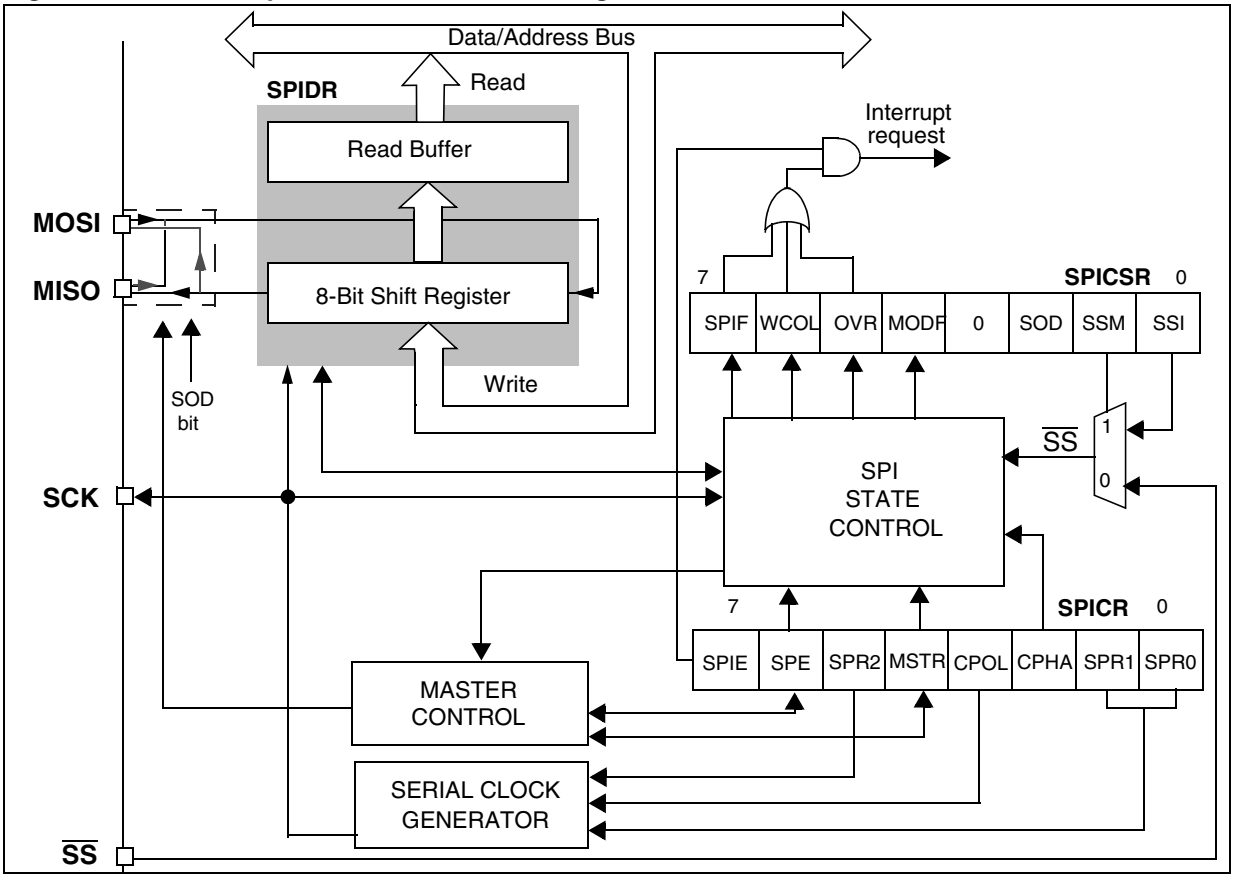

SERIAL PERIPHERAL INTERFACE (Cont'd)

11.3.3.1 Functional Description

A basic example of interconnections between a single master and a single slave is illustrated in .

The MOSI pins are connected together and the MISO pins are connected together. In this way data is transferred serially between master and slave (most significant bit first).

The communication is always initiated by the master. When the master device transmits data to a slave device via MOSI pin, the slave device responds by sending data to the master device via the MISO pin. This implies full duplex communication with both data out and data in synchronized with the same clock signal (which is provided by the master device via the SCK pin).

To use a single data line, the MISO and MOSI pins must be connected at each node (in this case only simplex communication is possible).

Four possible data/clock timing relationships may be chosen (see) but master and slave must be programmed with the same timing mode.

Figure 38. Single Master/ Single Slave Application

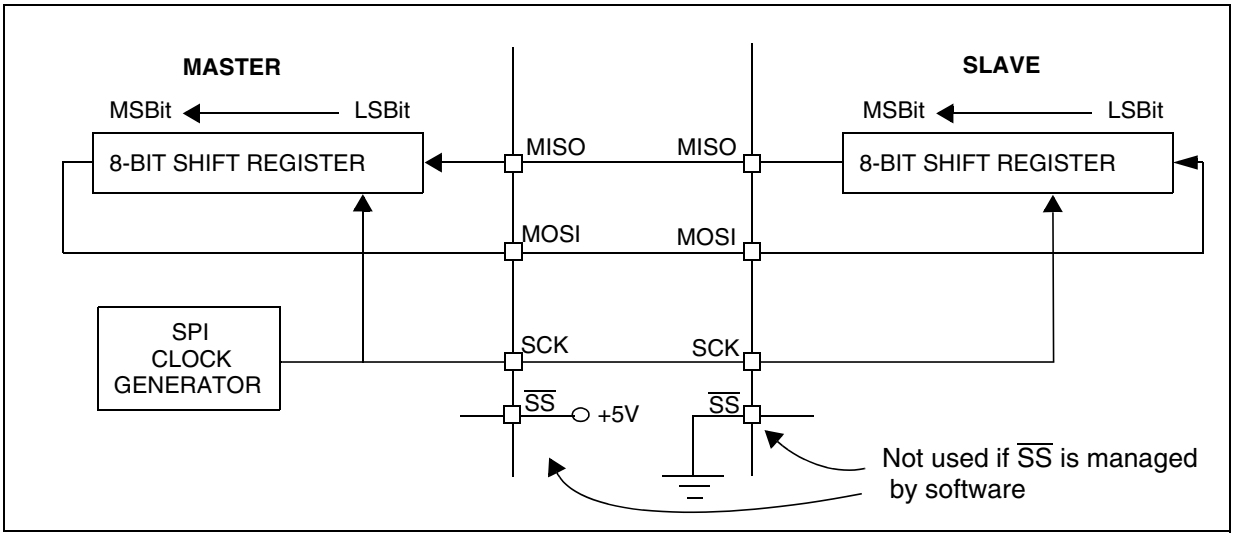

SERIAL PERIPHERAL INTERFACE (Cont'd)

11.3.3.2 Slave Select Management

As an alternative to using the $\overline{SS}$ pin to control the Slave Select signal, the application can choose to manage the Slave Select signal by software. This is configured by the SSM bit in the SPICSR register (see)

In software management, the external $\overline{SS}$ pin is free for other application uses and the internal $\overline{SS}$ signal level is driven by writing to the SSI bit in the SPICSR register.

In Master mode:

– $\overline{SS}$ internal must be held high continuously

In Slave Mode:

There are two cases depending on the data/clock timing relationship (see):

If CPHA=1 (data latched on 2nd clock edge):

– $\overline{SS}$ internal must be held low during the entire transmission. This implies that in single slave applications the $\overline{SS}$ pin either can be tied to V_{SS}, or made free for standard I/O by managing the $\overline{SS}$ function by software (SSM= 1 and SSI=0 in the in the SPICSR register)

If CPHA=0 (data latched on 1st clock edge):

– $\overline{SS}$ internal must be held low during byte transmission and pulled high between each byte to allow the slave to write to the shift register. If $\overline{SS}$ is not pulled high, a Write Collision error will occur when the slave writes to the shift register (see).

Figure 39. Generic $\overline{SS}$ Timing Diagram

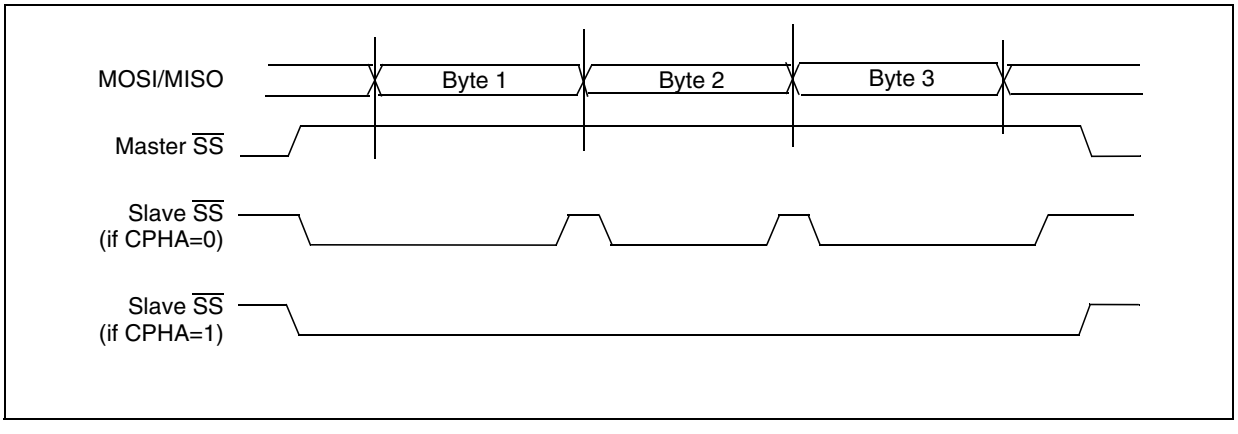

Figure 40. Hardware/Software Slave Select Management

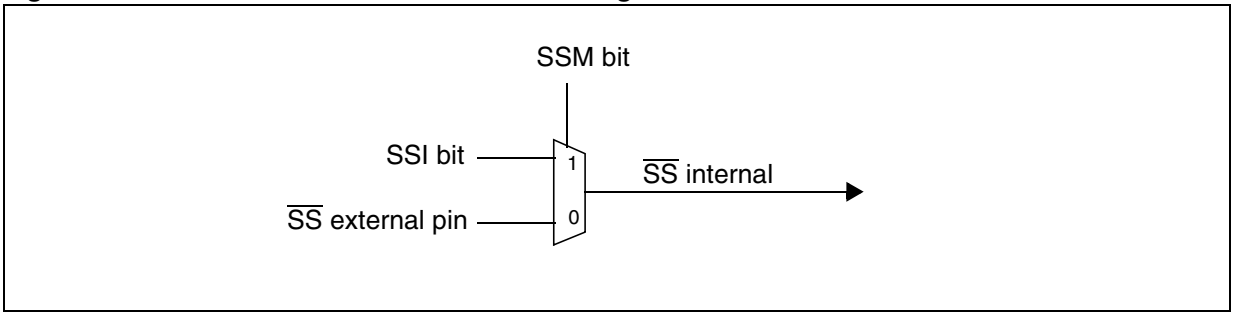

SERIAL PERIPHERAL INTERFACE (Cont'd)

11.3.3.3 Master Mode Operation

In master mode, the serial clock is output on the SCK pin. The clock frequency, polarity and phase are configured by software (refer to the description of the SPICSR register).

Note: The idle state of SCK must correspond to the polarity selected in the SPICSR register (by pulling up SCK if CPOL=1 or pulling down SCK if CPOL=0).

How to operate the SPI in master mode

To operate the SPI in master mode, perform the following steps in order:

1. Write to the SPICR register:
   - Select the clock frequency by configuring the SPR[2:0] bits.
   - Select the clock polarity and clock phase by configuring the CPOL and CPHA bits. 41 shows the four possible configurations.
     Note: The slave must have the same CPOL and CPHA settings as the master.
2. Write to the SPICSR register:
   - Either set the SSM bit and set the SSI bit or clear the SSM bit and tie the SS pin high for the complete byte transmit sequence.
3. Write to the SPICR register:
   - Set the MSTR and SPE bits
     Note: MSTR and SPE bits remain set only if SS is high.

Important note: if the SPICSR register is not written first, the SPICR register setting (MSTR bit) may be not taken into account.

The transmit sequence begins when software writes a byte in the SPIDR register.

11.3.3.4 Master Mode Transmit Sequence

When software writes to the SPIDR register, the data byte is loaded into the 8-bit shift register and then shifted out serially to the MOSI pin most significant bit first.

When data transfer is complete:

- The SPIF bit is set by hardware
- An interrupt request is generated if the SPIE bit is set and the interrupt mask in the CCR register is cleared.

Clearing the SPIF bit is performed by the following software sequence:

1. An access to the SPICSR register while the SPIF bit is set
2. A read to the SPIDR register.

Note: While the SPIF bit is set, all writes to the SPIDR register are inhibited until the SPICSR register is read.

11.3.3.5 Slave Mode Operation

In slave mode, the serial clock is received on the SCK pin from the master device.

To operate the SPI in slave mode:

1. Write to the SPICSR register to perform the following actions:
   - Select the clock polarity and clock phase by configuring the CPOL and CPHA bits (see).
     Note: The slave must have the same CPOL and CPHA settings as the master.
   - Manage the $\overline{SS}$ pin as described in 11.3.3.2 and . If CPHA=1 $\overline{SS}$ must be held low continuously. If CPHA=0 $\overline{SS}$ must be held low during byte transmission and pulled up between each byte to let the slave write in the shift register.
2. Write to the SPICR register to clear the MSTR bit and set the SPE bit to enable the SPI I/O functions.

11.3.3.6 Slave Mode Transmit Sequence

When software writes to the SPIDR register, the data byte is loaded into the 8-bit shift register and then shifted out serially to the MISO pin most significant bit first.

The transmit sequence begins when the slave device receives the clock signal and the most significant bit of the data on its MOSI pin.

When data transfer is complete:

- The SPIF bit is set by hardware
- An interrupt request is generated if SPIE bit is set and interrupt mask in the CCR register is cleared.

Clearing the SPIF bit is performed by the following software sequence:

1. An access to the SPICSR register while the SPIF bit is set.
2. A write or a read to the SPIDR register.

Notes: While the SPIF bit is set, all writes to the SPIDR register are inhibited until the SPICSR register is read.

The SPIF bit can be cleared during a second transmission; however, it must be cleared before the second SPIF bit in order to prevent an Overrun condition (see).

SERIAL PERIPHERAL INTERFACE (Cont'd)

11.3.4 Clock Phase and Clock Polarity

Four possible timing relationships may be chosen by software, using the CPOL and CPHA bits (See).

Note: The idle state of SCK must correspond to the polarity selected in the SPICSR register (by pulling up SCK if CPOL=1 or pulling down SCK if CPOL=0).

The combination of the CPOL clock polarity and CPHA (clock phase) bits selects the data capture clock edge , shows an SPI transfer with the four combinations of the CPHA and CPOL bits. The diagram may be interpreted as a master or slave timing diagram where the SCK pin, the MISO pin, the MOSI pin are directly connected between the master and the slave device.

Note: If CPOL is changed at the communication byte boundaries, the SPI must be disabled by resetting the SPE bit.

Figure 41. Data Clock Timing Diagram

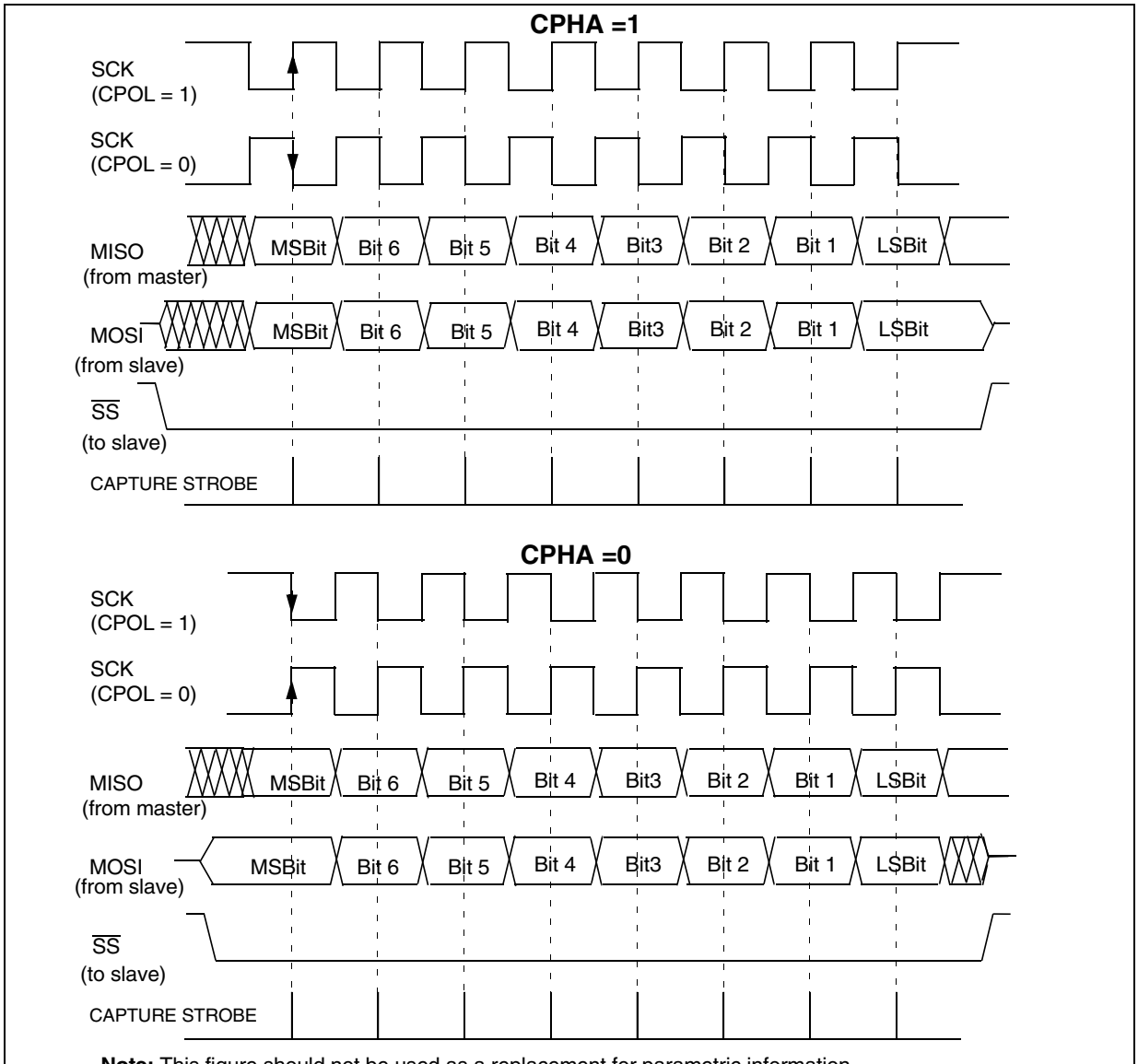

Note: This figure should not be used as a replacement for parametric information. Refer to the Electrical Characteristics chapter.

SERIAL PERIPHERAL INTERFACE (Cont'd)

11.3.5 Error Flags

11.3.5.1 Master Mode Fault (MODF)

Master mode fault occurs when the master device has its $\overline{SS}$ pin pulled low.

When a Master mode fault occurs:

– The MODF bit is set and an SPI interrupt request is generated if the SPIE bit is set.

– The SPE bit is reset. This blocks all output from the device and disables the SPI peripheral.

– The MSTR bit is reset, thus forcing the device into slave mode.

Clearing the MODF bit is done through a software sequence:

1. A read access to the SPICSR register while the MODF bit is set.
2. A write to the SPICR register.

Notes: To avoid any conflicts in an application with multiple slaves, the $\overline{SS}$ pin must be pulled high during the MODF bit clearing sequence. The SPE and MSTR bits may be restored to their original state during or after this clearing sequence.

Hardware does not allow the user to set the SPE and MSTR bits while the MODF bit is set except in the MODF bit clearing sequence.

11.3.5.2 Overrun Condition (OVR)

An overrun condition occurs, when the master device has sent a data byte and the slave device has not cleared the SPIF bit issued from the previously transmitted byte.

When an Overrun occurs:

– The OVR bit is set and an interrupt request is generated if the SPIE bit is set.

In this case, the receiver buffer contains the byte sent after the SPIF bit was last cleared. A read to the SPIDR register returns this byte. All other bytes are lost.

The OVR bit is cleared by reading the SPICSR register.

11.3.5.3 Write Collision Error (WCOL)

A write collision occurs when the software tries to write to the SPIDR register while a data transfer is taking place with an external device. When this happens, the transfer continues uninterrupted; and the software write will be unsuccessful.

Write collisions can occur both in master and slave mode. See also
Management.

Note: a "read collision" will never occur since the received data byte is placed in a buffer in which access is always synchronous with the MCU operation.

The WCOL bit in the SPICSR register is set if a write collision occurs.

No SPI interrupt is generated when the WCOL bit is set (the WCOL bit is a status flag only).

Clearing the WCOL bit is done through a software sequence (see).

Figure 42. Clearing the WCOL bit (Write Collision Flag) Software Sequence

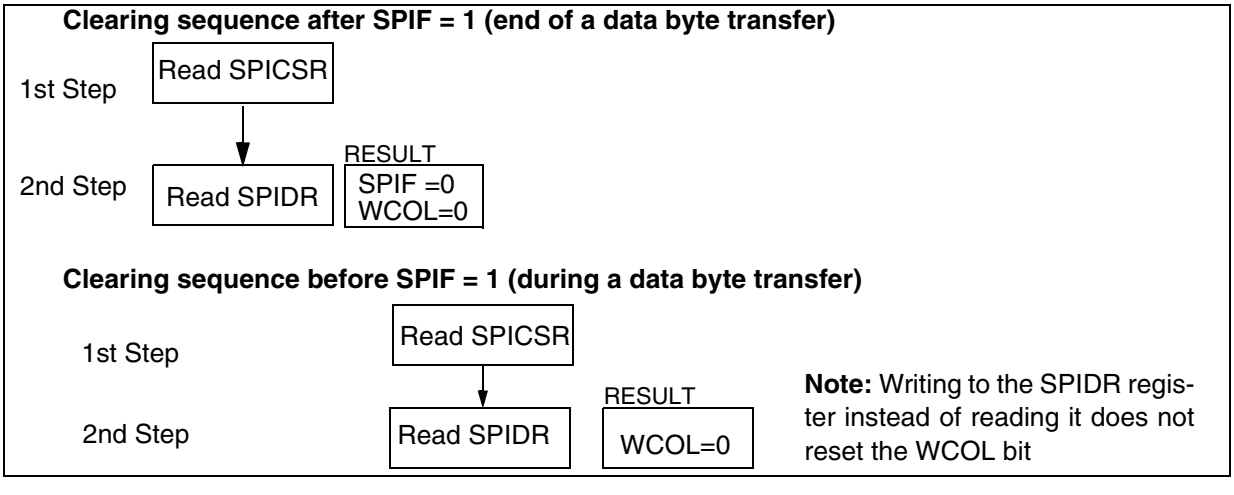

SERIAL PERIPHERAL INTERFACE (Cont'd)

11.3.5.4 Single Master Systems

A typical single master system may be configured, using an MCU as the master and four MCUs as slaves (see).

The master device selects the individual slave devices by using four pins of a parallel port to control the four $\overline{SS}$ pins of the slave devices.

The $\overline{SS}$ pins are pulled high during reset since the master device ports will be forced to be inputs at that time, thus disabling the slave devices.

Note: To prevent a bus conflict on the MISO line the master allows only one active slave device during a transmission.

For more security, the slave device may respond to the master with the received data byte. Then the master will receive the previous byte back from the slave device if all MISO and MOSI pins are connected and the slave has not written to its SPIDR register.

Other transmission security methods can use ports for handshake lines or data bytes with command fields.

Figure 43. Single Master / Multiple Slave Configuration

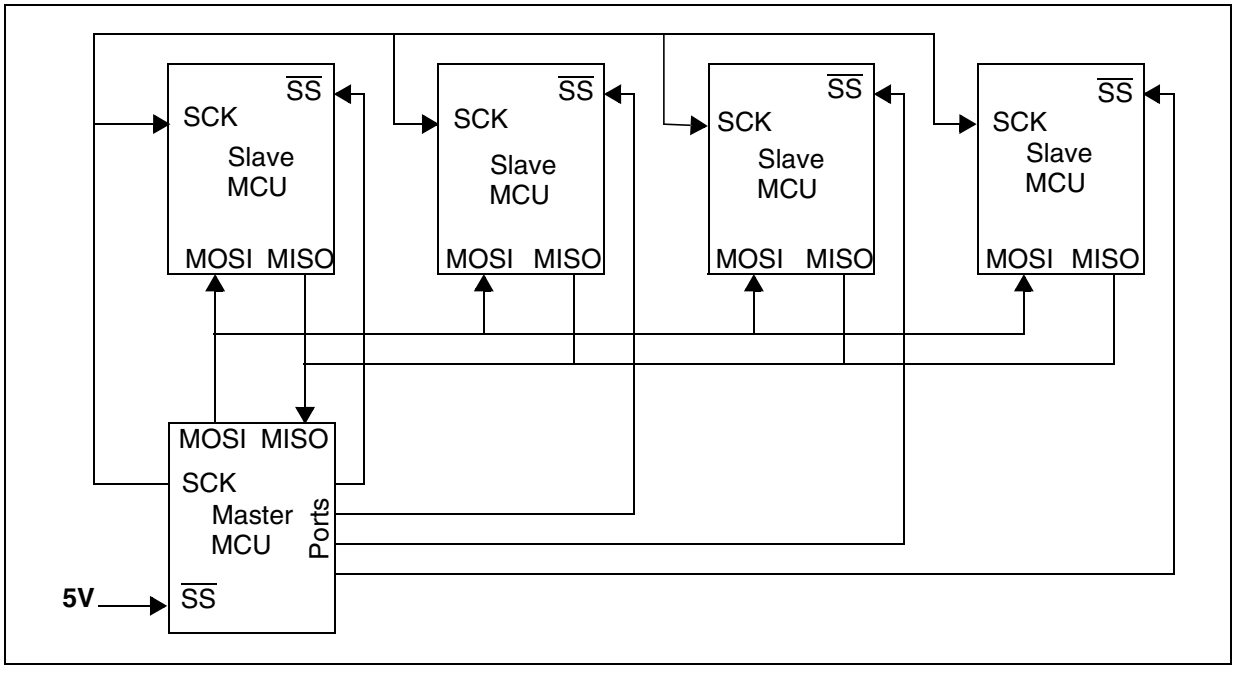

SERIAL PERIPHERAL INTERFACE (Cont'd)

11.3.6 Low Power Modes

Mode	Description
WAIT	No effect on SPI. SPI interrupt events cause the device to exit from WAIT mode.
HALT	SPI registers are frozen. In HALT mode, the SPI is inactive. SPI operation resumes when the MCU is woken up by an interrupt with "exit from HALT mode" capability. The data received is subsequently read from the SPIDR register when the software is running (interrupt vector fetching). If several data are received before the wake-up event, then an overrun error is generated. This error can be detected after the fetch of the interrupt routine that woke up the device.

11.3.6.1 Using the SPI to wakeup the MCU from Halt mode

In slave configuration, the SPI is able to wakeup the ST7 device from HALT mode through a SPIF interrupt. The data received is subsequently read from the SPIDR register when the software is running (interrupt vector fetch). If multiple data transfers have been performed before software clears the SPIF bit, then the OVR bit is set by hardware.

Note: When waking up from Halt mode, if the SPI remains in Slave mode, it is recommended to perform an extra communications cycle to bring the SPI from Halt mode state to normal state. If the SPI exits from Slave mode, it returns to normal state immediately.

Caution: The SPI can wake up the ST7 from Halt mode only if the Slave Select signal (external $\overline{SS}$ pin or the SSI bit in the SPICSR register) is low when the ST7 enters Halt mode. So if Slave selection is configured as external (see 11.3.3.2), make sure the master drives a low level on the $\overline{SS}$ pin when the slave enters Halt mode.

11.3.7 Interrupts

Interrupt Event	Event Flag	Enable Control Bit	Exit from Wait	Exit from Halt
SPI End of Transfer Event	SPIF	SPIE	Yes	Yes
Master Mode Fault Event	MODF		Yes	No
Overrun Error	OVR		Yes	No

Note: The SPI interrupt events are connected to the same interrupt vector (see Interrupts chapter). They generate an interrupt if the corresponding Enable Control Bit is set and the interrupt mask in the CC register is reset (RIM instruction).

SERIAL PERIPHERAL INTERFACE (Cont'd)

11.3.8 Register Description

CONTROL REGISTER (SPICR)

Read/Write

Reset Value: 0000 xxxx (0xh)

7							0
SPIE	SPE	SPR2	MSTR	CPOL	CPHA	SPR1	SPR0

Bit 7 = **SPIE** *Serial Peripheral Interrupt Enable.*
This bit is set and cleared by software.
0: Interrupt is inhibited
1: An SPI interrupt is generated whenever SPIF=1, MODF=1 or OVR=1 in the SPICSR register

Bit 6 = **SPE** *Serial Peripheral Output Enable.*
This bit is set and cleared by software. It is also cleared by hardware when, in master mode, $\overline{SS}$=0 (see
(MODF)). The SPE bit is cleared by reset, so the SPI peripheral is not initially connected to the external pins.
0: I/O pins free for general purpose I/O
1: SPI I/O pin alternate functions enabled

Bit 5 = **SPR2** *Divider Enable*.
This bit is set and cleared by software and is cleared by reset. It is used with the SPR[1:0] bits to set the baud rate. Refer to
mode SCK Frequency.
0: Divider by 2 enabled
1: Divider by 2 disabled

Note: This bit has no effect in slave mode.

Bit 4 = **MSTR** *Master Mode.*
This bit is set and cleared by software. It is also cleared by hardware when, in master mode, $\overline{SS}$=0 (see
(MODF)).
0: Slave mode
1: Master mode. The function of the SCK pin changes from an input to an output and the functions of the MISO and MOSI pins are reversed.

Bit 3 = **CPOL** *Clock Polarity.*
This bit is set and cleared by software. This bit determines the idle state of the serial Clock. The CPOL bit affects both the master and slave modes.
0: SCK pin has a low level idle state
1: SCK pin has a high level idle state

Note: If CPOL is changed at the communication byte boundaries, the SPI must be disabled by resetting the SPE bit.

Bit 2 = **CPHA** *Clock Phase.*
This bit is set and cleared by software.
0: The first clock transition is the first data capture edge.
1: The second clock transition is the first capture edge.

Note: The slave must have the same CPOL and CPHA settings as the master.

Bits 1:0 = **SPR[1:0]** *Serial Clock Frequency.*
These bits are set and cleared by software. Used with the SPR2 bit, they select the baud rate of the SPI serial clock SCK output by the SPI in master mode.

Note: These 2 bits have no effect in slave mode.

Table 15. SPI Master mode SCK Frequency

Serial Clock	SPR2	SPR1	SPR0
$f_{CPU}/4$	1	0	0
$f_{CPU}/8$	0	0	0
$f_{CPU}/16$	0	0	1
$f_{CPU}/32$	1	1	0
$f_{CPU}/64$	0	1	0
$f_{CPU}/128$	0	1	1

SERIAL PERIPHERAL INTERFACE (Cont'd)

CONTROL/STATUS REGISTER (SPICSR)
Read/Write (some bits Read Only)
Reset Value: 0000 0000 (00h)

7							0
SPIF	WCOL	OVR	MODF	-	SOD	SSM	SSI

Bit 7 = **SPIF** *Serial Peripheral Data Transfer Flag (Read only).*
This bit is set by hardware when a transfer has been completed. An interrupt is generated if SPIE=1 in the SPICR register. It is cleared by a software sequence (an access to the SPICSR register followed by a write or a read to the SPIDR register).
0: Data transfer is in progress or the flag has been cleared.
1: Data transfer between the device and an external device has been completed.

Note: While the SPIF bit is set, all writes to the SPIDR register are inhibited until the SPICSR register is read.

Bit 6 = **WCOL** *Write Collision status (Read only).*
This bit is set by hardware when a write to the SPIDR register is done during a transmit sequence. It is cleared by a software sequence (see).
0: No write collision occurred
1: A write collision has been detected

Bit 5 = **OVR** *SPI Overrun error (Read only).*
This bit is set by hardware when the byte currently being received in the shift register is ready to be transferred into the SPIDR register while SPIF = 1 (See). An interrupt is generated if SPIE = 1 in the SPICR register. The OVR bit is cleared by software reading the SPICSR register.
0: No overrun error
1: Overrun error detected

Bit 4 = **MODF** *Mode Fault flag (Read only).*
This bit is set by hardware when the $\overline{SS}$ pin is pulled low in master mode (see Master Mode Fault (MODF)). An SPI interrupt can be generated if SPIE=1 in the SPICR register. This bit is cleared by a software sequence (An access to the SPICSR register while MODF=1 followed by a write to the SPICR register).
0: No master mode fault detected
1: A fault in master mode has been detected

Bit 3 = Reserved, must be kept cleared.

Bit 2 = **SOD** *SPI Output Disable.*
This bit is set and cleared by software. When set, it disables the alternate function of the SPI output (MOSI in master mode / MISO in slave mode)
0: SPI output enabled (if SPE=1)
1: SPI output disabled

Bit 1 = **SSM** *$\overline{SS}$ Management.*
This bit is set and cleared by software. When set, it disables the alternate function of the SPI $\overline{SS}$ pin and uses the SSI bit value instead. See 11.3.3.2 Slave Select Management.
0: Hardware management ($\overline{SS}$ managed by external pin)
1: Software management (internal $\overline{SS}$ signal controlled by SSI bit. External $\overline{SS}$ pin free for general-purpose I/O)

Bit 0 = **SSI** *$\overline{SS}$ Internal Mode.*
This bit is set and cleared by software. It acts as a 'chip select' by controlling the level of the $\overline{SS}$ slave select signal when the SSM bit is set.
0 : Slave selected
1 : Slave deselected

DATA I/O REGISTER (SPIDR)
Read/Write
Reset Value: Undefined

7							0
D7	D6	D5	D4	D3	D2	D1	D0

The SPIDR register is used to transmit and receive data on the serial bus. In a master device, a write to this register will initiate transmission/reception of another byte.

Notes: During the last clock cycle the SPIF bit is set, a copy of the received data byte in the shift register is moved to a buffer. When the user reads the serial peripheral data I/O register, the buffer is actually being read.

While the SPIF bit is set, all writes to the SPIDR register are inhibited until the SPICSR register is read.

Warning: A write to the SPIDR register places data directly into the shift register for transmission.

A read to the SPIDR register returns the value located in the buffer and not the content of the shift register (see).

SERIAL PERIPHERAL INTERFACE (Cont'd)

Table 16. SPI Register Map and Reset Values

Address (Hex.)	Register Label	7	6	5	4	3	2	1	0
31	**SPIDR** Reset Value	MSB x	x	x	x	x	x	x	LSB x
32	**SPICR** Reset Value	SPIE 0	SPE 0	SPR2 0	MSTR 0	CPOL x	CPHA x	SPR1 x	SPR0 x
33	**SPICSR** Reset Value	SPIF 0	WCOL 0	OVR 0	MODF 0	0	SOD 0	SSM 0	SSI 0

11.4 8-BIT A/D CONVERTER (ADC)

11.4.1 Introduction

The on-chip Analog to Digital Converter (ADC) peripheral is a 8-bit, successive approximation converter with internal sample and hold circuitry. This peripheral has up to 5 multiplexed analog input channels (refer to device pin out description) that allow the peripheral to convert the analog voltage levels from up to 5 different sources.

The result of the conversion is stored in a 8-bit Data Register. The A/D converter is controlled through a Control/Status Register.

11.4.2 Main Features

- 8-bit conversion
- Up to 5 channels with multiplexed input
- Linear successive approximation
- Dual input range
  - 0 to V_{DD} or
  - 0V to 250mV
- Data register (DR) which contains the results
- Conversion complete status flag
- On/off bit (to reduce consumption)
- Fixed gain operational amplifier (x8) (not available on ST7LITES5 devices)

11.4.3 Functional Description

11.4.3.1 Analog Power Supply

The block diagram is shown in .

V_{DD} and V_{SS} are the high and low level reference voltage pins.

Conversion accuracy may therefore be impacted by voltage drops and noise in the event of heavily loaded or badly decoupled power supply lines.

For more details, refer to the Electrical characteristics section.

11.4.3.2 Input Voltage Amplifier

The input voltage can be amplified by a factor of 8 by enabling the AMPSEL bit in the ADAMP register.

When the amplifier is enabled, the input range is 0V to 250 mV.

For example, if V_{DD} = 5V, then the ADC can convert voltages in the range 0V to 250mV with an ideal resolution of 2.4mV (equivalent to 11-bit resolution with reference to a V_{SS} to V_{DD} range).

For more details, refer to the Electrical characteristics section.

Note: The amplifier is switched on by the ADON bit in the ADCCSR register, so no additional start-up time is required when the amplifier is selected by the AMPSEL bit.

Figure 44. ADC Block Diagram

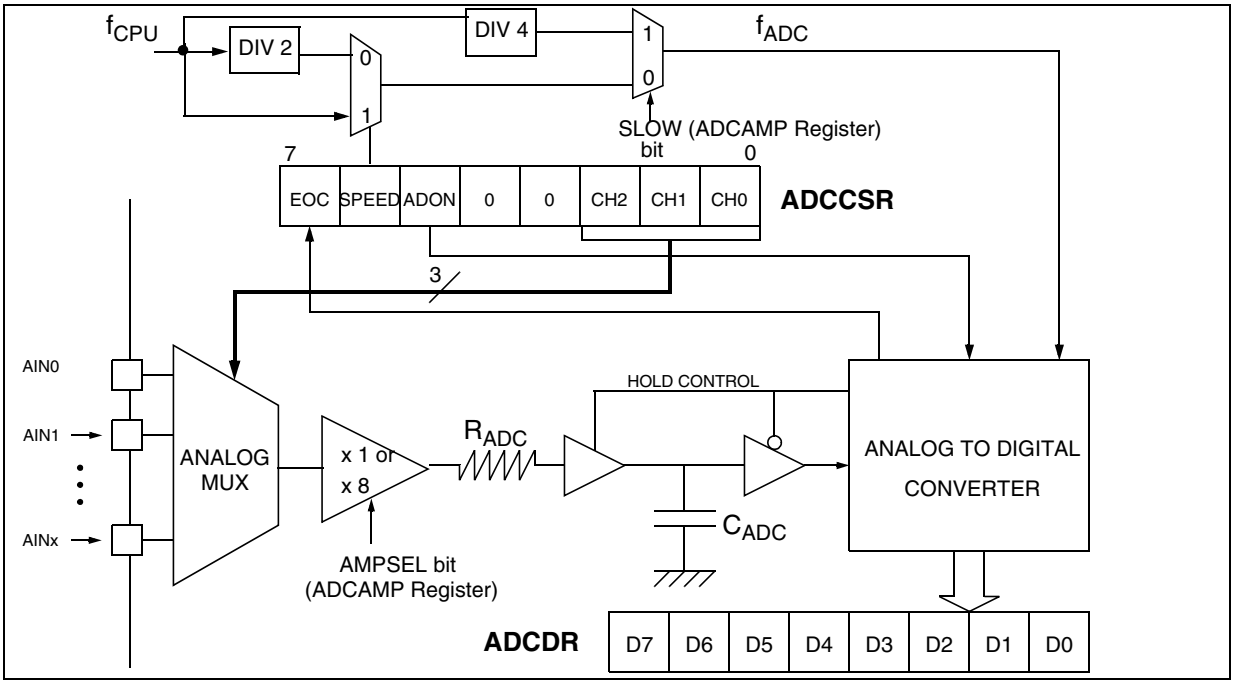

8-BIT A/D CONVERTER (ADC) (Cont'd)

11.4.3.3 Digital A/D Conversion Result

The conversion is monotonic, meaning that the result never decreases if the analog input does not and never increases if the analog input does not.

If the input voltage (V_{AIN}) is greater than or equal to V_{DDA} (high-level voltage reference) then the conversion result in the DR register is FFh (full scale) without overflow indication.

If input voltage (V_{AIN}) is lower than or equal to V_{SSA} (low-level voltage reference) then the conversion result in the DR register is 00h.

The A/D converter is linear and the digital result of the conversion is stored in the ADCDR register. The accuracy of the conversion is described in the parametric section.

R_{AIN} is the maximum recommended impedance for an analog input signal. If the impedance is too high, this will result in a loss of accuracy due to leakage and sampling not being completed in the alloted time.

11.4.3.4 A/D Conversion Phases

The A/D conversion is based on two conversion phases as shown in :

- Sample capacitor loading [duration: t_{SAMPLE}]
  During this phase, the V_{AIN} input voltage to be measured is loaded into the C_{ADC} sample capacitor.
- A/D conversion [duration: t_{HOLD}]
  During this phase, the A/D conversion is computed (8 successive approximations cycles) and the C_{ADC} sample capacitor is disconnected from the analog input pin to get the optimum analog to digital conversion accuracy.
- The total conversion time:
  $t_{CONV} = t_{SAMPLE} + t_{HOLD}$

While the ADC is on, these two phases are continuously repeated.

At the end of each conversion, the sample capacitor is kept loaded with the previous measurement load. The advantage of this behaviour is that it minimizes the current consumption on the analog pin in case of single input channel measurement.

11.4.3.5 Software Procedure

Refer to the control/status register (CSR) and data register (DR) in for the bit definitions and to for the timings.

ADC Configuration

The analog input ports must be configured as input, no pull-up, no interrupt. Refer to the «I/O ports» chapter. Using these pins as analog inputs does not affect the ability of the port to be read as a logic input.

In the CSR register:

– Select the CH[2:0] bits to assign the analog channel to be converted.

ADC Conversion

In the CSR register:

– Set the ADON bit to enable the A/D converter and to start the first conversion. From this time on, the ADC performs a continuous conversion of the selected channel.

When a conversion is complete

– The EOC bit is set by hardware.
– No interrupt is generated.
– The result is in the DR register and remains valid until the next conversion has ended.

A write to the ADCCSR register (with ADON set) aborts the current conversion, resets the EOC bit and starts a new conversion.

Figure 45. ADC Conversion Timings

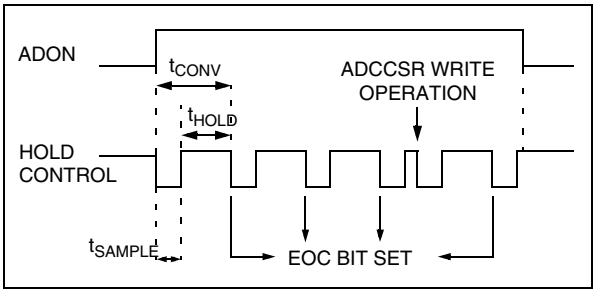

11.4.4 Low Power Modes

Mode	Description
WAIT	No effect on A/D Converter
HALT	A/D Converter disabled. After wakeup from Halt mode, the A/D Converter requires a stabilization time before accurate conversions can be performed.

Note: The A/D converter may be disabled by resetting the ADON bit. This feature allows reduced power consumption when no conversion is needed and between single shot conversions.

11.4.5 Interrupts

None

8-BIT A/D CONVERTER (ADC) (Cont'd)

11.4.6 Register Description

CONTROL/STATUS REGISTER (ADCCSR)

Read/Write

Reset Value: 0000 0000 (00h)

7							0
EOC	SPEED	ADON	0	0	CH2	CH1	CH0

Bit 7 = **EOC** *Conversion Complete*
This bit is set by hardware. It is cleared by software reading the result in the DR register or writing to the CSR register.
0: Conversion is not complete
1: Conversion can be read from the DR register

Bit 6 = **SPEED** *ADC clock selection*
This bit is set and cleared by software. It is used together with the SLOW bit to configure the ADC clock speed. Refer to the table in the SLOW bit description.

Bit 5 = **ADON** *A/D Converter and Amplifier On*
This bit is set and cleared by software.
0: A/D converter and amplifier are switched off
1: A/D converter and amplifier are switched on

Note: Amplifier not available on ST7LITES5 devices

Bits 4:3 = **Reserved.** *must always be cleared.*

Bits 2:0 = **CH[2:0]** *Channel Selection*
These bits are set and cleared by software. They select the analog input to convert.

Channel Pin[1]	CH2	CH1	CH0
AIN0	0	0	0
AIN1	0	0	1
AIN2	0	1	0
AIN3	0	1	1
AIN4	1	0	0

Notes:

1. The number of pins AND the channel selection varies according to the device. Refer to the device pinout.

2. A write to the ADCCSR register (with ADON set) aborts the current conversion, resets the EOC bit and starts a new conversion.

DATA REGISTER (ADCDR)

Read Only

Reset Value: 0000 0000 (00h)

7							0
D7	D6	D5	D4	D3	D2	D1	D0

Bits 7:0 = **D[7:0]** *Analog Converted Value*
This register contains the converted analog value in the range 00h to FFh.

Note: Reading this register reset the EOC flag.

AMPLIFIER CONTROL REGISTER (ADCAMP)

Read/Write

Reset Value: 0000 0000 (00h)

7							0
0	0	0	0	SLOW	AMP-SEL	0	0

Bit 7:4 = Reserved. Forced by hardware to 0.

Bit 3 = **SLOW** *Slow mode*
This bit is set and cleared by software. It is used together with the SPEED bit to configure the ADC clock speed as shown on the table below.

f_{ADC}	SLOW	SPEED
$f_{CPU}/2$	0	0
f_{CPU}	0	1
$f_{CPU}/4$	1	x

Bit 2 = **AMPSEL** *Amplifier Selection Bit*
This bit is set and cleared by software. For ST7LITES5 devices, this bit must be kept at its reset value (0).
0: Amplifier is not selected
1: Amplifier is selected

Note: When AMPSEL=1 it is mandatory that f_{ADC} be less than or equal to 2 MHz.

Bits 1:0 = Reserved. Forced by hardware to 0.

Note: If ADC settings are changed by writing the ADCAMP register while the ADC is running, a dummy conversion is needed before obtaining results with the new settings.

Table 17. ADC Register Map and Reset Values

Address (Hex.)	Register Label	7	6	5	4	3	2	1	0
34h	**ADCCSR** Reset Value	EOC 0	SPEED 0	ADON 0	0	0	CH2 0	CH1 0	CH0 0
35h	**ADCDR** Reset Value	D7 0	D6 0	D5 0	D4 0	D3 0	D2 0	D1 0	D0 0
36h	**ADCAMP** Reset Value	0	0	0	0	SLOW 0	AMPSEL 0	0	0

12 INSTRUCTION SET

12.1 ST7 ADDRESSING MODES

The ST7 Core features 17 different addressing modes which can be classified in seven main groups:

Addressing Mode	Example
Inherent	nop
Immediate	ld A,#$55
Direct	ld A,$55
Indexed	ld A,($55,X)
Indirect	ld A,([$55],X)
Relative	jrne loop
Bit operation	bset byte,#5

The ST7 Instruction set is designed to minimize the number of bytes required per instruction: To do so, most of the addressing modes may be subdivided in two submodes called long and short:

– Long addressing mode is more powerful because it can use the full 64 Kbyte address space, however it uses more bytes and more CPU cycles.

– Short addressing mode is less powerful because it can generally only access page zero (0000h - 00FFh range), but the instruction size is more compact, and faster. All memory to memory instructions use short addressing modes only (CLR, CPL, NEG, BSET, BRES, BTJT, BTJF, INC, DEC, RLC, RRC, SLL, SRL, SRA, SWAP)

The ST7 Assembler optimizes the use of long and short addressing modes.

Table 18. ST7 Addressing Mode Overview

Mode			Syntax	Destination/ Source	Pointer Address (Hex.)	Pointer Size (Hex.)	Length (Bytes)
Inherent			nop				+ 0
Immediate			ld A,#$55				+ 1
Short	Direct		ld A,$10	00..FF			+ 1
Long	Direct		ld A,$1000	0000..FFFF			+ 2
No Offset	Direct	Indexed	ld A,(X)	00..FF			+ 0 (with X register) + 1 (with Y register)
Short	Direct	Indexed	ld A,($10,X)	00..1FE			+ 1
Long	Direct	Indexed	ld A,($1000,X)	0000..FFFF			+ 2
Short	Indirect		ld A,[$10]	00..FF	00..FF	byte	+ 2
Long	Indirect		ld A,[$10.w]	0000..FFFF	00..FF	word	+ 2
Short	Indirect	Indexed	ld A,([$10],X)	00..1FE	00..FF	byte	+ 2
Long	Indirect	Indexed	ld A,([$10.w],X)	0000..FFFF	00..FF	word	+ 2
Relative	Direct		jrne loop	PC-128/PC+127[1)]			+ 1
Relative	Indirect		jrne [$10]	PC-128/PC+127[1)]	00..FF	byte	+ 2
Bit	Direct		bset $10,#7	00..FF			+ 1
Bit	Indirect		bset [$10],#7	00..FF	00..FF	byte	+ 2
Bit	Direct	Relative	btjt $10,#7,skip	00..FF			+ 2
Bit	Indirect	Relative	btjt [$10],#7,skip	00..FF	00..FF	byte	+ 3

Note:
1. At the time the instruction is executed, the Program Counter (PC) points to the instruction following JRxx.

ST7 ADDRESSING MODES (cont'd)

12.1.1 Inherent

All Inherent instructions consist of a single byte. The opcode fully specifies all the required information for the CPU to process the operation.

Inherent Instruction	Function
NOP	No operation
TRAP	S/W Interrupt
WFI	Wait For Interrupt (Low Power Mode)
HALT	Halt Oscillator (Lowest Power Mode)
RET	Subroutine Return
IRET	Interrupt Subroutine Return
SIM	Set Interrupt Mask
RIM	Reset Interrupt Mask
SCF	Set Carry Flag
RCF	Reset Carry Flag
RSP	Reset Stack Pointer
LD	Load
CLR	Clear
PUSH/POP	Push/Pop to/from the stack
INC/DEC	Increment/Decrement
TNZ	Test Negative or Zero
CPL, NEG	1 or 2 Complement
MUL	Byte Multiplication
SLL, SRL, SRA, RLC, RRC	Shift and Rotate Operations
SWAP	Swap Nibbles

12.1.2 Immediate

Immediate instructions have 2 bytes, the first byte contains the opcode, the second byte contains the operand value.

Immediate Instruction	Function
LD	Load
CP	Compare
BCP	Bit Compare
AND, OR, XOR	Logical Operations
ADC, ADD, SUB, SBC	Arithmetic Operations

12.1.3 Direct

In Direct instructions, the operands are referenced by their memory address.

The direct addressing mode consists of two submodes:

Direct (Short)

The address is a byte, thus requires only 1 byte after the opcode, but only allows 00 - FF addressing space.

Direct (Long)

The address is a word, thus allowing 64 Kbyte addressing space, but requires 2 bytes after the opcode.

12.1.4 Indexed (No Offset, Short, Long)

In this mode, the operand is referenced by its memory address, which is defined by the unsigned addition of an index register (X or Y) with an offset.

The indirect addressing mode consists of three submodes:

Indexed (No Offset)

There is no offset (no extra byte after the opcode), and allows 00 - FF addressing space.

Indexed (Short)

The offset is a byte, thus requires only 1 byte after the opcode and allows 00 - 1FE addressing space.

Indexed (Long)

The offset is a word, thus allowing 64 Kbyte addressing space and requires 2 bytes after the opcode.

12.1.5 Indirect (Short, Long)

The required data byte to do the operation is found by its memory address, located in memory (pointer).

The pointer address follows the opcode. The indirect addressing mode consists of two submodes:

Indirect (Short)

The pointer address is a byte, the pointer size is a byte, thus allowing 00 - FF addressing space, and requires 1 byte after the opcode.

Indirect (Long)

The pointer address is a byte, the pointer size is a word, thus allowing 64 Kbyte addressing space, and requires 1 byte after the opcode.

ST7 ADDRESSING MODES (cont'd)

12.1.6 Indirect Indexed (Short, Long)

This is a combination of indirect and short indexed addressing modes. The operand is referenced by its memory address, which is defined by the unsigned addition of an index register value (X or Y) with a pointer value located in memory. The pointer address follows the opcode.

The indirect indexed addressing mode consists of two submodes:

Indirect Indexed (Short)

The pointer address is a byte, the pointer size is a byte, thus allowing 00 - 1FE addressing space, and requires 1 byte after the opcode.

Indirect Indexed (Long)

The pointer address is a byte, the pointer size is a word, thus allowing 64 Kbyte addressing space, and requires 1 byte after the opcode.

Table 19. Instructions Supporting Direct, Indexed, Indirect and Indirect Indexed Addressing Modes

Long and Short Instructions	Function
LD	Load
CP	Compare
AND, OR, XOR	Logical Operations
ADC, ADD, SUB, SBC	Arithmetic Addition/subtraction operations
BCP	Bit Compare

Short Instructions Only	Function
CLR	Clear
INC, DEC	Increment/Decrement
TNZ	Test Negative or Zero
CPL, NEG	1 or 2 Complement
BSET, BRES	Bit Operations
BTJT, BTJF	Bit Test and Jump Operations
SLL, SRL, SRA, RLC, RRC	Shift and Rotate Operations
SWAP	Swap Nibbles
CALL, JP	Call or Jump subroutine

12.1.7 Relative Mode (Direct, Indirect)

This addressing mode is used to modify the PC register value by adding an 8-bit signed offset to it.

Available Relative Direct/ Indirect Instructions	Function
JRxx	Conditional Jump
CALLR	Call Relative

The relative addressing mode consists of two submodes:

Relative (Direct)

The offset follows the opcode.

Relative (Indirect)

The offset is defined in memory, of which the address follows the opcode.

12.2 INSTRUCTION GROUPS

The ST7 family devices use an Instruction Set consisting of 63 instructions. The instructions may be subdivided into 13 main groups as illustrated in the following table:

Load and Transfer	LD	CLR						
Stack operation	PUSH	POP	RSP					
Increment/Decrement	INC	DEC						
Compare and Tests	CP	TNZ	BCP					
Logical operations	AND	OR	XOR	CPL	NEG			
Bit Operation	BSET	BRES						
Conditional Bit Test and Branch	BTJT	BTJF						
Arithmetic operations	ADC	ADD	SUB	SBC	MUL			
Shift and Rotates	SLL	SRL	SRA	RLC	RRC	SWAP	SLA	
Unconditional Jump or Call	JRA	JRT	JRF	JP	CALL	CALLR	NOP	RET
Conditional Branch	JRxx							
Interruption management	TRAP	WFI	HALT	IRET				
Condition Code Flag modification	SIM	RIM	SCF	RCF				

Using a prebyte

The instructions are described with 1 to 4 bytes.

In order to extend the number of available opcodes for an 8-bit CPU (256 opcodes), three different prebyte opcodes are defined. These prebytes modify the meaning of the instruction they precede.

The whole instruction becomes:

- PC-2 End of previous instruction
- PC-1 Prebyte
- PC Opcode
- PC+1 Additional word (0 to 2) according to the number of bytes required to compute the effective address

These prebytes enable instruction in Y as well as indirect addressing modes to be implemented. They precede the opcode of the instruction in X or the instruction using direct addressing mode. The prebytes are:

- PDY 90 Replace an X based instruction using immediate, direct, indexed, or inherent addressing mode by a Y one.
- PIX 92 Replace an instruction using direct, direct bit or direct relative addressing mode to an instruction using the corresponding indirect addressing mode.
  It also changes an instruction using X indexed addressing mode to an instruction using indirect X indexed addressing mode.
- PIY 91 Replace an instruction using X indirect indexed addressing mode by a Y one.

12.2.1 Illegal Opcode Reset

In order to provide enhanced robustness to the device against unexpected behavior, a system of illegal opcode detection is implemented. If a code to be executed does not correspond to any opcode or prebyte value, a reset is generated. This, combined with the Watchdog, allows the detection and recovery from an unexpected fault or interference.

Note: A valid prebyte associated with a valid opcode forming an unauthorized combination does not generate a reset.

INSTRUCTION GROUPS (cont'd)

Mnemo	Description	Function/Example	Dst	Src	H	I	N	Z	C
ADC	Add with Carry	A = A + M + C	A	M	H		N	Z	C
ADD	Addition	A = A + M	A	M	H		N	Z	C
AND	Logical And	A = A . M	A	M			N	Z	
BCP	Bit compare A, Memory	tst (A . M)	A	M			N	Z	
BRES	Bit Reset	bres Byte, #3	M						
BSET	Bit Set	bset Byte, #3	M						
BTJF	Jump if bit is false (0)	btjf Byte, #3, Jmp1	M						C
BTJT	Jump if bit is true (1)	btjt Byte, #3, Jmp1	M						C
CALL	Call subroutine								
CALLR	Call subroutine relative								
CLR	Clear		reg, M				0	1	
CP	Arithmetic Compare	tst(Reg - M)	reg	M			N	Z	C
CPL	One Complement	A = FFH-A	reg, M				N	Z	1
DEC	Decrement	dec Y	reg, M				N	Z	
HALT	Halt					0			
IRET	Interrupt routine return	Pop CC, A, X, PC			H	I	N	Z	C
INC	Increment	inc X	reg, M				N	Z	
JP	Absolute Jump	jp [TBL.w]							
JRA	Jump relative always								
JRT	Jump relative								
JRF	Never jump	jrf *							
JRIH	Jump if ext. interrupt = 1								
JRIL	Jump if ext. interrupt = 0								
JRH	Jump if H = 1	H = 1 ?							
JRNH	Jump if H = 0	H = 0 ?							
JRM	Jump if I = 1	I = 1 ?							
JRNM	Jump if I = 0	I = 0 ?							
JRMI	Jump if N = 1 (minus)	N = 1 ?							
JRPL	Jump if N = 0 (plus)	N = 0 ?							
JREQ	Jump if Z = 1 (equal)	Z = 1 ?							
JRNE	Jump if Z = 0 (not equal)	Z = 0 ?							
JRC	Jump if C = 1	C = 1 ?							
JRNC	Jump if C = 0	C = 0 ?							
JRULT	Jump if C = 1	Unsigned <							
JRUGE	Jump if C = 0	Jmp if unsigned >=							
JRUGT	Jump if (C + Z = 0)	Unsigned >							

INSTRUCTION GROUPS (cont'd)

Mnemo	Description	Function/Example	Dst	Src	H	I	N	Z	C
JRULE	Jump if (C + Z = 1)	Unsigned <=							
LD	Load	dst <= src	reg, M	M, reg			N	Z	
MUL	Multiply	X,A = X * A	A, X, Y	X, Y, A	0				0
NEG	Negate (2's compl)	neg $10	reg, M				N	Z	C
NOP	No Operation								
OR	OR operation	A = A + M	A	M			N	Z	
POP	Pop from the Stack	pop reg	reg	M					
		pop CC	CC	M	H	I	N	Z	C
PUSH	Push onto the Stack	push Y	M	reg, CC					
RCF	Reset carry flag	C = 0							0
RET	Subroutine Return								
RIM	Enable Interrupts	I = 0				0			
RLC	Rotate left true C	C <= Dst <= C	reg, M				N	Z	C
RRC	Rotate right true C	C => Dst => C	reg, M				N	Z	C
RSP	Reset Stack Pointer	S = Max allowed							
SBC	Subtract with Carry	A = A - M - C	A	M			N	Z	C
SCF	Set carry flag	C = 1							1
SIM	Disable Interrupts	I = 1				1			
SLA	Shift left Arithmetic	C <= Dst <= 0	reg, M				N	Z	C
SLL	Shift left Logic	C <= Dst <= 0	reg, M				N	Z	C
SRL	Shift right Logic	0 => Dst => C	reg, M				0	Z	C
SRA	Shift right Arithmetic	Dst7 => Dst => C	reg, M				N	Z	C
SUB	Subtraction	A = A - M	A	M			N	Z	C
SWAP	SWAP nibbles	Dst[7..4] <=> Dst[3..0]	reg, M				N	Z	
TNZ	Test for Neg & Zero	tnz lbl1					N	Z	
TRAP	S/W trap	S/W interrupt				1			
WFI	Wait for Interrupt					0			
XOR	Exclusive OR	A = A XOR M	A	M			N	Z	

13 ELECTRICAL CHARACTERISTICS

13.1 PARAMETER CONDITIONS

Unless otherwise specified, all voltages are referred to V_{SS}.

13.1.1 Minimum and Maximum values

Unless otherwise specified the minimum and maximum values are guaranteed in the worst conditions of ambient temperature, supply voltage and frequencies by tests in production on 100% of the devices with an ambient temperature at T_A=25°C and T_A=$T_A$max (given by the selected temperature range).

Data based on characterization results, design simulation and/or technology characteristics are indicated in the table footnotes and are not tested in production. Based on characterization, the minimum and maximum values refer to sample tests and represent the mean value plus or minus three times the standard deviation (mean±3Σ).

13.1.2 Typical values

Unless otherwise specified, typical data are based on T_A=25°C, V_{DD}=5V (for the 4.5V≤V_{DD}≤5.5V voltage range), V_{DD}=3.3V (for the 3V≤V_{DD}≤3.6V voltage range) and V_{DD}=2.7V (for the 2.4V≤V_{DD}≤3V voltage range). They are given only as design guidelines and are not tested.

13.1.3 Typical curves

Unless otherwise specified, all typical curves are given only as design guidelines and are not tested.

13.1.4 Loading capacitor

The loading conditions used for pin parameter measurement are shown in .

Figure 46. Pin loading conditions

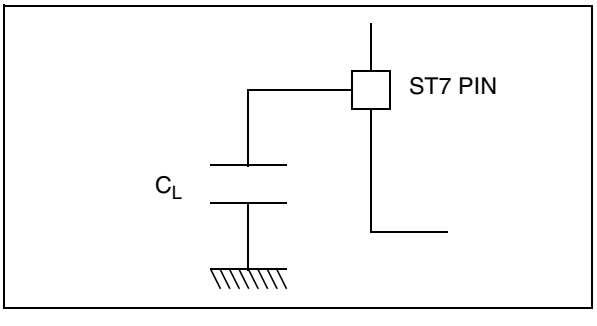

13.1.5 Pin input voltage

The input voltage measurement on a pin of the device is described in .

Figure 47. Pin input voltage

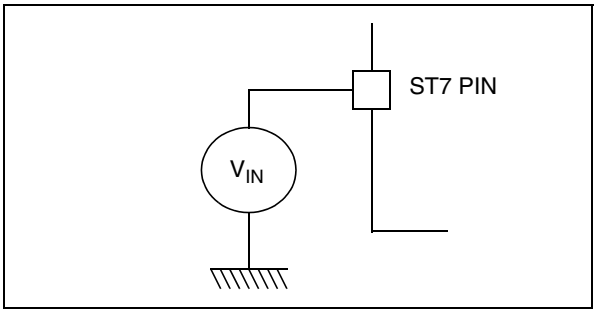

13.2 ABSOLUTE MAXIMUM RATINGS

Stresses above those listed as “absolute maximum ratings” may cause permanent damage to the device. This is a stress rating only and functional operation of the device under these conditions is not implied. Exposure to maximum rating conditions for extended periods may affect device reliability.

13.2.1 Voltage Characteristics

Symbol	Ratings	Maximum value	Unit
V_{DD} - V_{SS}	Supply voltage	7.0	V
V_{IN}	Input voltage on any pin 1) & 2)	V_{SS}-0.3 to V_{DD}+0.3	
$V_{ESD(HBM)}$	Electrostatic discharge voltage (Human Body Model)	see	

13.2.2 Current Characteristics

Symbol	Ratings	Maximum value	Unit
I_{VDD}	Total current into V_{DD} power lines (source) 3)	75	mA
I_{VSS}	Total current out of V_{SS} ground lines (sink) 3)	150	
I_{IO}	Output current sunk by any standard I/O and control pin	20	
	Output current sunk by any high sink I/O pin	40	
	Output current source by any I/Os and control pin	- 25	
$I_{INJ(PIN)}$ 2) & 4)	Injected current on $\overline{RESET}$ pin	± 5	
	Injected current on PB1 pin 5)	+5	
	Injected current on any other pin 6)	± 5	
$\Sigma I_{INJ(PIN)}$ 2)	Total injected current (sum of all I/O and control pins) 6)	± 20	

13.2.3 Thermal Characteristics

Symbol	Ratings	Value	Unit
T_{STG}	Storage temperature range	-65 to +150	°C
T_J	Maximum junction temperature (see)		

Notes:

1. Directly connecting the I/O pins to V_{DD} or V_{SS} could damage the device if an unexpected change of the I/O configuration occurs (for example, due to a corrupted program counter). To guarantee safe operation, this connection has to be done through a pull-up or pull-down resistor (typical: 10kΩ for I/Os). Unused I/O pins must be tied in the same way to V_{DD} or V_{SS} according to their reset configuration. For reset pin, please refer to Figure 80.

2. $I_{INJ(PIN)}$ must never be exceeded. This is implicitly insured if V_{IN} maximum is respected. If V_{IN} maximum cannot be respected, the injection current must be limited externally to the $I_{INJ(PIN)}$ value. A positive injection is induced by $V_{IN}>V_{DD}$ while a negative injection is induced by $V_{IN}<V_{SS}$.

3. All power (V_{DD}) and ground (V_{SS}) lines must always be connected to the external supply.

4. Negative injection disturbs the analog performance of the device. In particular, it induces leakage currents throughout the device including the analog inputs. To avoid undesirable effects on the analog functions, care must be taken:

- Analog input pins must have a negative injection less than 0.8 mA (assuming that the impedance of the analog voltage is lower than the specified limits)
- Pure digital pins must have a negative injection less than 1.6mA. In addition, it is recommended to inject the current as far as possible from the analog input pins.

5. No negative current injection allowed on PB1 pin.

6. When several inputs are submitted to a current injection, the maximum $\Sigma I_{INJ(PIN)}$ is the absolute sum of the positive and negative injected currents (instantaneous values). These results are based on characterisation with $\Sigma I_{INJ(PIN)}$ maximum current injection on four I/O port pins of the device.

13.3 OPERATING CONDITIONS

13.3.1 General Operating Conditions: Suffix 6 Devices

T_A = -40 to +85°C unless otherwise specified.

Symbol	Parameter	Conditions	Min	Max	Unit
V_{DD}	Supply voltage	f_{OSC} = 8 MHz. max.,	2.4	5.5	V
		f_{OSC} = 16 MHz. max.	3.3	5.5	
f_{CLKIN}	External clock frequency on CLKIN pin	$3.3V \leq V_{DD} \leq 5.5V$	up to 16		MHz
		$2.4V \leq V_{DD} < 3.3V$	up to 8		

Figure 48. f_{CLKIN} Maximum Operating Frequency Versus V_{DD} Supply Voltage

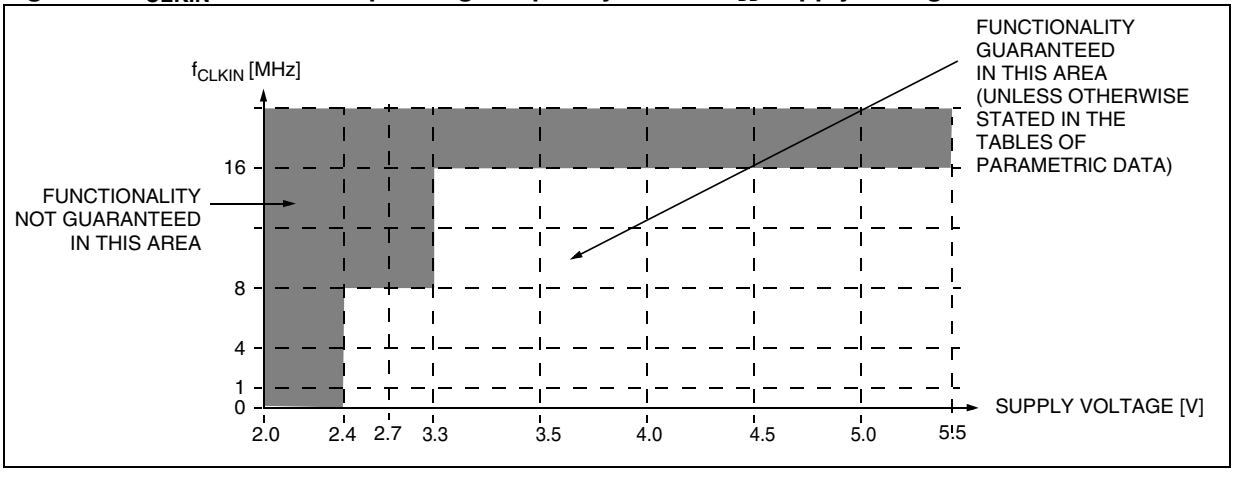

Note: For further information on clock management and f_{CLKIN} description, refer to in on page 24

13.3.2 Operating Conditions with Low Voltage Detector (LVD)

T_A = -40 to 85°C, unless otherwise specified

Symbol	Parameter	Conditions	Min	Typ	Max	Unit
$V_{IT+(LVD)}$	Reset release threshold (V_{DD} rise)	High Threshold Med. Threshold Low Threshold	4.00 [1)] 3.40 [1)] 2.65 [1)]	4.25 3.60 2.90	4.50 3.80 3.15	V
$V_{IT-(LVD)}$	Reset generation threshold (V_{DD} fall)	High Threshold Med. Threshold Low Threshold	3.80 3.20 2.40	4.05 3.40 2.70	4.30 [1)] 3.65 [1)] 2.90 [1)]	
V_{hys}	LVD voltage threshold hysteresis	$V_{IT+(LVD)}$-$V_{IT-(LVD)}$		200		mV
Vt_{POR}	V_{DD} rise time rate [2)]		20		20000	µs/V
$t_{g(VDD)}$	Filtered glitch delay on V_{DD}	Not detected by the LVD			150	ns
$I_{DD(LVD)}$)	LVD/AVD current consumption			220		µA

Notes:

1. Not tested in production.

2. Not tested in production. The V_{DD} rise time rate condition is needed to ensure a correct device power-on and LVD reset. When the V_{DD} slope is outside these values, the LVD may not ensure a proper reset of the MCU.

13.3.3 Auxiliary Voltage Detector (AVD) Thresholds

T_A = -40 to 85°C, unless otherwise specified

Symbol	Parameter	Conditions	Min	Typ	Max	Unit
$V_{IT+(AVD)}$	1=>0 AVDF flag toggle threshold (V_{DD} rise)	High Threshold Med. Threshold Low Threshold	4.40 3.90 3.20	4.70 4.10 3.40	5.00 4.30 3.60	V
$V_{IT-(AVD)}$	0=>1 AVDF flag toggle threshold (V_{DD} fall)	High Threshold Med. Threshold Low Threshold	4.30 3.70 2.90	4.60 3.90 3.20	4.90 4.10 3.40	
V_{hys}	AVD voltage threshold hysteresis	$V_{IT+(AVD)}$-$V_{IT-(AVD)}$		150		mV
ΔV_{IT-}	Voltage drop between AVD flag set and LVD reset activation	V_{DD} fall		0.45		V

13.3.4 Internal RC Oscillator and PLL

The ST7 internal clock can be supplied by an internal RC oscillator and PLL (selectable by option byte).

Symbol	Parameter	Conditions	Min	Typ	Max	Unit
$V_{DD(RC)}$	Internal RC Oscillator operating voltage		2.4		5.5	V
$V_{DD(x4PLL)}$	x4 PLL operating voltage		2.4		3.3	
$V_{DD(x8PLL)}$	x8 PLL operating voltage		3.3		5.5	
$t_{STARTUP}$	PLL Startup time			60		PLL input clock (f_{PLL}) cycles

The RC oscillator and PLL characteristics are temperature-dependent and are grouped in two tables.

13.3.4.1 Devices with "6" order code suffix (tested for T_A = -40 to +85°C) @ V_{DD} = 4.5 to 5.5V

Symbol	Parameter	Conditions	Min	Typ	Max	Unit
f_{RC} 1)	Internal RC oscillator frequency	RCCR = FF (reset value), T_A=25°C, V_{DD}=5V		760		kHz
		RCCR = RCCR0 2),T_A=25°C, V_{DD}=5V		1000		
ACC_{RC}	Accuracy of Internal RC oscillator with RCCR=RCCR0 2)	T_A=25°C,V_{DD}=4.5 to 5.5V	-1		+1	%
		T_A=-40 to +85°C, V_{DD}=5V	-5		+2	%
		T_A=0 to +85°C, V_{DD}=4.5 to 5.5V	-2 3)		+2 3)	%
$I_{DD(RC)}$	RC oscillator current consumption	T_A=25°C,V_{DD}=5V		970 3)		µA
$t_{su(RC)}$	RC oscillator setup time	T_A=25°C,V_{DD}=5V			10 2)	µs
f_{PLL}	x8 PLL input clock			1 3)		MHz
t_{LOCK}	PLL Lock time 5)			2		ms
t_{STAB}	PLL Stabilization time 5)			4		ms
ACC_{PLL}	x8 PLL Accuracy	f_{RC} = 1MHz@T_A=25°C, V_{DD}=4.5 to 5.5V		0.1 4)		%
		f_{RC} = 1MHz@T_A=-40 to +85°C, V_{DD}=5V		0.1 4)		%
$t_{w(JIT)}$	PLL jitter period	f_{RC} = 1MHz		8 6)		kHz
JIT_{PLL}	PLL jitter ($\Delta f_{CPU}/f_{CPU}$)			1 6)		%
$I_{DD(PLL)}$	PLL current consumption	T_A=25°C		600 3)		µA

Notes:

1. If the RC oscillator clock is selected, to improve clock stability and frequency accuracy, it is recommended to place a decoupling capacitor, typically 100nF, between the V_{DD} and V_{SS} pins as close as possible to the ST7 device.

2. See "INTERNAL RC OSCILLATOR ADJUSTMENT" on page 24

3. Data based on characterization results, not tested in production

4. Averaged over a 4ms period. After the LOCKED bit is set, a period of t_{STAB} is required to reach ACC_{PLL} accuracy

5. After the LOCKED bit is set ACC_{PLL} is max. 10% until t_{STAB} has elapsed. See .

6. Guaranteed by design.

OPERATING CONDITIONS (Cont'd)

13.3.4.2 Devices with '"6" order code suffix (tested for T_A = -40 to +85°C) @ V_{DD} = 2.7 to 3.3V

Symbol	Parameter	Conditions	Min	Typ	Max	Unit
f_{RC} 1)	Internal RC oscillator frequency	RCCR = FF (reset value), T_A=25°C, V_{DD}= 3.0V		560		kHz
		RCCR=RCCR1 2) ,T_A=25°C, V_{DD}= 3V		700		
ACC_{RC}	Accuracy of Internal RC oscillator when calibrated with RCCR=RCCR1 2)3)	T_A=25°C,V_{DD}=3V	-2		+2	%
		T_A=25°C,V_{DD}=2.7 to 3.3V	-25		+25	%
		T_A=-40 to +85°C, V_{DD}=3V	-15		15	%
$I_{DD(RC)}$	RC oscillator current consumption	T_A=25°C,V_{DD}=3V		700 3)		µA
$t_{su(RC)}$	RC oscillator setup time	T_A=25°C,V_{DD}=3V			10 2)	µs
f_{PLL}	x4 PLL input clock			0.7 3)		MHz
t_{LOCK}	PLL Lock time 5)			2		ms
t_{STAB}	PLL Stabilization time 5)			4		ms
ACC_{PLL}	x4 PLL Accuracy	f_{RC} = 1MHz@T_A=25°C, V_{DD}=2.7 to 3.3V		0.1 4)		%
		f_{RC} = 1MHz@T_A=40 to +85°C, V_{DD}= 3V		0.1 4)		%
$t_{w(JIT)}$	PLL jitter period	f_{RC} = 1MHz		8 6)		kHz
JIT_{PLL}	PLL jitter ($\Delta f_{CPU}/f_{CPU}$)			1 6)		%
$I_{DD(PLL)}$	PLL current consumption	T_A=25°C		190 3)		µA

Notes:

1. If the RC oscillator clock is selected, to improve clock stability and frequency accuracy, it is recommended to place a decoupling capacitor, typically 100nF, between the V_{DD} and V_{SS} pins as close as possible to the ST7 device.

2. See "INTERNAL RC OSCILLATOR ADJUSTMENT" on page 24.

3. Data based on characterization results, not tested in production

4. Averaged over a 4ms period. After the LOCKED bit is set, a period of t_{STAB} is required to reach ACC_{PLL} accuracy

5. After the LOCKED bit is set ACC_{PLL} is max. 10% until t_{STAB} has elapsed. See .

6. Guaranteed by design.

OPERATING CONDITIONS (Cont'd)

Figure 49. RC Osc Freq vs V_{DD} @ T_A=25°C (Calibrated with RCCR1: 3V @ 25°C)

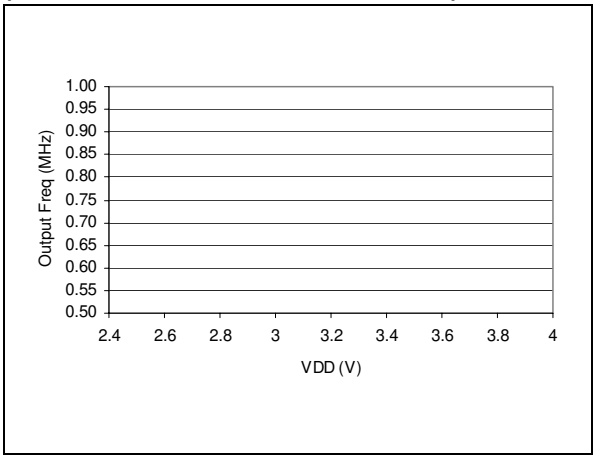

Figure 50. RC Osc Freq vs V_{DD} (Calibrated with RCCR0: 5V@ 25°C)

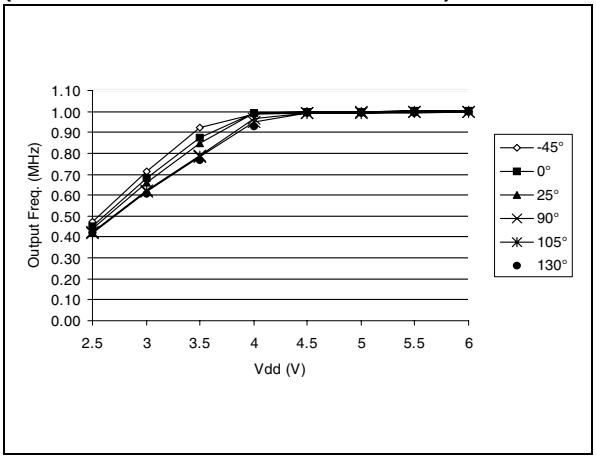

Figure 51. Typical RC oscillator Accuracy vs temperature @ V_{DD}=5V (Calibrated with RCCR0: 5V @ 25°C

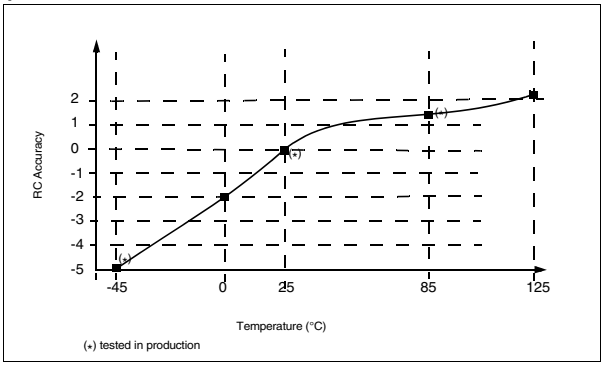

Figure 52. RC Osc Freq vs V_{DD} and RCCR Value

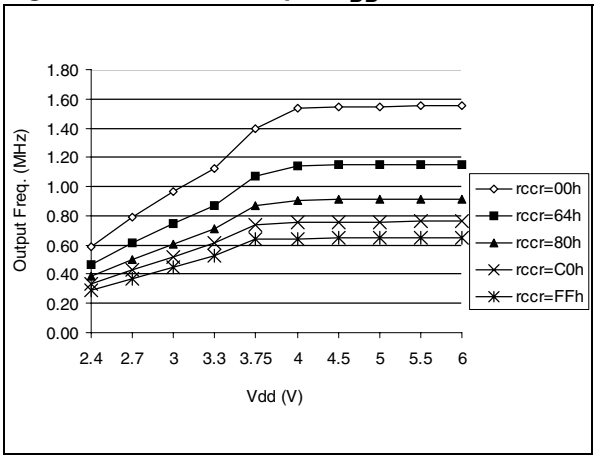

Figure 53. PLL $\Delta f_{CPU}/f_{CPU}$ versus time

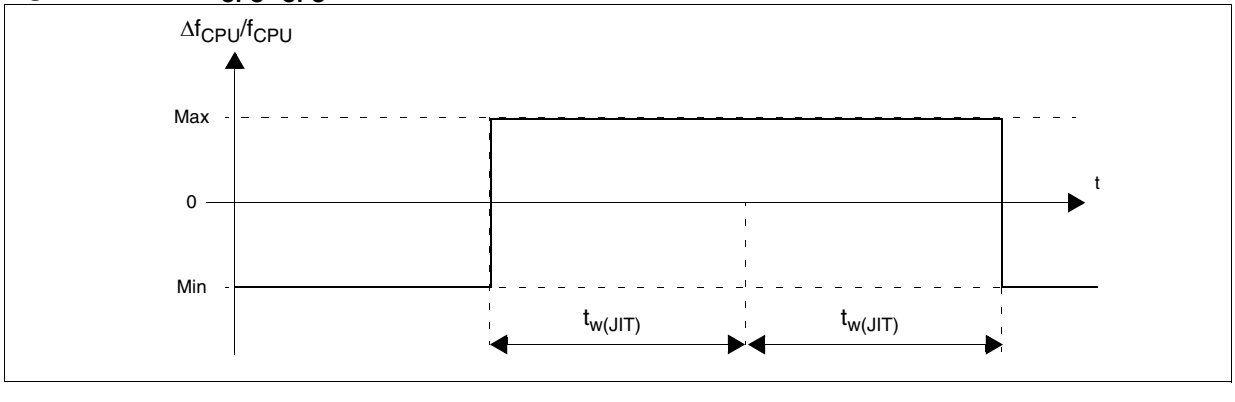

OPERATING CONDITIONS (Cont'd)

Figure 54. PLLx4 Output vs CLKIN frequency

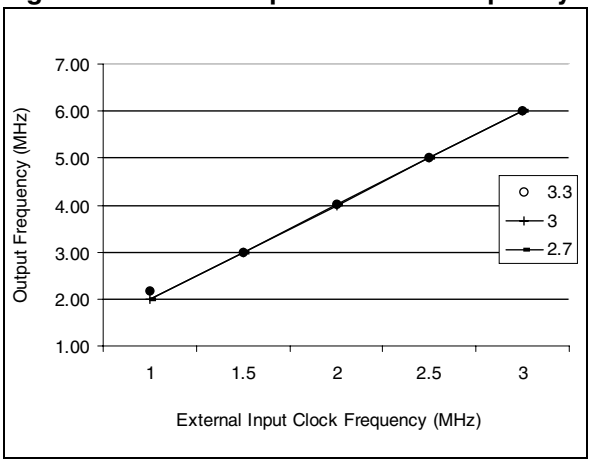

Note: $f_{OSC} = f_{CLKIN}/2*PLL4$

Figure 55. PLLx8 Output vs CLKIN frequency

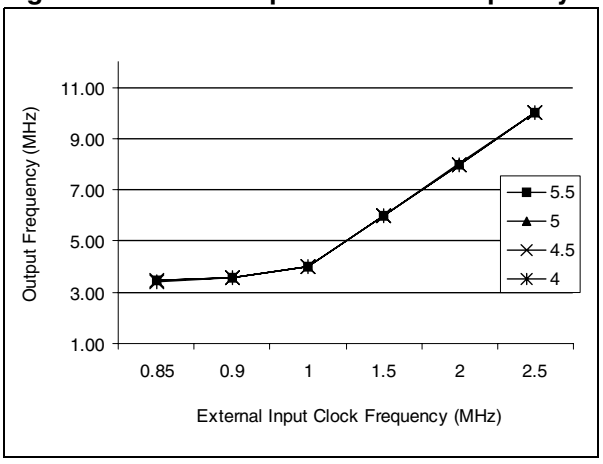

Note: $f_{OSC} = f_{CLKIN}/2*PLL8$

13.4 SUPPLY CURRENT CHARACTERISTICS

The following current consumption specified for the ST7 functional operating modes over temperature range does not take into account the clock source current consumption. To get the total device consumption, the two current values must be added (except for HALT mode for which the clock is stopped).

13.4.1 Supply Current

T_A = -40 to +85°C unless otherwise specified

Symbol	Parameter	Conditions		Typ	Max	Unit
I_{DD}	Supply current in RUN mode	V_{DD}=5.5V	f_{CPU}=8MHz 1)	4.50	7.00	mA
	Supply current in WAIT mode		f_{CPU}=8MHz 2)	1.75	2.70	
	Supply current in SLOW mode		f_{CPU}=250kHz 3)	0.75	1.13	
	Supply current in SLOW WAIT mode		f_{CPU}=250kHz 4)	0.65	1	
	Supply current in HALT mode 5)		-40°C≤T_A≤+85°C	0.50	10	µA
			-40°C≤T_A≤+105°C	TBD	TBD	
			T_A= +85°C	5	100	

Notes:

1. CPU running with memory access, all I/O pins in input mode with a static value at V_{DD} or V_{SS} (no load), all peripherals in reset state; clock input (CLKIN) driven by external square wave, LVD disabled.

2. All I/O pins in input mode with a static value at V_{DD} or V_{SS} (no load), all peripherals in reset state; clock input (CLKIN) driven by external square wave, LVD disabled.

3. SLOW mode selected with f_{CPU} based on f_{OSC} divided by 32. All I/O pins in input mode with a static value at V_{DD} or V_{SS} (no load), all peripherals in reset state; clock input (CLKIN) driven by external square wave, LVD disabled.

4. SLOW-WAIT mode selected with f_{CPU} based on f_{OSC} divided by 32. All I/O pins in input mode with a static value at V_{DD} or V_{SS} (no load), all peripherals in reset state; clock input (CLKIN) driven by external square wave, LVD disabled.

5. All I/O pins in output mode with a static value at V_{SS} (no load), LVD disabled. Data based on characterization results, tested in production at V_{DD} max and f_{CPU} max.

Figure 56. Typical I_{DD} in RUN vs. f_{CPU}

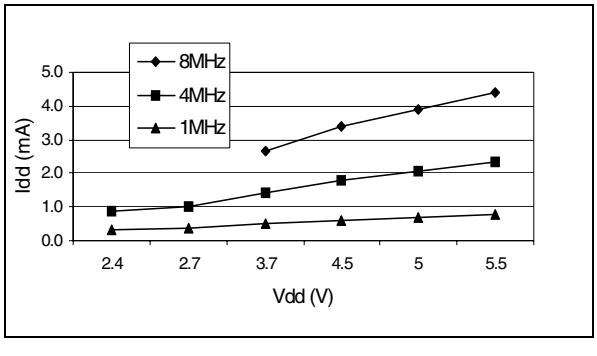

Figure 57. Typical I_{DD} in SLOW vs. f_{CPU}

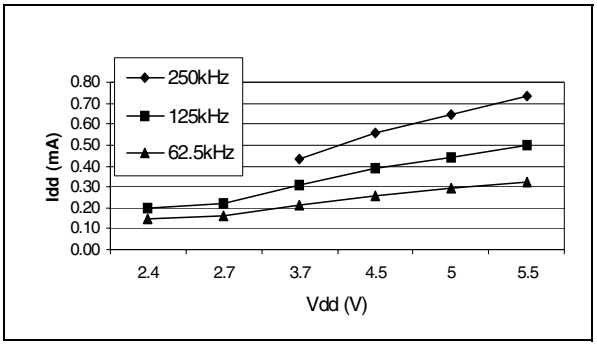

SUPPLY CURRENT CHARACTERISTICS (Cont'd)

Figure 58. Typical I_{DD} in WAIT vs. f_{CPU}

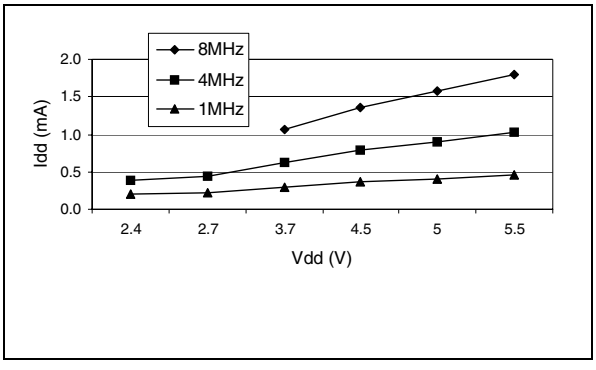

Figure 59. Typical I_{DD} in SLOW-WAIT vs. f_{CPU}

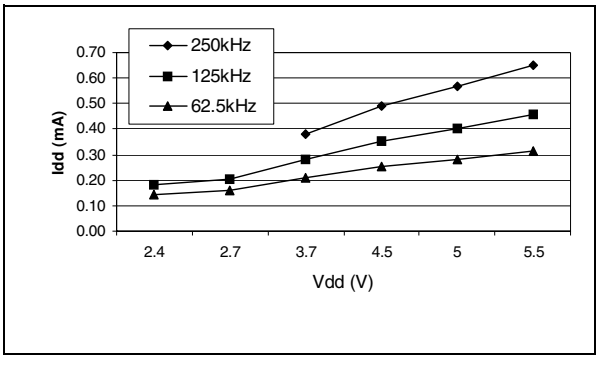

Figure 60. Typical I_{DD} vs. Temperature at V_{DD} = 5V and f_{CPU} = 8MHz

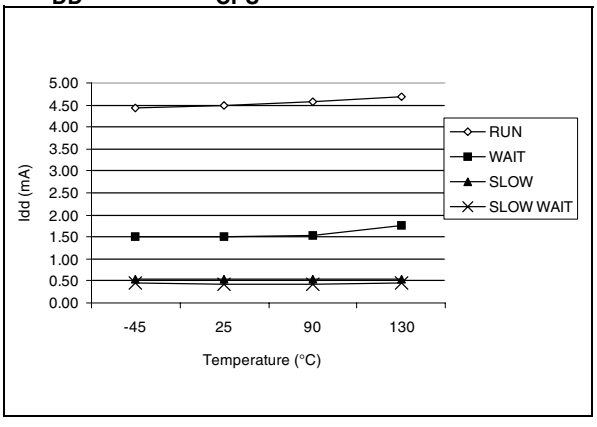

13.4.2 On-chip peripherals

Symbol	Parameter	Conditions		Typ	Unit
$I_{DD(AT)}$	12-bit Auto-Reload Timer supply current [1]	f_{CPU}=4MHz	V_{DD}=3.0V	150	µA
		f_{CPU}=8MHz	V_{DD}=5.0V	250	
$I_{DD(SPI)}$	SPI supply current [2]	f_{CPU}=4MHz	V_{DD}=3.0V	50	
		f_{CPU}=8MHz	V_{DD}=5.0V	300	
$I_{DD(ADC)}$	ADC supply current when converting [3]	f_{ADC}=4MHz	V_{DD}=3.0V	780	
			V_{DD}=5.0V	1100	

1. Data based on a differential I_{DD} measurement between reset configuration (timer stopped) and a timer running in PWM mode at f_{cpu}=8MHz.

2. Data based on a differential I_{DD} measurement between reset configuration and a permanent SPI master communication (data sent equal to 55h).

3. Data based on a differential I_{DD} measurement between reset configuration and continuous A/D conversions with amplifier off.

13.5 CLOCK AND TIMING CHARACTERISTICS

Subject to general operating conditions for V_{DD}, f_{OSC}, and T_A.

13.5.1 General Timings

Symbol	Parameter [1]	Conditions	Min	Typ [2]	Max	Unit
$t_{c(INST)}$	Instruction cycle time	f_{CPU}=8MHz	2	3	12	t_{CPU}
			250	375	1500	ns
$t_{v(IT)}$	Interrupt reaction time [3] $t_{v(IT)} = \Delta t_{c(INST)} + 10$	f_{CPU}=8MHz	10		22	t_{CPU}
			1.25		2.75	µs

13.5.2 External Clock Source

Symbol	Parameter	Conditions	Min	Typ	Max	Unit
V_{CLKINH}	CLKIN input pin high level voltage	see	$0.7xV_{DD}$		V_{DD}	V
V_{CLKINL}	CLKIN input pin low level voltage		V_{SS}		$0.3xV_{DD}$	
$t_{w(CLKINH)}$ $t_{w(CLKINL)}$	CLKIN high or low time [4]		15			ns
$t_{r(CLKIN)}$ $t_{f(CLKIN)}$	CLKIN rise or fall time [4]				15	
I_L	CLKIN Input leakage current	$V_{SS} \leq V_{IN} \leq V_{DD}$			±1	µA

Notes:

1. Guaranteed by Design. Not tested in production.

2. Data based on typical application software.

3. Time measured between interrupt event and interrupt vector fetch. $\Delta t_{c(INST)}$ is the number of t_{CPU} cycles needed to finish the current instruction execution.

4. Data based on design simulation and/or technology characteristics, not tested in production.

Figure 61. Typical Application with an External Clock Source

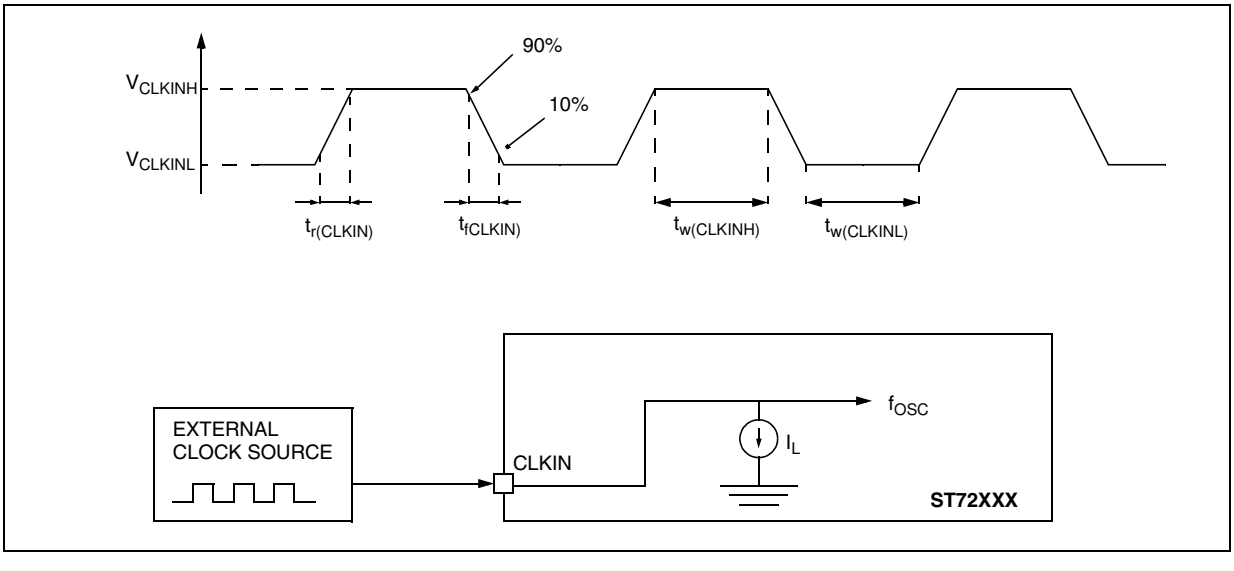

13.6 MEMORY CHARACTERISTICS

T_A = -40°C to 105°C, unless otherwise specified

13.6.1 RAM and Hardware Registers

Symbol	Parameter	Conditions	Min	Typ	Max	Unit
V_{RM}	Data retention mode [1]	HALT mode (or RESET)	1.6			V

13.6.2 FLASH Program Memory

Symbol	Parameter	Conditions	Min	Typ	Max	Unit
V_{DD}	Operating voltage for Flash write/erase		2.4		5.5	V
t_{prog}	Programming time for 1~32 bytes [2]	T_A=–40 to +105°C		5	10	ms
	Programming time for 1.5 kBytes	T_A=+25°C		0.24	0.48	s
t_{RET}	Data retention [4]	T_A=+55°C[3]	20			years
N_{RW}	Write erase cycles	T_A=+25°C	10K [7]			cycles
I_{DD}	Supply current	Read / Write / Erase modes f_{CPU} = 8MHz, V_{DD} = 5.5V			2.6 [6]	mA
		No Read/No Write Mode			100	µA
		Power down mode / HALT		0	0.1	µA

13.6.3 EEPROM Data Memory

Symbol	Parameter	Conditions	Min	Typ	Max	Unit
V_{DD}	Operating voltage for EEPROM write/erase		2.4		5.5	V
t_{prog}	Programming time for 1~32 bytes	T_A=–40 to +105°C		5	10	ms
t_{ret}	Data retention [4]	T_A=+55°C [3]	20			years
N_{RW}	Write erase cycles	T_A=+25°C	300K [7]			cycles

Notes:

1. Minimum V_{DD} supply voltage without losing data stored in RAM (in HALT mode or under RESET) or in hardware registers (only in HALT mode). Guaranteed by construction, not tested in production.

2. Up to 32 bytes can be programmed at a time.

3. The data retention time increases when the T_A decreases.

4. Data based on reliability test results and monitored in production.

5. Data based on characterization results, not tested in production.

6. Guaranteed by Design. Not tested in production.

7. Design target value pending full product characterization.

13.7 EMC (ELECTROMAGNETIC COMPATIBILITY) CHARACTERISTICS

Susceptibility tests are performed on a sample basis during product characterization.

13.7.1 Functional EMS (Electro Magnetic Susceptibility)

Based on a simple running application on the product (toggling two -+LEDs through I/O ports), the product is stressed by two electro magnetic events until a failure occurs (indicated by the LEDs).

- **ESD**: Electro-Static Discharge (positive and negative) is applied on all pins of the device until a functional disturbance occurs. This test conforms with the IEC 1000-4-2 standard.
- **FTB**: A Burst of Fast Transient voltage (positive and negative) is applied to V_{DD} and V_{SS} through a 100pF capacitor, until a functional disturbance occurs. This test conforms with the IEC 1000-4-4 standard.

A device reset allows normal operations to be resumed. The test results are given in the table below based on the EMS levels and classes defined in application note AN1709.

13.7.1.1 Designing hardened software to avoid noise problems

EMC characterization and optimization are performed at component level with a typical application environment and simplified MCU software. It should be noted that good EMC performance is highly dependent on the user application and the software in particular.

Therefore it is recommended that the user applies EMC software optimization and prequalification tests in relation with the EMC level requested for his application.

Software recommendations:

The software flowchart must include the management of runaway conditions such as:

– Corrupted program counter

– Unexpected reset

– Critical Data corruption (control registers...)

Prequalification trials:

Most of the common failures (unexpected reset and program counter corruption) can be reproduced by manually forcing a low state on the RESET pin or the Oscillator pins for 1 second.

To complete these trials, ESD stress can be applied directly on the device, over the range of specification values. When unexpected behaviour is detected, the software can be hardened to prevent unrecoverable errors occurring (see application note AN1015).

Symbol	Parameter	Conditions	Level/ Class
V_{FESD}	Voltage limits to be applied on any I/O pin to induce a functional disturbance	V_{DD}=5V, T_A=+25°C, f_{OSC}=8MHz conforms to IEC 1000-4-2	2B
V_{FFTB}	Fast transient voltage burst limits to be applied through 100pF on V_{DD} and V_{DD} pins to induce a functional disturbance	V_{DD}=5V, T_A=+25°C, f_{OSC}=8MHz conforms to IEC 1000-4-4	3B

13.7.2 EMI (Electromagnetic interference)

Based on a simple application running on the product (toggling two LEDs through the I/O ports), the product is monitored in terms of emission. This emission test is in line with the norm SAE J 1752/3 which specifies the board and the loading of each pin.

Table 20: EMI emissions

Symbol	Parameter	Conditions	Monitored Frequency Band	Max vs. [f_{OSC}/f_{CPU}]		Unit
				1/4MHz	1/8MHz	
S_{EMI}	Peak level	V_{DD}=5V, T_A=+25°C, SO16 package, conforming to SAE J 1752/3	0.1MHz to 30MHz	8	14	dBµV
			30MHz to 130MHz	27	32	
			130MHz to 1GHz	26	28	
			SAE EMI Level	3.5	4	-

Note:

1. Data based on characterization results, not tested in production.

EMC CHARACTERISTICS (Cont'd)

13.7.3 Absolute Maximum Ratings (Electrical Sensitivity)

Based on two different tests (ESD and LU) using specific measurement methods, the product is stressed in order to determine its performance in terms of electrical sensitivity.

13.7.3.1 Electro-Static Discharge (ESD)

Electro-Static Discharges (a positive then a negative pulse separated by 1 second) are applied to the pins of each sample according to each pin combination. The sample size depends on the number of supply pins in the device (3 parts*(n+1) supply pin). This test conforms to the JESD22-A114A standard.

ESD absolute maximum ratings

Symbol	Ratings	Conditions	Maximum value [1]	Unit
$V_{ESD(HBM)}$	Electro-static discharge voltage (Human Body Model)	T_A=+25°C conforming to JESD22-A114	4000	V

Notes:

1. Data based on characterization results, not tested in production.

13.7.3.2 Static Latch-Up

- **LU**: Two complementary static tests are required on 10 parts to assess the latch-up performance. A supply overvoltage (applied to each power supply pin) and a current injection (applied to each input, output and configurable I/O pin) are performed on each sample. These test are compliant with the EIA/JESD 78 IC latch-up standard.

Electrical Sensitivities

Symbol	Parameter	Conditions	Class [1]
LU	Static latch-up class	T_A=+25°C conforming to JESD78A	II level A

Note:

1. Class description: A Class is an STMicroelectronics internal specification. All its limits are higher than the JEDEC specifications, that means when a device belongs to Class A it exceeds the JEDEC standard. B Class strictly covers all the JEDEC criteria (international standard).

13.8 I/O PORT PIN CHARACTERISTICS

13.8.1 General Characteristics

Subject to general operating conditions for V_{DD}, f_{OSC}, and T_A unless otherwise specified.

Symbol	Parameter	Conditions		Min	Typ	Max	Unit
V_{IL}	Input low level voltage			V_{SS} - 0.3		$0.3xV_{DD}$	V
V_{IH}	Input high level voltage			$0.7xV_{DD}$		V_{DD} + 0.3	
V_{hys}	Schmitt trigger voltage hysteresis [1]				400		mV
I_L	Input leakage current	$V_{SS} \leq V_{IN} \leq V_{DD}$				±1	µA
I_S	Static current consumption induced by each floating input pin[2]	Floating input mode			400		µA
R_{PU}	Weak pull-up equivalent resistor[3]	$V_{IN}=V_{SS}$	V_{DD}=5V	50	120	250	kΩ
			V_{DD}=3V		160		
C_{IO}	I/O pin capacitance				5		pF
$t_{f(IO)out}$	Output high to low level fall time [1]	C_L=50pF Between 10% and 90%			25		ns
$t_{r(IO)out}$	Output low to high level rise time [1]				25		
$t_{w(IT)in}$	External interrupt pulse time [4]			1			t_{CPU}

Notes:

1. Data based on characterization results, not tested in production.

2. Configuration not recommended, all unused pins must be kept at a fixed voltage: using the output mode of the I/O for example or an external pull-up or pull-down resistor (see). Static peak current value taken at a fixed V_{IN} value, based on design simulation and technology characteristics, not tested in production. This value depends on V_{DD} and temperature values.

3. The R_{PU} pull-up equivalent resistor is based on a resistive transistor (corresponding I_{PU} current characteristics described in).

4. To generate an external interrupt, a minimum pulse width has to be applied on an I/O port pin configured as an external interrupt source.

Figure 62. Two typical applications with unused I/O pin configured as input

Caution: During normal operation the ICCCLK pin must be pulled- up, internally or externally (external pull-up of 10k mandatory in noisy environment). This is to avoid entering ICC mode unexpectedly during a reset.

Note: I/O can be left unconnected if it is configured as output (0 or 1) by the software. This has the advantage of greater EMC robustness and lower cost.

Figure 63. Typical I_{PU} vs. V_{DD} with $V_{IN}=V_{SS}$

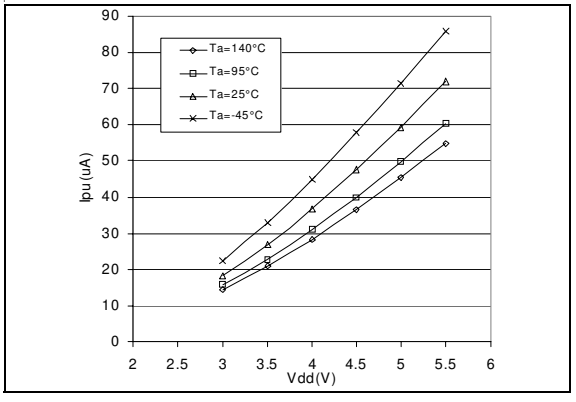

I/O PORT PIN CHARACTERISTICS (Cont'd)

13.8.2 Output Driving Current

Subject to general operating conditions for V_{DD}, f_{CPU}, and T_A unless otherwise specified.

Symbol	Parameter	Conditions			Min	Max	Unit
V_{OL} 1)	Output low level voltage for a standard I/O pin when 8 pins are sunk at same time (see)	V_{DD}=5V	I_{IO}=+5mA	$T_A \leq 85°C$		1.0	V
				$T_A \geq 85°C$		1.2	
			I_{IO}=+2mA	$T_A \leq 85°C$		0.4	
				$T_A \geq 85°C$		0.5	
	Output low level voltage for a high sink I/O pin when 4 pins are sunk at same time (see)		I_{IO}=+20mA,	$T_A \leq 85°C$		1.3	
				$T_A \geq 85°C$		1.5	
			I_{IO}=+8mA	$T_A \leq 85°C$		0.75	
				$T_A \geq 85°C$		0.85	
V_{OH} 2)	Output high level voltage for an I/O pin when 4 pins are sourced at same time (see)		I_{IO}=-5mA,	$T_A \leq 85°C$	V_{DD}-1.5		
				$T_A \geq 85°C$	V_{DD}-1.6		
			I_{IO}=-2mA	$T_A \leq 85°C$	V_{DD}-0.8		
				$T_A \geq 85°C$	V_{DD}-1.0		
V_{OL} 1)3)	Output low level voltage for a standard I/O pin when 8 pins are sunk at same time (see)	V_{DD}=3.3V	I_{IO}=+2mA	$T_A \leq 85°C$		0.5	
				$T_A \geq 85°C$		0.6	
	Output low level voltage for a high sink I/O pin when 4 pins are sunk at same time		I_{IO}=+8mA	$T_A \leq 85°C$		0.5	
				$T_A \geq 85°C$		0.6	
V_{OH} 2)3)	Output high level voltage for an I/O pin when 4 pins are sourced at same time		I_{IO}=-2mA	$T_A \leq 85°C$	V_{DD}-0.8		
				$T_A \geq 85°C$	V_{DD}-1.0		
V_{OL} 1)3)	Output low level voltage for a standard I/O pin when 8 pins are sunk at same time	V_{DD}=2.7V	I_{IO}=+2mA	$T_A \leq 85°C$		0.6	
				$T_A \geq 85°C$		0.7	
	Output low level voltage for a high sink I/O pin when 4 pins are sunk at same time		I_{IO}=+8mA	$T_A \leq 85°C$		0.6	
				$T_A \geq 85°C$		0.7	
V_{OH} 2)3)	Output high level voltage for an I/O pin when 4 pins are sourced at same time (see)		I_{IO}=-2mA	$T_A \leq 85°C$	V_{DD}-0.9		
				$T_A \geq 85°C$	V_{DD}-1.0		

Notes:

1. The I_{IO} current sunk must always respect the absolute maximum rating specified in and the sum of I_{IO} (I/O ports and control pins) must not exceed I_{VSS}.

2. The I_{IO} current sourced must always respect the absolute maximum rating specified in and the sum of I_{IO} (I/O ports and control pins) must not exceed I_{VDD}.

3. Not tested in production, based on characterization results.

I/O PORT PIN CHARACTERISTICS (Cont'd)

Figure 64. Typical V_{OL} at V_{DD}=3.3V (standard)

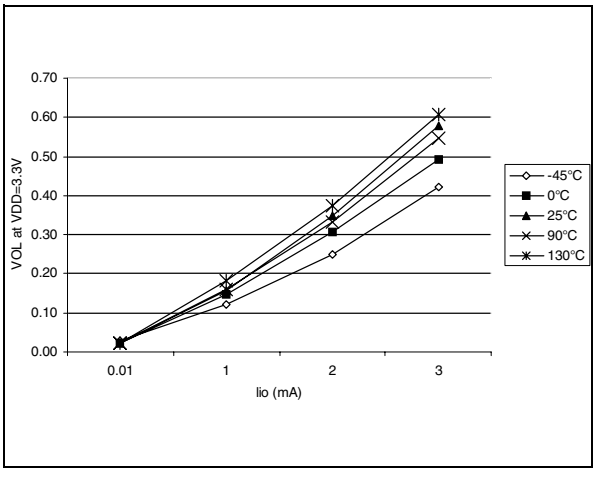

Figure 65. Typical V_{OL} at V_{DD}=5V (standard)

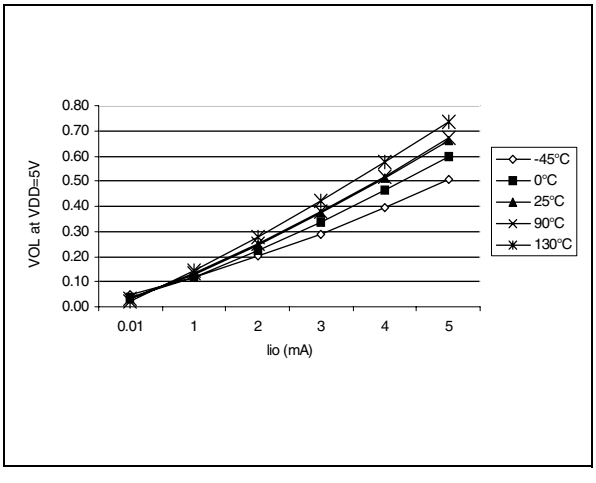

Figure 66. Typical V_{OL} at V_{DD}=5V (high-sink)

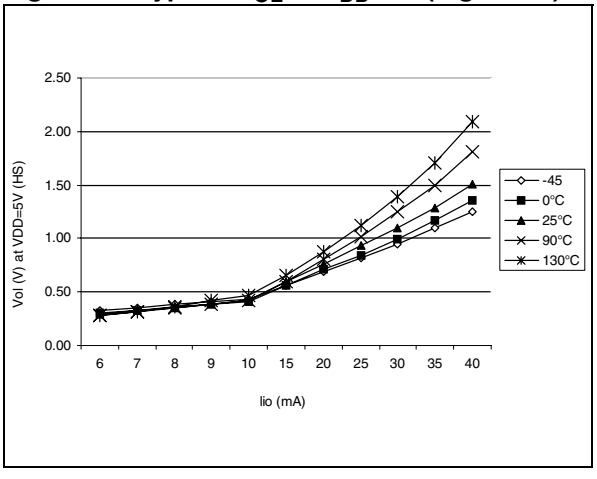

Figure 67. Typical V_{OL} at V_{DD}=3V (high-sink)

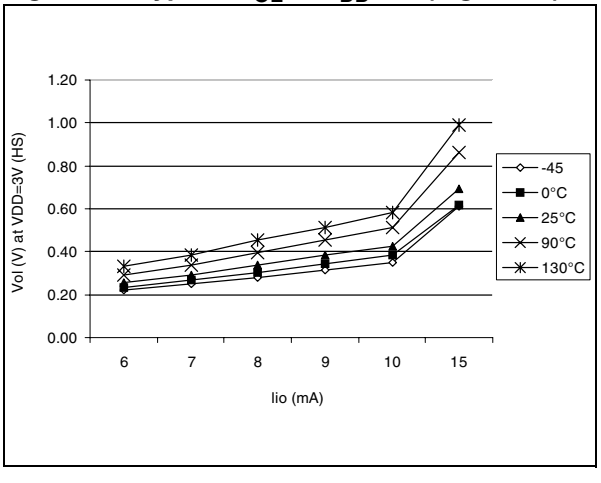

Figure 68. Typical V_{DD}-V_{OH} at V_{DD}=2.4V

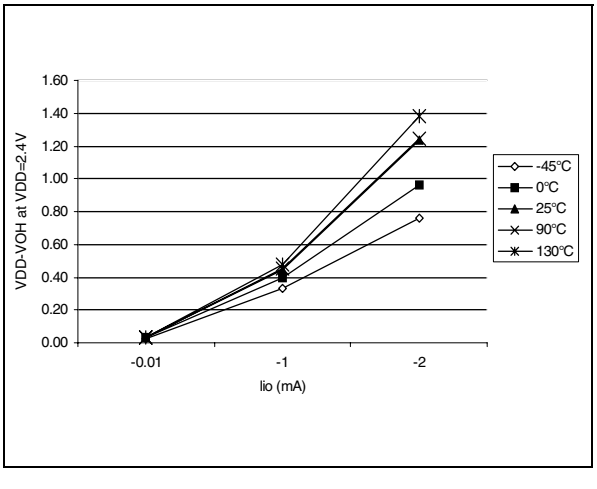

Figure 69. Typical V_{DD}-V_{OH} at V_{DD}=2.7V

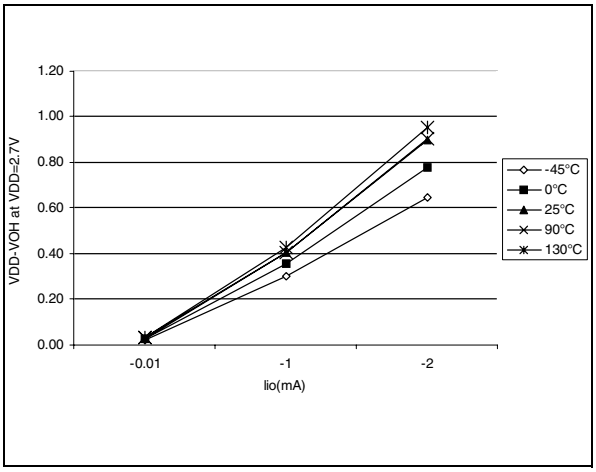

Figure 70. Typical V_{DD}-V_{OH} at V_{DD}=3V

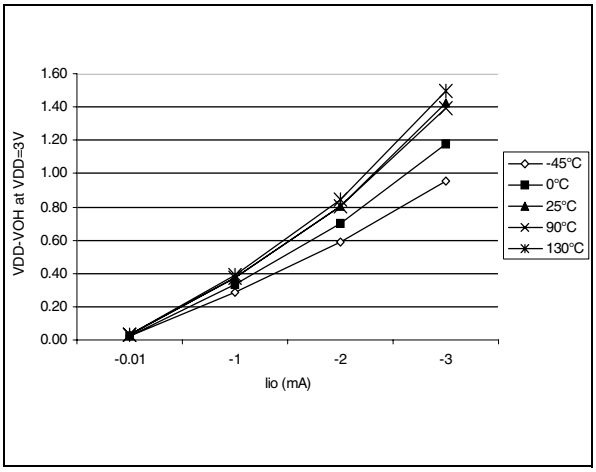

Figure 71. Typical V_{DD}-V_{OH} at V_{DD}=4V

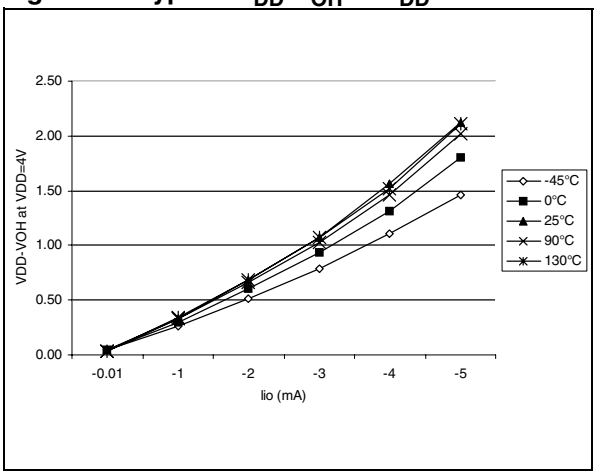

Figure 72. Typical V_{DD}-V_{OH} at V_{DD}=5V

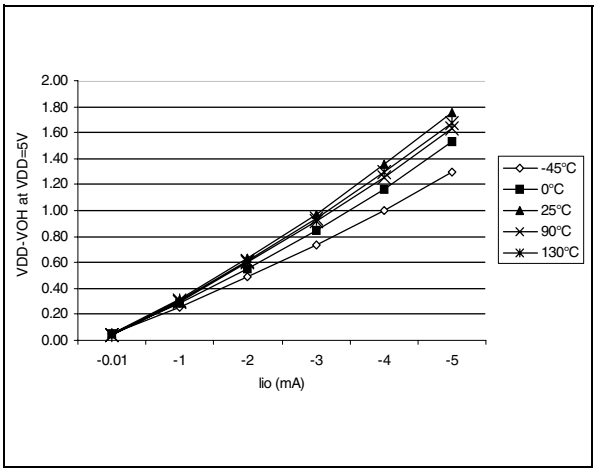

Figure 73. Typical V_{OL} vs. V_{DD} (standard I/Os)

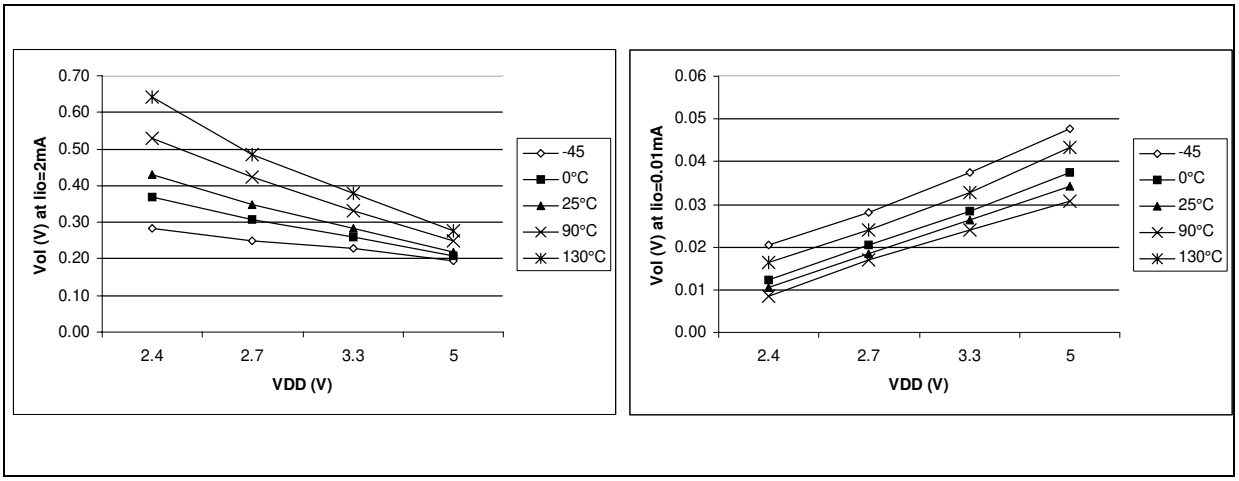

Figure 74. Typical V_{OL} vs. V_{DD} (high-sink I/Os)

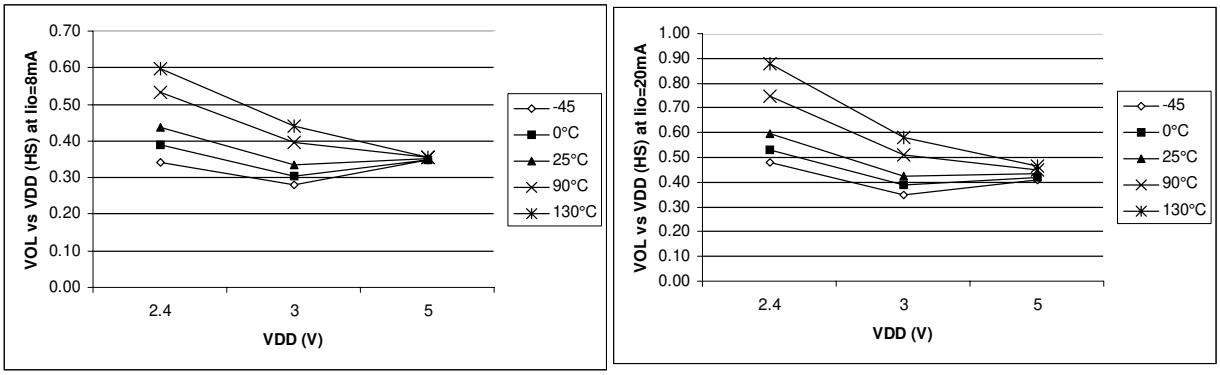

Figure 75. Typical V_{DD}-V_{OH} vs. V_{DD}

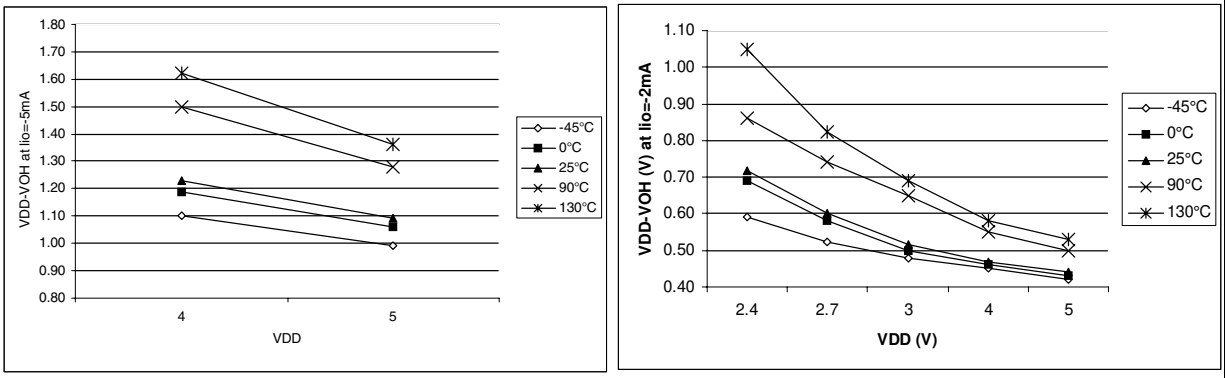

13.9 CONTROL PIN CHARACTERISTICS

13.9.1 Asynchronous $\overline{\text{RESET}}$ Pin

T_A = -40°C to 105°C, unless otherwise specified

Symbol	Parameter	Conditions		Min	Typ	Max	Unit
V_{IL}	Input low level voltage			V_{SS} - 0.3		0.3xV_{DD}	V
V_{IH}	Input high level voltage			0.7xV_{DD}		V_{DD} + 0.3	
V_{hys}	Schmitt trigger voltage hysteresis [1]				2		V
V_{OL}	Output low level voltage [2]	V_{DD}=5V	I_{IO}=+5mA $T_A \leq 85°C$ $T_A \leq 105°C$		0.5	1.0 1.2	V
			I_{IO}=+2mA $T_A \leq 85°C$ $T_A \leq 105°C$		0.2	0.4 0.5	
R_{ON}	Pull-up equivalent resistor [3] [1]	V_{DD}=5V		20	40	80	kΩ
$t_{w(RSTL)out}$	Generated reset pulse duration	Internal reset sources			30		µs
$t_{h(RSTL)in}$	External reset pulse hold time [4]			20			µs
$t_{g(RSTL)in}$	Filtered glitch duration				200		ns

Notes:

1. Data based on characterization results, not tested in production.

2. The I_{IO} current sunk must always respect the absolute maximum rating specified in and the sum of I_{IO} (I/O ports and control pins) must not exceed I_{VSS}.

3. The R_{ON} pull-up equivalent resistor is based on a resistive transistor. Specified for voltages on $\overline{\text{RESET}}$ pin between V_{ILmax} and V_{DD}

4. To guarantee the reset of the device, a minimum pulse has to be applied to the $\overline{\text{RESET}}$ pin. All short pulses applied on $\overline{\text{RESET}}$ pin with a duration below $t_{h(RSTL)in}$ can be ignored.

CONTROL PIN CHARACTERISTICS (Cont'd)

Figure 76. $\overline{\text{RESET}}$ pin protection when LVD is enabled.[1)2)3)4)]

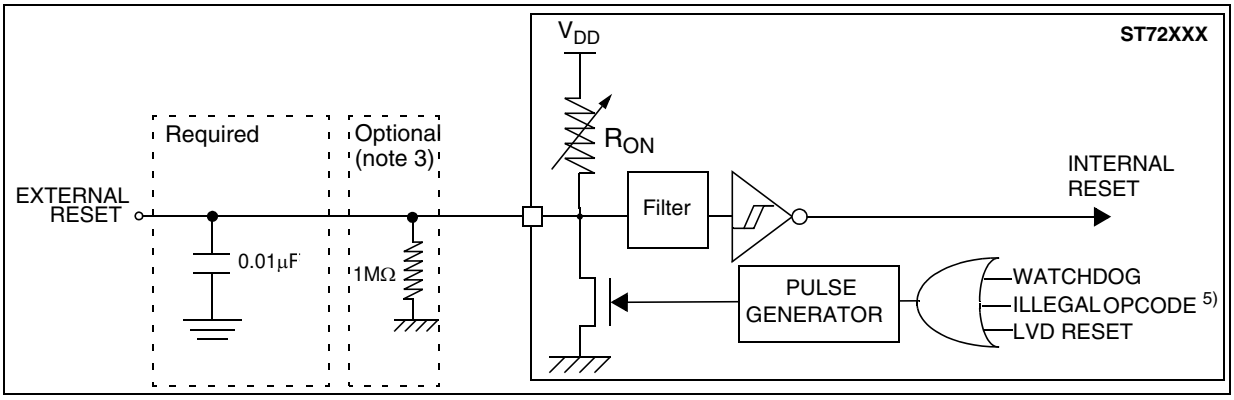

Figure 77. $\overline{\text{RESET}}$ pin protection when LVD is disabled.[1)]

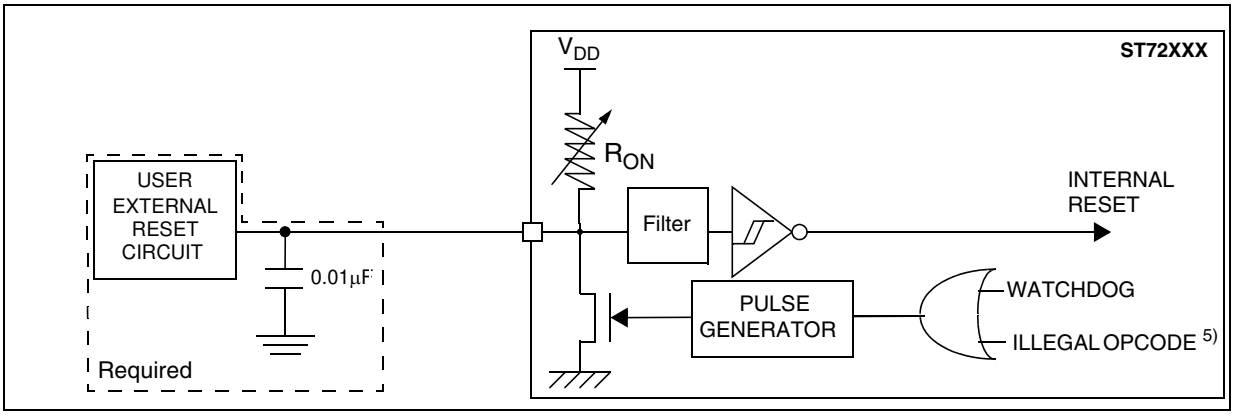

Note 1:

- The reset network protects the device against parasitic resets.
- The output of the external reset circuit must have an open-drain output to drive the ST7 reset pad. Otherwise the device can be damaged when the ST7 generates an internal reset (LVD or watchdog).
- Whatever the reset source is (internal or external), the user must ensure that the level on the $\overline{\text{RESET}}$ pin can go below the V_{IL} max. level specified in . Otherwise the reset will not be taken into account internally.
- Because the reset circuit is designed to allow the internal RESET to be output in the $\overline{\text{RESET}}$ pin, the user must ensure that the current sunk on the $\overline{\text{RESET}}$ pin is less than the absolute maximum value specified for $I_{INJ(RESET)}$ in .

Note 2: When the LVD is enabled, it is recommended not to connect a pull-up resistor or capacitor. A 10nF pull-down capacitor is required to filter noise on the reset line.

Note 3: In case a capacitive power supply is used, it is recommended to connect a 1MΩ pull-down resistor to the $\overline{\text{RESET}}$ pin to discharge any residual voltage induced by the capacitive effect of the power supply (this will add 5µA to the power consumption of the MCU).

Note 4: Tips when using the LVD:

- 1. Check that all recommendations related to ICCCLK and reset circuit have been applied (see caution in on page 7 and notes above)
- 2. Check that the power supply is properly decoupled (100nF + 10µF close to the MCU). Refer to AN1709 and AN2017. If this cannot be done, it is recommended to put a 100nF + 1MΩ pull-down on the $\overline{\text{RESET}}$ pin.
- 3. The capacitors connected on the RESET pin and also the power supply are key to avoid any start-up marginality. In most cases, steps 1 and 2 above are sufficient for a robust solution. Otherwise: replace 10nF pull-down on the $\overline{\text{RESET}}$ pin with a 5µF to 20µF capacitor."

Note 5: See "Illegal Opcode Reset" on page 78. for more details on illegal opcode reset conditions

13.10 COMMUNICATION INTERFACE CHARACTERISTICS

13.10.1 SPI - Serial Peripheral Interface

Subject to general operating conditions for V_{DD}, f_{OSC}, and T_A unless otherwise specified.

Refer to I/O port characteristics for more details on the input/output alternate function characteristics ($\overline{SS}$, SCK, MOSI, MISO).

Symbol	Parameter	Conditions	Min	Max	Unit
$f_{SCK} = 1/t_{c(SCK)}$	SPI clock frequency	Master f_{CPU}=8MHz	$f_{CPU}/128$ = 0.0625	$f_{CPU}/4$ = 2	MHz
		Slave f_{CPU}=8MHz	0	$f_{CPU}/2$ = 4	
$t_{r(SCK)}$ $t_{f(SCK)}$	SPI clock rise and fall time		see I/O port pin description		
$t_{su(\overline{SS})}$ [1]	$\overline{SS}$ setup time [4]	Slave	T_{CPU} + 50		ns
$t_{h(\overline{SS})}$ [1]	$\overline{SS}$ hold time	Slave	120		
$t_{w(SCKH)}$ [1] $t_{w(SCKL)}$ [1]	SCK high and low time	Master Slave	100 90		
$t_{su(MI)}$ [1] $t_{su(SI)}$ [1]	Data input setup time	Master Slave	100 100		
$t_{h(MI)}$ [1] $t_{h(SI)}$ [1]	Data input hold time	Master Slave	100 100		
$t_{a(SO)}$ [1]	Data output access time	Slave	0	120	
$t_{dis(SO)}$ [1]	Data output disable time	Slave		240	
$t_{v(SO)}$ [1]	Data output valid time	Slave (after enable edge)		120	
$t_{h(SO)}$ [1]	Data output hold time		0		
$t_{v(MO)}$ [1]	Data output valid time	Master (after enable edge)		120	
$t_{h(MO)}$ [1]	Data output hold time		0		

Figure 78. SPI Slave Timing Diagram with CPHA=0 [3]

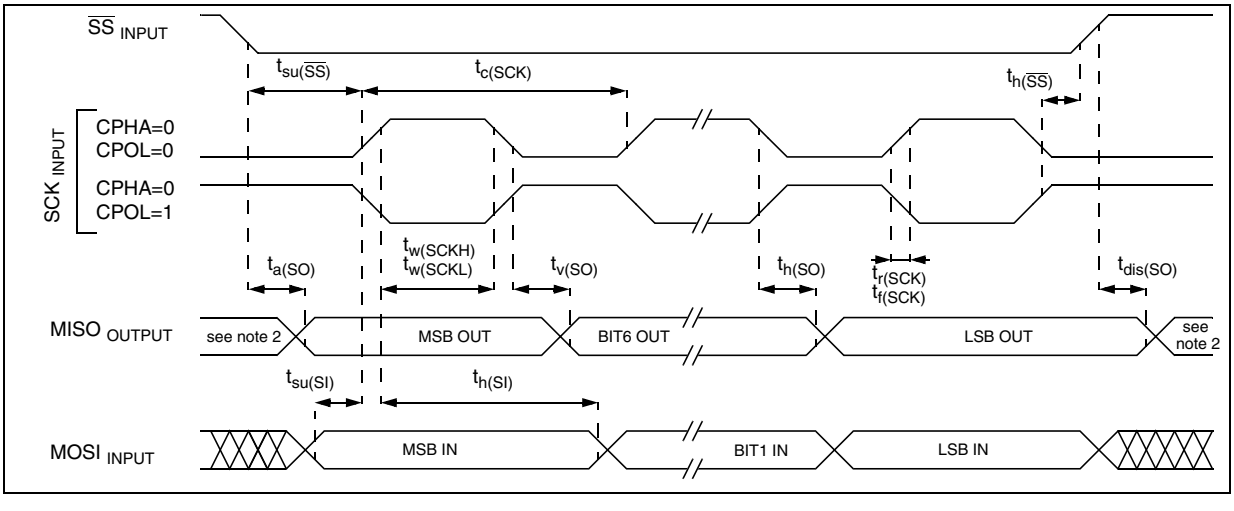

Notes:

1. Data based on design simulation and/or characterisation results, not tested in production.

2. When no communication is on-going the data output line of the SPI (MOSI in master mode, MISO in slave mode) has its alternate function capability released. In this case, the pin status depends on the I/O port configuration.

3. Measurement points are done at CMOS levels: $0.3xV_{DD}$ and $0.7xV_{DD}$.

4. Depends on f_{CPU}. For example, if f_{CPU}=8MHz, then $T_{CPU} = 1/f_{CPU}$ =125ns and $t_{su(\overline{SS})}$=175ns

COMMUNICATION INTERFACE CHARACTERISTICS (Cont'd)

Figure 79. SPI Slave Timing Diagram with CPHA=1[1)]

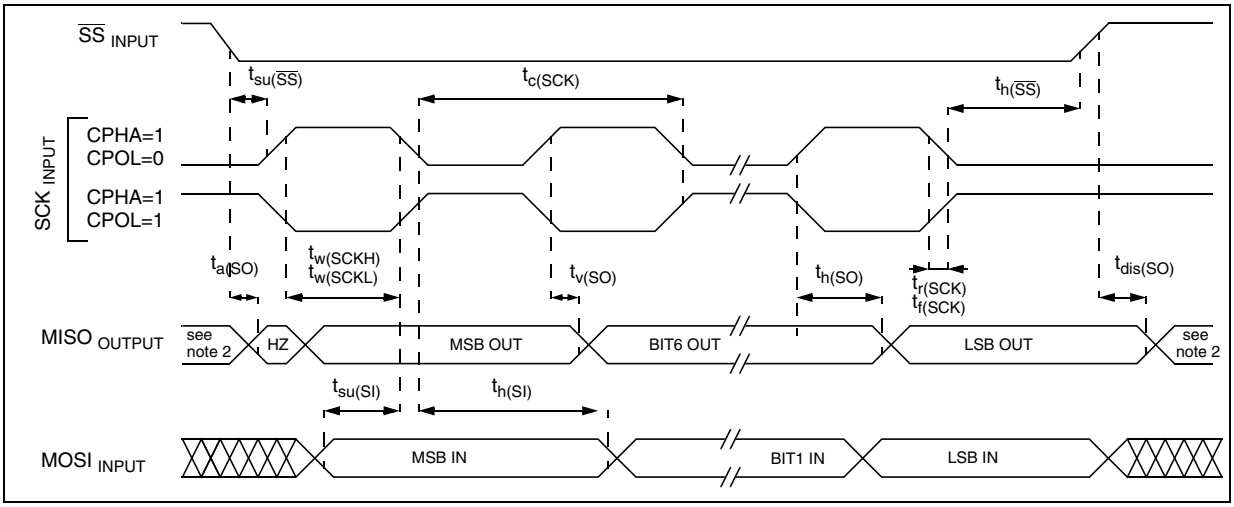

Figure 80. SPI Master Timing Diagram [1)]

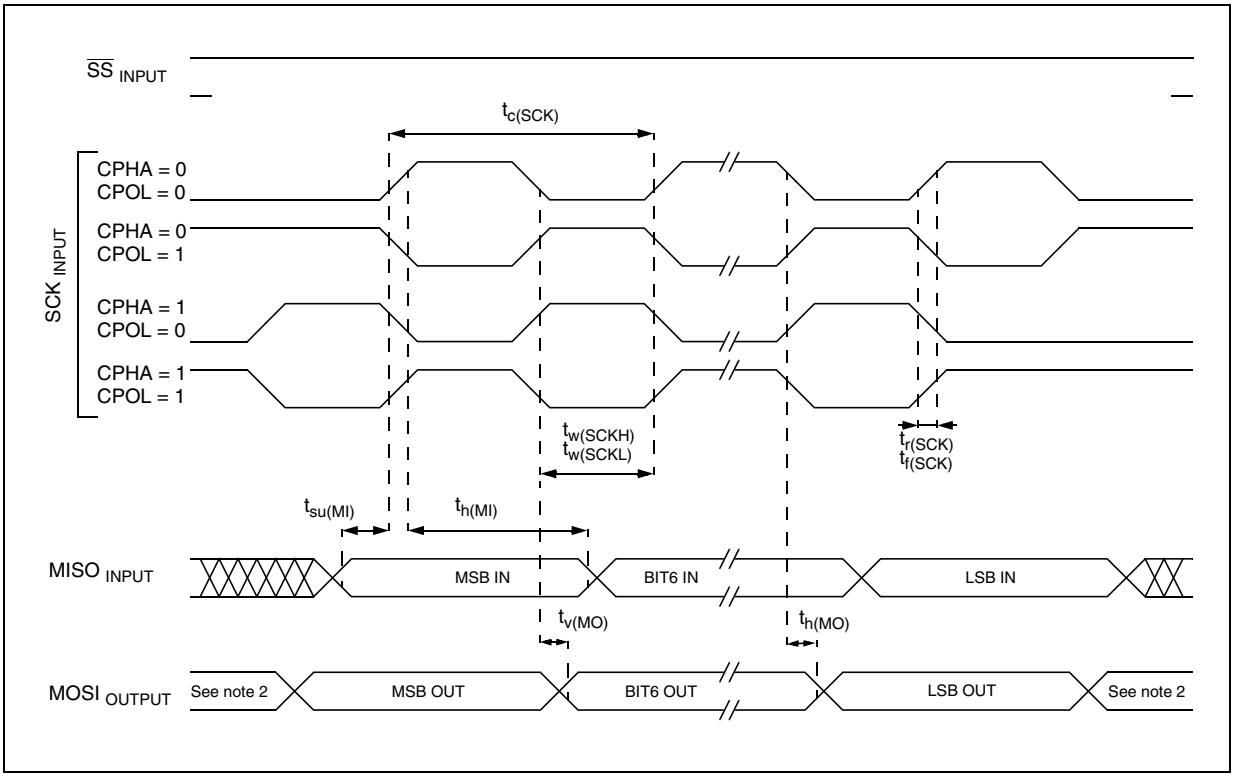

Notes:

1. Measurement points are done at CMOS levels: $0.3xV_{DD}$ and $0.7xV_{DD}$.

2. When no communication is on-going the data output line of the SPI (MOSI in master mode, MISO in slave mode) has its alternate function capability released. In this case, the pin status depends of the I/O port configuration.

13.11 8-BIT ADC CHARACTERISTICS

T_A = -40°C to 85°C, unless otherwise specified

Symbol	Parameter	Conditions	Min	Typ	Max	Unit
f_{ADC}	ADC clock frequency				4	MHz
V_{AIN}	Conversion voltage range		V_{SS}		V_{DD}	V
R_{AIN}	External input resistor				10 [1]	kΩ
C_{ADC}	Internal sample and hold capacitor	V_{DD}=5V		3		pF
t_{STAB}	Stabilization time after ADC enable	f_{CPU}=8MHz, f_{ADC}=4MHz	0 [2]			µs
t_{CONV}	Conversion time (t_{SAMPLE}+t_{HOLD})		3			
t_{SAMPLE}	Sample capacitor loading time		4			$1/f_{ADC}$
t_{HOLD}	Hold conversion time		8			

Notes:

1. Unless otherwise specified, typical data are based on T_A=25°C and V_{DD}-V_{SS}=5V. They are given only as design guidelines and are not tested.

2. Data based on characterization results, not tested in production.

3. Any added external serial resistor will downgrade the ADC accuracy (especially for resistance greater than 10kΩ). Data based on characterization results, not tested in production.

4. The stabilization time of the AD converter is masked by the first t_{LOAD}. The first conversion after the enable is then always valid.

Figure 81. Typical Application with ADC

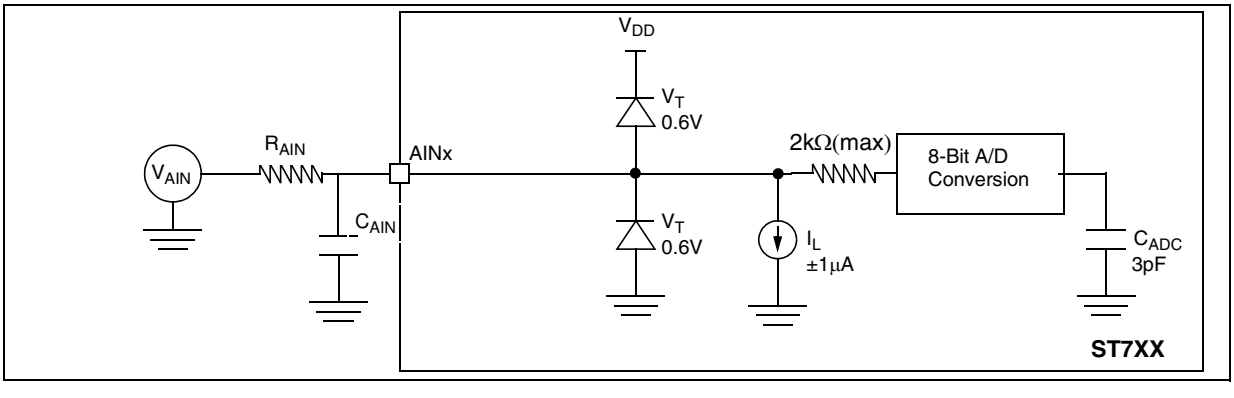

ADC CHARACTERISTICS (Cont'd)

Figure 82. R_{AIN} max. vs f_{ADC} with C_{AIN}=0pF[1)]

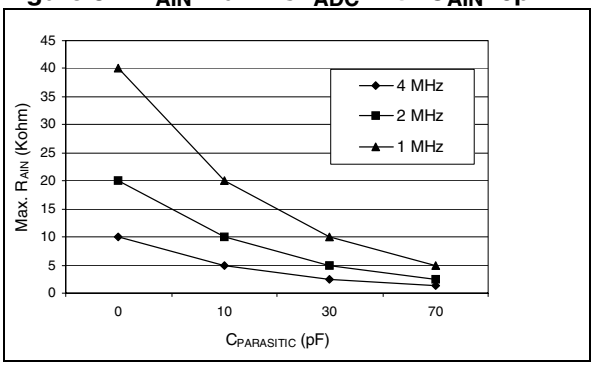

Figure 83. Recommended C_{AIN}/R_{AIN} values[2)]

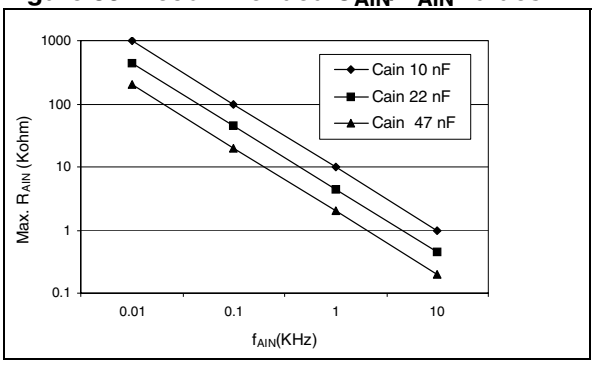

Notes:

1. $C_{PARASITIC}$ represents the capacitance of the PCB (dependent on soldering and PCB layout quality) plus the pad capacitance (3pF). A high $C_{PARASITIC}$ value will downgrade conversion accuracy. To remedy this, f_{ADC} should be reduced.

2. This graph shows that depending on the input signal variation (f_{AIN}), C_{AIN} can be increased for stabilization and to allow the use of a larger serial resistor (R_{AIN}). It is valid for all f_{ADC} frequencies ≤ 4MHz.

13.11.1 General PCB Design Guidelines

To obtain best results, some general design and layout rules should be followed when designing the application PCB to shield the noise-sensitive, analog physical interface from noise-generating CMOS logic signals.

Properly place components and route the signal traces on the PCB to shield the analog inputs. Analog signals paths should run over the analog ground plane and be as short as possible. Isolate analog signals from digital signals that may switch while the analog inputs are being sampled by the A/D converter. Do not toggle digital outputs on the same I/O port as the A/D input being converted.

ADC CHARACTERISTICS (Cont'd)

ADC Accuracy with V_{DD}=5.0V

T_A = -40°C to 85°C, unless otherwise specified

Symbol	Parameter	Conditions	Typ	Max	Unit
E_T	Total unadjusted error [2]	f_{CPU}=4MHz, f_{ADC}=2MHz, V_{DD}=5.0V	±1		LSB
E_O	Offset error [2]			-0.5 / +1	
E_G	Gain Error [2]			±1	
E_D	Differential linearity error [2]			±1 [1]	
E_L	Integral linearity error [2]			±1 [1]	
E_T	Total unadjusted error [2]	f_{CPU}=8MHz, f_{ADC}=4MHz, V_{DD}=5.0V	±2		LSB
E_O	Offset error [2]			-0.5 / 3.5	
E_G	Gain Error [2]			-2 / 0	
E_D	Differential linearity error [2]			±1 [1]	
E_L	Integral linearity error [2]			±1 [1]	

Notes:

1. Data based on characterization results over the whole temperature range, monitored in production.

2. Injecting negative current on any of the analog input pins significantly reduces the accuracy of any conversion being performed on any analog input.
Analog pins can be protected against negative injection by adding a Schottky diode (pin to ground). Injecting negative current on digital input pins degrades ADC accuracy especially if performed on a pin close to the analog input pins.
Any positive injection current within the limits specified for $I_{INJ(PIN)}$ and $\Sigma I_{INJ(PIN)}$ in does not affect the ADC accuracy.

–

ADC CHARACTERISTICS (Cont'd)

Figure 84. ADC Accuracy Characteristics with Amplifier disabled

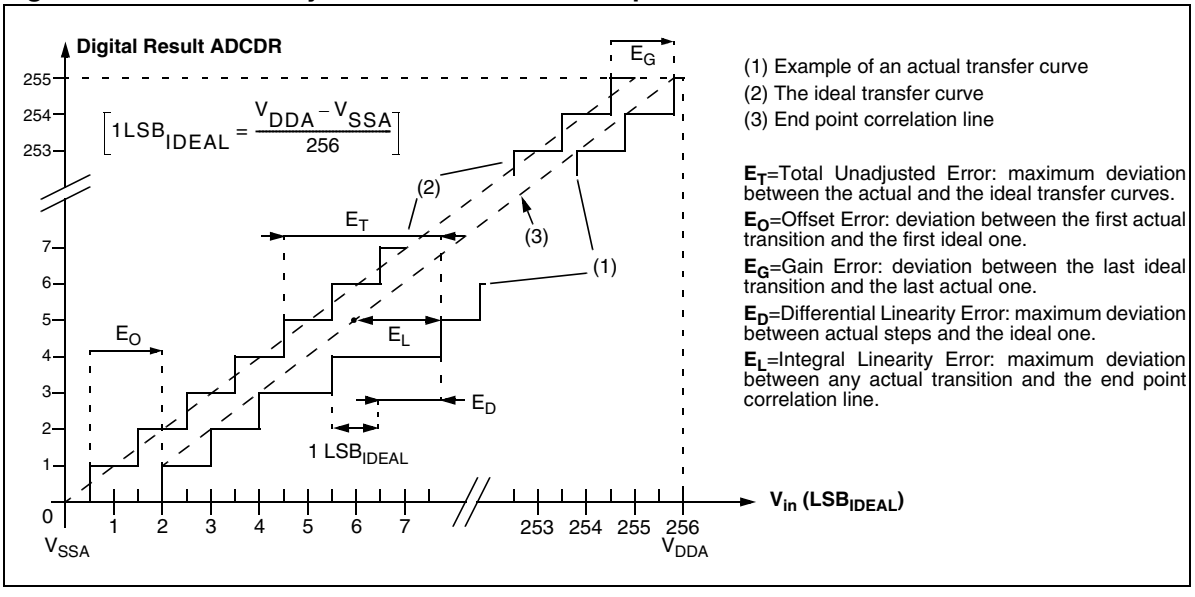

Figure 85. ADC Accuracy Characteristics with Amplifier enabled

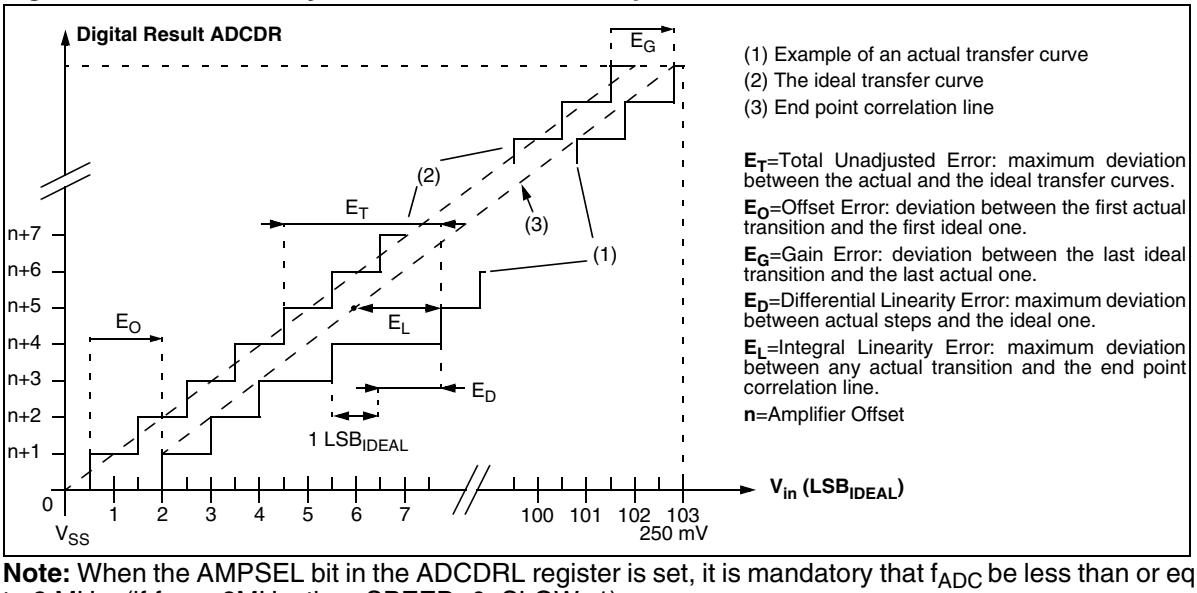

Note: When the AMPSEL bit in the ADCDRL register is set, it is mandatory that f_{ADC} be less than or equal to 2 MHz. (if f_{CPU}=8MHz. then SPEED=0, SLOW=1).

ADC CHARACTERISTICS (Cont'd)

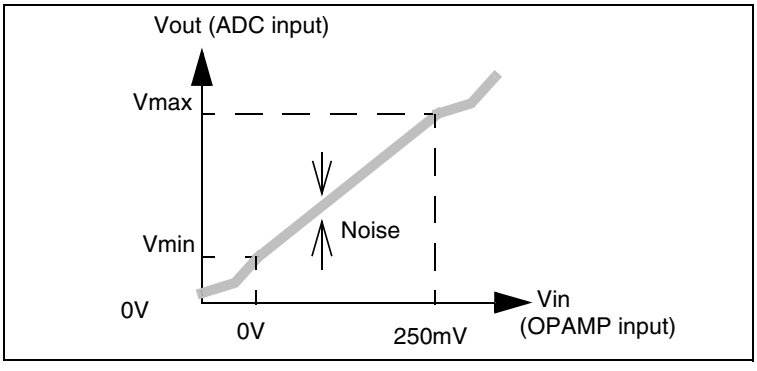

Symbol	Parameter	Conditions	Min	Typ	Max	Unit
$V_{DD(AMP)}$	Amplifier operating voltage		4.5		5.5	V
V_{IN}	Amplifier input voltage	V_{DD}=5V	0		250	mV
V_{OFFSET}	Amplifier offset voltage			200		mV
V_{STEP}	Step size for monotonicity[3)]		5			mV
Linearity	Output Voltage Response		Linear			
Gain factor	Amplified Analog input Gain[2)]		7[1)]	8	9[1)]	
Vmax	Output Linearity Max Voltage	V_{INmax} = 250mV, V_{DD}=5V		2.2	2.4	V
Vmin	Output Linearity Min Voltage			200		mV

Notes:

1. Data based on characterization results over the whole temperature range, not tested in production.

2. For precise conversion results it is recommended to calibrate the amplifier at the following two points:

– offset at V_{INmin} = 0V

– gain at full scale (for example V_{IN}=250mV)

3. Monotonicity guaranteed if V_{IN} increases or decreases in steps of min. 5mV.

14 PACKAGE CHARACTERISTICS

In order to meet environmental requirements, ST offers these devices in ECOPACK® packages. These packages have a Lead-free second level interconnect. The category of second Level Interconnect is marked on the package and on the inner box label, in compliance with JEDEC Standard JESD97. The maximum ratings related to soldering conditions are also marked on the inner box label.

ECOPACK is an ST trademark. ECOPACK specifications are available at: www.st.com.

14.1 PACKAGE MECHANICAL DATA

Figure 86. 20-Lead Very thin Fine pitch Quad Flat No-Lead Package

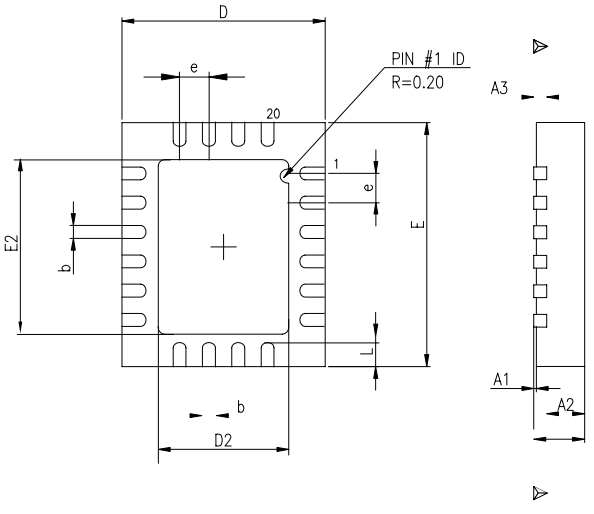

Dim.	mm			inches[1)]		
	Min	Typ	Max	Min	Typ	Max
A	0.80	0.85	0.90	0.0315	0.0335	0.0354
A1	0.00	0.02	0.05		0.0008	0.0020
A3		0.02			0.0008	
b	0.25	0.30	0.35	0.0098	0.0118	0.0138
D		5.00			0.1969	
D2	3.10	3.25	3.35	0.1220	0.1280	0.1319
E		6.00			0.2362	
E2	4.10	4.25	4.35	0.1614	0.1673	0.1713
e		0.80			0.0315	
L	0.45	0.50	0.55	0.0177	0.0197	0.0217
ddd		0.08			0.0031	
	Number of Pins					
N	20					

Note 1. Values in inches are converted from mm and rounded to 4 decimal digits.

Figure 87. 16-Pin Plastic Dual In-Line Package, 300-mil Width

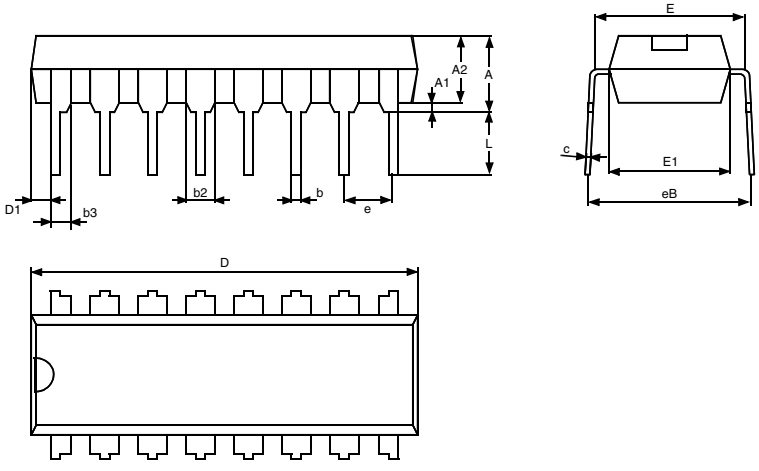

Dim	mm			inches[1)]		
	Min	Typ	Max	Min	Typ	Max
A			5.33			0.2098
A1	0.38			0.0150		
A2	2.92	3.30	4.95	0.1150	0.1299	0.1949
b	0.36	0.46	0.56	0.0142	0.0181	0.0220
b2	1.14	1.52	1.78	0.0449	0.0598	0.0701
b3	0.76	0.99	1.14	0.0299	0.0390	0.0449
c	0.20	0.25	0.36	0.0079	0.0098	0.0142
D	18.67	19.18	19.69	0.7350	0.7551	0.7752
D1	0.13			0.0051		
e		2.54			0.1000	
E	7.62	7.87	8.26	0.3000	0.3098	0.3252
E1	6.10	6.35	7.11	0.2402	0.2500	0.2799
L	2.92	3.30	3.81	0.1150	0.1299	0.1500
eB			10.92			0.4299
	Number of Pins					
N	16					

Note 1. Values in inches are converted from mm and rounded to 4 decimal digits.

Figure 88. 16-Pin Plastic Small Outline Package, 150-mil Width

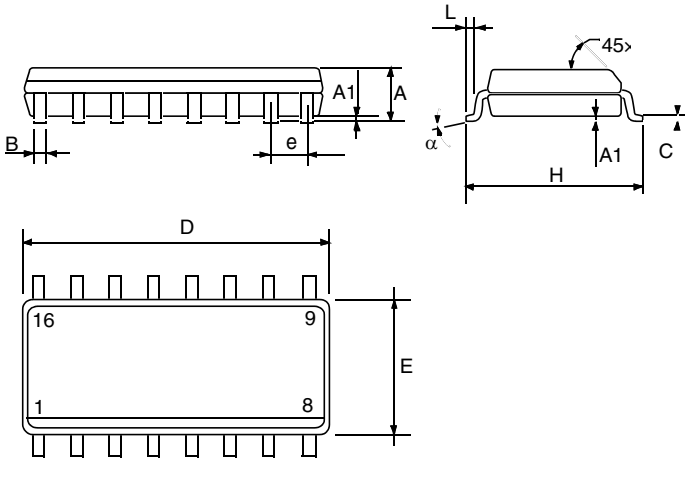

Dim.	mm			inches[1)]		
	Min	Typ	Max	Min	Typ	Max
A	1.35		1.75	0.0531		0.0689
A1	0.10		0.25	0.0039		0.0098
B	0.33		0.51	0.0130		0.0201
C	0.19		0.25	0.0075		0.0098
D	9.80		10.00	0.3858		0.3937
E	3.80		4.00	0.1496		0.1575
e		1.27			0.0500	
H	5.80		6.20	0.2283		0.2441
α	0°		8°	0°		8°
L	0.40		1.27	0.0157		0.0500
	Number of Pins					
N	16					

Note 1. Values in inches are converted from mm and rounded to 4 decimal digits.

14.2 THERMAL CHARACTERISTICS

Symbol	Ratings		Value	Unit
R_{thJA}	Package thermal resistance (junction to ambient)	SO16 DIP16	95 TBD	°C/W
T_{Jmax}	Maximum junction temperature [1]		150	°C
P_{Dmax}	Power dissipation [2]		500	mW

Notes:

1. The maximum chip-junction temperature is based on technology characteristics.

2. The maximum power dissipation is obtained from the formula $P_D = (T_J - T_A) / R_{thJA}$.

The power dissipation of an application can be defined by the user with the formula: $P_D=P_{INT}+P_{PORT}$ where P_{INT} is the chip internal power ($I_{DD}xV_{DD}$) and P_{PORT} is the port power dissipation depending on the ports used in the application.

15 DEVICE CONFIGURATION AND ORDERING INFORMATION

Each device is available for production in user programmable versions (FLASH) as well as in factory coded versions (FASTROM).

ST7PLITE0x and ST7PLITES2/S5 devices are Factory Advanced Service Technique ROM (FASTROM) versions: they are factory-programmed XFlash devices.

ST7FLITE0x and ST7FLITES2/S5 XFlash devices are shipped to customers with a default program memory content (FFh). The OSC option bit is programmed to 0 by default.

The FASTROM factory coded parts contain the code supplied by the customer. This implies that FLASH devices have to be configured by the customer using the Option Bytes while the FASTROM devices are factory-configured.

15.1 OPTION BYTES

The two option bytes allow the hardware configuration of the microcontroller to be selected.

The option bytes can be accessed only in programming mode (for example using a standard ST7 programming tool).

OPTION BYTE 0

Bits 7:4 = Reserved, must always be 1.

Bits 3:2 = **SEC[1:0]** *Sector 0 size definition*
These option bits indicate the size of sector 0 according to the following table.

Sector 0 Size	SEC1	SEC0
0.5k	0	0
1k	0	1
1.5k [1)]	1	x

Note 1: Configuration available for ST7LITE0x devices only.

Bit 1 = **FMP_R** *Read-out protection*
Readout protection, when selected provides a protection against program memory content extraction and against write access to Flash memory. Erasing the option bytes when the FMP_R option is selected will cause the whole memory to be erased first, and the device can be reprogrammed. Refer to and the ST7 Flash Programming Reference Manual for more details.

0: Read-out protection off
1: Read-out protection on

Bit 0 = **FMP_W** *FLASH write protection*
This option indicates if the FLASH program memory is write protected.
Warning: When this option is selected, the program memory (and the option bit itself) can never be erased or programmed again.
0: Write protection off
1: Write protection on

OPTION BYTES (Cont'd)

OPTION BYTE 1

Bit 7 = **PLLx4x8** *PLL Factor selection.*
0: PLLx4
1: PLLx8

Bit 6 = **PLLOFF** *PLL disabled*
0: PLL enabled
1: PLL disabled (by-passed)

Bit 5 = Reserved, must always be 1.

Bit 4 = **OSC** *RC Oscillator selection*
0: RC oscillator on
1: RC oscillator off

Note: If the RC oscillator is selected, then to improve clock stability and frequency accuracy, it is recommended to place a decoupling capacitor, typically 100nF, between the V_{DD} and V_{SS} pins as close as possible to the ST7 device.

Table 21. List of valid option combinations

Operating conditions				Option Bits		
V_{DD} range	Clock Source	PLL	Typ f_{CPU}	OSC	PLLOFF	PLLx4x8
2.4V - 3.3V	Internal RC 1%	off	0.7MHz @3V	0	1	1
		x4	2.8MHz @3V	0	0	0
		x8	-	-	-	-
	External clock	off	0-4MHz	1	1	1
		x4	4MHz	1	0	0
		x8	-	-	-	-
3.3V - 5.5V	Internal RC 1%	off	1MHz @5V	0	1	1
		x4	-	-	-	-
		x8	8MHz @5V	0	0	1
	External clock	off	0-8MHz	1	1	1
		x4	-	-	-	-
		x8	8 MHz	1	0	1

Note: see Clock Management Block diagram in

Bits 3:2 = **LVD[1:0]** *Low voltage detection selection*
These option bits enable the LVD block with a selected threshold as shown in .

Table 22. LVD Threshold Configuration

Configuration	LVD1	LVD0
LVD Off	1	1
Highest Voltage Threshold (~4.1V)	1	0
Medium Voltage Threshold (~3.5V)	0	1
Lowest Voltage Threshold (~2.8V)	0	0

Bit 1 = **WDG SW** *Hardware or software watchdog*
This option bit selects the watchdog type.
0: Hardware (watchdog always enabled)
1: Software (watchdog to be enabled by software)

Bit 0 = **WDG HALT** *Watchdog Reset on Halt*
This option bit determines if a RESET is generated when entering HALT mode while the Watchdog is active.
0: No Reset generation when entering Halt mode
1: Reset generation when entering Halt mode

	OPTION BYTE 0								OPTION BYTE 1							
	7							0	7							0
	Reserved				SEC1	SEC0	FMP R	FMP W	PLL x4x8	PLL OFF		OSC	LVD1	LVD0	WDG SW	WDG HALT
Default Value	1	1	1	1	1	1	0	0	1	1	1	0	1	1	1	1

15.2 DEVICE ORDERING INFORMATION AND TRANSFER OF CUSTOMER CODE

Customer code is made up of the FASTROM contents and the list of the selected options (if any). The FASTROM contents are to be sent on diskette, or by electronic means, with the S19 hexadecimal file generated by the development tool. All unused bytes must be set to FFh. The selected options are communicated to STMicroelectronics using the correctly completed OPTION LIST appended.

Refer to application note AN1635 for information on the counter listing returned by ST after code has been transferred.

The STMicroelectronics Sales Organization will be pleased to provide detailed information on contractual points.

Figure 89. Ordering information scheme

Example: ST7 F LITES5 Y 0 M 6 TR

Family

ST7 Microcontroller Family

Memory type

F: Flash
P: FASTROM

Sub-family

LITES2, LITES5, LITE02, LITE05 or LITE09

No. of pins

Y = 16

Memory size

0 = 1K (LITESx versions) or 1.5K (LITE0x versions)

Package

B = DIP
M = SO
U = QFN

Temperature range

6 = -40 °C to 85 °C

Shipping Option

TR = Tape & Reel packing
Blank = Tube (DIP16 or SO16) or Tray (QFN20)

For a list of available options (e.g. data EEPROM, package) and orderable part numbers or for further information on any aspect of this device, please contact the ST Sales Office nearest to you.

ST7LITE0xY0 AND ST7LITESxY0 FASTROM MICROCONTROLLER OPTION LIST
(Last update: November 2007)

Customer . . . . . .
Address . . . . . .
. . . . . .
Contact . . . . . .
Phone No . . . . . .
Reference/FASTROM Code*: . . . . . .
*FASTROM code name is assigned by STMicroelectronics.
FASTROM code must be sent in .S19 format. .Hex extension cannot be processed.

Memory size (check only one option): [ ] 1 K [ ] 1.5 K

Device type (check only one option): [ ] ST7PLITES2Y0 [ ] ST7PLITES5Y0
[ ] ST7PLITE02Y0 [ ] ST7PLITE05Y0 [ ] ST7PLITE09Y0

Warning: Addresses 1000h, 1001h, FFDEh and FFDFh are reserved areas for ST to program RCCR0 and RCCR1 (see).

Conditioning (check only one option):

PDIP16	[ ] Tube	
SO16	[ ] Tape & Reel	[ ] Tube
QFN20	[ ] Tape & Reel	[ ] Tray

Special Marking: [ ] No [ ] Yes
Authorized characters are letters, digits, '.', '-', '/' and spaces only.
Maximum character count: PDIP16 (15 char. max) : _ _ _ _ _ _ _ _ _ _ _ _ _ _ _
SO16 (11 char. max) : _ _ _ _ _ _ _ _ _ _ _

Sector 0 size:	[ ] 0.5K	[ ] 1K	[ ] 1.5K
Readout Protection:	[ ] Disabled	[ ] Enabled	
FLASH write Protection:	[ ] Disabled	[ ] Enabled	
Clock Source Selection:	[ ] Internal RC	[ ] External Clock	
PLL	[ ] Disabled	[ ] PLLx4	[ ] PLLx8
LVD Reset	[ ] Disabled	[ ] Highest threshold [ ] Medium threshold [ ] Lowest threshold	
Watchdog Selection:	[ ] Software Activation		[ ] Hardware Activation
Watchdog Reset on Halt:	[ ] Disabled		[ ] Enabled

Comments : . . . . . .
Supply Operating Range in the application: . . . . . .
Notes . . . . . .

Date: . . . . . .

Signature: . . . . . .
Important note: Not all configurations are available. See on for authorized option byte combinations and “Ordering information scheme” on page 115.

Please download the latest version of this option list from:

15.3 DEVELOPMENT TOOLS

Development tools for the ST7 microcontrollers include a complete range of hardware systems and software tools from STMicroelectronics and third-party tool suppliers. The range of tools includes solutions to help you evaluate microcontroller peripherals, develop and debug your application, and program your microcontrollers.

15.3.1 Starter kits

ST offers complete, affordable **starter kits**. Starter kits are complete, affordable hardware/software tool packages that include features and samples to help you quickly start developing your application.

15.3.2 Development and debugging tools

Application development for ST7 is supported by fully optimizing **C Compilers** and the **ST7 Assembler-Linker** toolchain, which are all seamlessly integrated in the ST7 integrated development environments in order to facilitate the debugging and fine-tuning of your application. The Cosmic C Compiler is available in a free version that outputs up to 16KBytes of code.

The range of hardware tools includes full-featured **ST7-EMU3 series emulators**, cost effective **ST7-DVP3 series emulators** and the low-cost **RLink** in-circuit debugger/programmer. These tools are supported by the **ST7 Toolset** from STMicroelectronics, which includes the STVD7 integrated development environment (IDE) with high-level language debugger, editor, project manager and integrated programming interface.

15.3.3 Programming tools

During the development cycle, the **ST7-DVP3** and **ST7-EMU3 series emulators** and the **RLink** provide in-circuit programming capability for programming the Flash microcontroller on your application board.

ST also provides a low-cost dedicated in-circuit programmer, the **ST7-STICK**, as well as **ST7 Socket Boards** which provide all the sockets required for programming any of the devices in a specific ST7 sub-family on a platform that can be used with any tool with in-circuit programming capability for ST7.

For production programming of ST7 devices, ST's third-party tool partners also provide a complete range of gang and automated programming solutions, which are ready to integrate into your production environment.

15.3.4 Order Codes for Development and Programming Tools

below lists the ordering codes for the ST7LITE0/ST7LITES development and programming tools. For additional ordering codes for spare parts and accessories, refer to the online product selector at www.st.com/mcu.

15.3.5 Order codes for ST7LITE0/ST7LITES development tools

Table 23. Development tool order codes for the ST7LITE0/ST7LITES family

MCU	In-circuit Debugger, RLink Series[1]		Emulator		Programming Tool	
	Starter Kit without Demo Board	Starter Kit with Demo Board	DVP Series	EMU Series	In-circuit Programmer	ST Socket Boards and EPBs
ST7FLITE02, ST7FLITE05, ST7FLITE09, ST7FLITES2, ST7FLITES5	STX-RLINK[2]	ST7FLITE-SK/RAIS[2]	ST7MDT10-DVP3[3]	ST7MDT10-EMU3	STX-RLINK ST7-STICK[4][5]	ST7SB10-SU0[4]

Notes:

1. Available from ST or from Raisonance, www.raisonance.com
2. USB connection to PC
3. Includes connection kit for DIP16/SO16 only. See "How to order an EMU or DVP" in ST product and tool selection guide for connection kit ordering information
4. Add suffix /EU, /UK or /US for the power supply for your region
5. Parallel port connection to PC

15.4 ST7 APPLICATION NOTES

Table 24. ST7 Application Notes

IDENTIFICATION	DESCRIPTION
APPLICATION EXAMPLES	
AN1658	SERIAL NUMBERING IMPLEMENTATION
AN1720	MANAGING THE READ-OUT PROTECTION IN FLASH MICROCONTROLLERS
AN1755	A HIGH RESOLUTION/PRECISION THERMOMETER USING ST7 AND NE555
AN1756	CHOOSING A DALI IMPLEMENTATION STRATEGY WITH ST7DALI
AN1812	A HIGH PRECISION, LOW COST, SINGLE SUPPLY ADC FOR POSITIVE AND NEGATIVE INPUT VOLTAGES
EXAMPLE DRIVERS	
AN 969	SCI COMMUNICATION BETWEEN ST7 AND PC
AN 970	SPI COMMUNICATION BETWEEN ST7 AND EEPROM
AN 971	I²C COMMUNICATION BETWEEN ST7 AND M24CXX EEPROM
AN 972	ST7 SOFTWARE SPI MASTER COMMUNICATION
AN 973	SCI SOFTWARE COMMUNICATION WITH A PC USING ST72251 16-BIT TIMER
AN 974	REAL TIME CLOCK WITH ST7 TIMER OUTPUT COMPARE
AN 976	DRIVING A BUZZER THROUGH ST7 TIMER PWM FUNCTION
AN 979	DRIVING AN ANALOG KEYBOARD WITH THE ST7 ADC
AN 980	ST7 KEYPAD DECODING TECHNIQUES, IMPLEMENTING WAKE-UP ON KEYSTROKE
AN1017	USING THE ST7 UNIVERSAL SERIAL BUS MICROCONTROLLER
AN1041	USING ST7 PWM SIGNAL TO GENERATE ANALOG OUTPUT (SINUSOÏD)
AN1042	ST7 ROUTINE FOR I²C SLAVE MODE MANAGEMENT
AN1044	MULTIPLE INTERRUPT SOURCES MANAGEMENT FOR ST7 MCUS
AN1045	ST7 S/W IMPLEMENTATION OF I²C BUS MASTER
AN1046	UART EMULATION SOFTWARE
AN1047	MANAGING RECEPTION ERRORS WITH THE ST7 SCI PERIPHERALS
AN1048	ST7 SOFTWARE LCD DRIVER
AN1078	PWM DUTY CYCLE SWITCH IMPLEMENTING TRUE 0% & 100% DUTY CYCLE
AN1082	DESCRIPTION OF THE ST72141 MOTOR CONTROL PERIPHERALS REGISTERS
AN1083	ST72141 BLDC MOTOR CONTROL SOFTWARE AND FLOWCHART EXAMPLE
AN1105	ST7 PCAN PERIPHERAL DRIVER
AN1129	PWM MANAGEMENT FOR BLDC MOTOR DRIVES USING THE ST72141
AN1130	AN INTRODUCTION TO SENSORLESS BRUSHLESS DC MOTOR DRIVE APPLICATIONS WITH THE ST72141
AN1148	USING THE ST7263 FOR DESIGNING A USB MOUSE
AN1149	HANDLING SUSPEND MODE ON A USB MOUSE
AN1180	USING THE ST7263 KIT TO IMPLEMENT A USB GAME PAD
AN1276	BLDC MOTOR START ROUTINE FOR THE ST72141 MICROCONTROLLER
AN1321	USING THE ST72141 MOTOR CONTROL MCU IN SENSOR MODE
AN1325	USING THE ST7 USB LOW-SPEED FIRMWARE V4.X
AN1445	EMULATED 16-BIT SLAVE SPI
AN1475	DEVELOPING AN ST7265X MASS STORAGE APPLICATION
AN1504	STARTING A PWM SIGNAL DIRECTLY AT HIGH LEVEL USING THE ST7 16-BIT TIMER
AN1602	16-BIT TIMING OPERATIONS USING ST7262 OR ST7263B ST7 USB MCUS
AN1633	DEVICE FIRMWARE UPGRADE (DFU) IMPLEMENTATION IN ST7 NON-USB APPLICATIONS
AN1712	GENERATING A HIGH RESOLUTION SINEWAVE USING ST7 PWMART
AN1713	SMBUS SLAVE DRIVER FOR ST7 I2C PERIPHERALS
AN1753	SOFTWARE UART USING 12-BIT ART

Table 24. ST7 Application Notes

IDENTIFICATION	DESCRIPTION
AN1947	ST7MC PMAC SINE WAVE MOTOR CONTROL SOFTWARE LIBRARY
GENERAL PURPOSE	
AN1476	LOW COST POWER SUPPLY FOR HOME APPLIANCES
AN1526	ST7FLITE0 QUICK REFERENCE NOTE
AN1709	EMC DESIGN FOR ST MICROCONTROLLERS
AN1752	ST72324 QUICK REFERENCE NOTE
PRODUCT EVALUATION	
AN 910	PERFORMANCE BENCHMARKING
AN 990	ST7 BENEFITS VS INDUSTRY STANDARD
AN1077	OVERVIEW OF ENHANCED CAN CONTROLLERS FOR ST7 AND ST9 MCUS
AN1086	U435 CAN-DO SOLUTIONS FOR CAR MULTIPLEXING
AN1103	IMPROVED B-EMF DETECTION FOR LOW SPEED, LOW VOLTAGE WITH ST72141
AN1150	BENCHMARK ST72 VS PC16
AN1151	PERFORMANCE COMPARISON BETWEEN ST72254 & PC16F876
AN1278	LIN (LOCAL INTERCONNECT NETWORK) SOLUTIONS
PRODUCT MIGRATION	
AN1131	MIGRATING APPLICATIONS FROM ST72511/311/214/124 TO ST72521/321/324
AN1322	MIGRATING AN APPLICATION FROM ST7263 REV.B TO ST7263B
AN1365	GUIDELINES FOR MIGRATING ST72C254 APPLICATIONS TO ST72F264
AN1604	HOW TO USE ST7MDT1-TRAIN WITH ST72F264
AN2200	GUIDELINES FOR MIGRATING ST7LITE1X APPLICATIONS TO ST7FLITE1XB
PRODUCT OPTIMIZATION	
AN 982	USING ST7 WITH CERAMIC RESONATOR
AN1014	HOW TO MINIMIZE THE ST7 POWER CONSUMPTION
AN1015	SOFTWARE TECHNIQUES FOR IMPROVING MICROCONTROLLER EMC PERFORMANCE
AN1040	MONITORING THE VBUS SIGNAL FOR USB SELF-POWERED DEVICES
AN1070	ST7 CHECKSUM SELF-CHECKING CAPABILITY
AN1181	ELECTROSTATIC DISCHARGE SENSITIVE MEASUREMENT
AN1324	CALIBRATING THE RC OSCILLATOR OF THE ST7FLITE0 MCU USING THE MAINS
AN1502	EMULATED DATA EEPROM WITH ST7 HDFLASH MEMORY
AN1529	EXTENDING THE CURRENT & VOLTAGE CAPABILITY ON THE ST7265 VDDF SUPPLY
AN1530	ACCURATE TIMEBASE FOR LOW-COST ST7 APPLICATIONS WITH INTERNAL RC OSCILLATOR
AN1605	USING AN ACTIVE RC TO WAKEUP THE ST7LITE0 FROM POWER SAVING MODE
AN1636	UNDERSTANDING AND MINIMIZING ADC CONVERSION ERRORS
AN1828	PIR (PASSIVE INFRARED) DETECTOR USING THE ST7FLITE05/09/SUPERLITE
AN1946	SENSORLESS BLDC MOTOR CONTROL AND BEMF SAMPLING METHODS WITH ST7MC
AN1953	PFC FOR ST7MC STARTER KIT
AN1971	ST7LITE0 MICROCONTROLLED BALLAST
PROGRAMMING AND TOOLS	
AN 978	ST7 VISUAL DEVELOP SOFTWARE KEY DEBUGGING FEATURES
AN 983	KEY FEATURES OF THE COSMIC ST7 C-COMPILER PACKAGE
AN 985	EXECUTING CODE IN ST7 RAM
AN 986	USING THE INDIRECT ADDRESSING MODE WITH ST7
AN 987	ST7 SERIAL TEST CONTROLLER PROGRAMMING
AN 988	STARTING WITH ST7 ASSEMBLY TOOL CHAIN
AN1039	ST7 MATH UTILITY ROUTINES

Table 24. ST7 Application Notes

IDENTIFICATION	DESCRIPTION
AN1071	HALF DUPLEX USB-TO-SERIAL BRIDGE USING THE ST72611 USB MICROCONTROLLER
AN1106	TRANSLATING ASSEMBLY CODE FROM HC05 TO ST7
AN1179	PROGRAMMING ST7 FLASH MICROCONTROLLERS IN REMOTE ISP MODE (IN-SITU PROGRAMMING)
AN1446	USING THE ST72521 EMULATOR TO DEBUG AN ST72324 TARGET APPLICATION
AN1477	EMULATED DATA EEPROM WITH XFLASH MEMORY
AN1527	DEVELOPING A USB SMARTCARD READER WITH ST7SCR
AN1575	ON-BOARD PROGRAMMING METHODS FOR XFLASH AND HDFLASH ST7 MCUS
AN1576	IN-APPLICATION PROGRAMMING (IAP) DRIVERS FOR ST7 HDFLASH OR XFLASH MCUS
AN1577	DEVICE FIRMWARE UPGRADE (DFU) IMPLEMENTATION FOR ST7 USB APPLICATIONS
AN1601	SOFTWARE IMPLEMENTATION FOR ST7DALI-EVAL
AN1603	USING THE ST7 USB DEVICE FIRMWARE UPGRADE DEVELOPMENT KIT (DFU-DK)
AN1635	ST7 CUSTOMER ROM CODE RELEASE INFORMATION
AN1754	DATA LOGGING PROGRAM FOR TESTING ST7 APPLICATIONS VIA ICC
AN1796	FIELD UPDATES FOR FLASH BASED ST7 APPLICATIONS USING A PC COMM PORT
AN1900	HARDWARE IMPLEMENTATION FOR ST7DALI-EVAL
AN1904	ST7MC THREE-PHASE AC INDUCTION MOTOR CONTROL SOFTWARE LIBRARY
AN1905	ST7MC THREE-PHASE BLDC MOTOR CONTROL SOFTWARE LIBRARY
SYSTEM OPTIMIZATION	
AN1711	SOFTWARE TECHNIQUES FOR COMPENSATING ST7 ADC ERRORS
AN1827	IMPLEMENTATION OF SIGMA-DELTA ADC WITH ST7FLITE05/09
AN2009	PWM MANAGEMENT FOR 3-PHASE BLDC MOTOR DRIVES USING THE ST7FMC
AN2030	BACK EMF DETECTION DURING PWM ON TIME BY ST7MC

16 KNOWN LIMITATIONS

16.1 Execution of BTJX Instruction

Description

Executing a BTJx instruction jumps to a random address in the following conditions: the jump goes to a lower address (jump backward) and the test is performed on a data located at the address 00FFh.

16.2 In-Circuit Programming of devices previously programmed with Hardware Watchdog option

Description

In-Circuit Programming of devices configured with Hardware Watchdog (WDGSW bit in option byte 1 programmed to 0) requires certain precautions (see below).

In-Circuit Programming uses ICC mode. In this mode, the Hardware Watchdog is not automatically deactivated as one might expect. As a consequence, internal resets are generated every 2 ms by the watchdog, thus preventing programming.

The device factory configuration is Software Watchdog so this issue is not seen with devices that are programmed for the first time. For the same reason, devices programmed by the user with the Software Watchdog option are not impacted.

The only devices impacted are those that have previously been programmed with the Hardware Watchdog option.

Workaround

Devices configured with Hardware Watchdog must be programmed using a specific programming mode that ignores the option byte settings. In this mode, an external clock, normally provided by the programming tool, has to be used. In ST tools, this mode is called "ICP OPTIONS DISABLED".

Sockets on ST programming tools (such as ST7MDT10-EPB) are controlled using "ICP OPTIONS DISABLED" mode. Devices can therefore be reprogrammed by plugging them in the ST Programming Board socket, whatever the watchdog configuration.

When using third-party tools, please refer the manufacturer's documentation to check how to access specific programming modes. If a tool does not have a mode that ignores the option byte settings, devices programmed with the Hardware watchdog option cannot be reprogrammed using this tool.

16.3 In-Circuit Debugging with Hardware Watchdog

In Circuit Debugging is impacted in the same way as In Circuit Programming by the activation of the hardware watchdog in ICC mode. Please refer to .

16.4 Recommendations when LVD is enabled

When the LVD is enabled, it is recommended not to connect a pull-up resistor or capacitor. A 10nF pull-down capacitor is required to filter noise on the reset line.

16.5 Clearing Active Interrupts Outside Interrupt Routine

When an active interrupt request occurs at the same time as the related flag or interrupt mask is being cleared, the CC register may be corrupted.

Concurrent interrupt context

The symptom does not occur when the interrupts are handled normally, i.e. when:

– The interrupt request is cleared (flag reset or interrupt mask) within its own interrupt routine

– The interrupt request is cleared (flag reset or interrupt mask) within any interrupt routine

– The interrupt request is cleared (flag reset or interrupt mask) in any part of the code while this interrupt is disabled

If these conditions are not met, the symptom can be avoided by implementing the following sequence:

Perform SIM and RIM operation before and after resetting an active interrupt request

Ex:

SIM

reset flag or interrupt mask

RIM

17 REVISION HISTORY

Table 25. Revision History

Date	Revision	Description of changes
27-Oct-04	3	Revision number incremented from 2.5 to 3.0 due to Internal Document Management System change Changed all references of ADCDAT to ADCDR Added EMU3 Emulator Programming Capability in Clarification of read-out protection Altered note 1 for removing references to $\overline{RESET}$ Alteration of f_{CPU} for SLOW and SLOW-WAIT modes in table and on page 90 Removed sentence relating to an effective change only after overflow for CK[1:0], Added illegal opcode detection to page 1, , Clarification of Flash read-out protection, f_{PLL} value of 1MHz quoted as Typical instead of a Minimum in Updated F_{SCK} in to $F_{CPU}/4$ and $F_{CPU}/2$: Changed wording in AVDIE and AVDF bit descriptions to “...when the AVDF bit is set” Socket Board development kit details added in PWM Signal diagram corrected, Corrected count of reserved bits between 003Bh to 007Fh, Inserted note that RCCR0 and RCCR1 are erased if read-only flag is reset, page 24
21-July-06	4	Added QFN20 package Modified Changed Read operation paragraph in Modified note below and modified Modified note to Added note on illegal opcode reset to Added note 2 to EICR description on Modified External Interrupt Function in Changed text on input capture before Modified text in Added important note in Changed note 1 in Modified values in Modified note 2 in and Added note on clock stability and frequency accuracy to , 13.3.4.2 on page 86, and to OSC option bit in on 113 Changed I_S value and note 2 in Added note in Changed and removed EMC protection circuitry in 101 (device works correctly without these components) Changed ($t_{su(\overline{SS})}$, $t_{v(MO)}$ and $t_{h(MO)}$) Modified (CPHA=1) and ($t_{v(MO)}$, $t_{h(MO)}$) Added ECOPACK information to Modified (A1 and A swapped in the diagram) Modified Modified Updated option list on Changed Removed erratasheet section Added and
		Revision History continued overleaf ...

09-Oct-06	5	Removed QFN20 pinout and mechanical data. Modified text in External Interrupt Function section in Modified (and QFN20 rows in grey). Added “External Clock Source” on page 91 and Modified description of CNTR[11:0] bits in Updated option list on Changed
19-Nov-07	6	Title of the document modified Modified LOCKED bit description in In and , note “negative injection not allowed on PB0 and PB1 pins” replaced by “negative injection not allowed on PB1 pin” Added QFN20 package pinout (with new QFN20 mechanical data): and Modified Removed one note in Modified Modified “PACKAGE MECHANICAL DATA” on page 109 (values in inches rounded to 4 decimal digits) Modified (“Ordering information scheme” on page 115 added and table removed) and option list on Removed “soldering information” section Modified

Notes:

Please Read Carefully:

Information in this document is provided solely in connection with ST products. STMicroelectronics NV and its subsidiaries (“ST”) reserve the right to make changes, corrections, modifications or improvements, to this document, and the products and services described herein at any time, without notice.

All ST products are sold pursuant to ST’s terms and conditions of sale.

Purchasers are solely responsible for the choice, selection and use of the ST products and services described herein, and ST assumes no liability whatsoever relating to the choice, selection or use of the ST products and services described herein.

No license, express or implied, by estoppel or otherwise, to any intellectual property rights is granted under this document. If any part of this document refers to any third party products or services it shall not be deemed a license grant by ST for the use of such third party products or services, or any intellectual property contained therein or considered as a warranty covering the use in any manner whatsoever of such third party products or services or any intellectual property contained therein.

UNLESS OTHERWISE SET FORTH IN ST’S TERMS AND CONDITIONS OF SALE ST DISCLAIMS ANY EXPRESS OR IMPLIED WARRANTY WITH RESPECT TO THE USE AND/OR SALE OF ST PRODUCTS INCLUDING WITHOUT LIMITATION IMPLIED WARRANTIES OF MERCHANTABILITY, FITNESS FOR A PARTICULAR PURPOSE (AND THEIR EQUIVALENTS UNDER THE LAWS OF ANY JURISDICTION), OR INFRINGEMENT OF ANY PATENT, COPYRIGHT OR OTHER INTELLECTUAL PROPERTY RIGHT.

UNLESS EXPRESSLY APPROVED IN WRITING BY AN AUTHORIZED ST REPRESENTATIVE, ST PRODUCTS ARE NOT RECOMMENDED, AUTHORIZED OR WARRANTED FOR USE IN MILITARY, AIR CRAFT, SPACE, LIFE SAVING, OR LIFE SUSTAINING APPLICATIONS, NOR IN PRODUCTS OR SYSTEMS WHERE FAILURE OR MALFUNCTION MAY RESULT IN PERSONAL INJURY, DEATH, OR SEVERE PROPERTY OR ENVIRONMENTAL DAMAGE. ST PRODUCTS WHICH ARE NOT SPECIFIED AS "AUTOMOTIVE GRADE" MAY ONLY BE USED IN AUTOMOTIVE APPLICATIONS AT USER’S OWN RISK.

Resale of ST products with provisions different from the statements and/or technical features set forth in this document shall immediately void any warranty granted by ST for the ST product or service described herein and shall not create or extend in any manner whatsoever, any liability of ST.

ST and the ST logo are trademarks or registered trademarks of ST in various countries.

Information in this document supersedes and replaces all information previously supplied.

The ST logo is a registered trademark of STMicroelectronics. All other names are the property of their respective owners.

© 2007 STMicroelectronics - All rights reserved

STMicroelectronics group of companies

Australia - Belgium - Brazil - Canada - China - Czech Republic - Finland - France - Germany - Hong Kong - India - Israel - Italy - Japan - Malaysia - Malta - Morocco - Singapore - Spain - Sweden - Switzerland - United Kingdom - United States of America

www.st.com